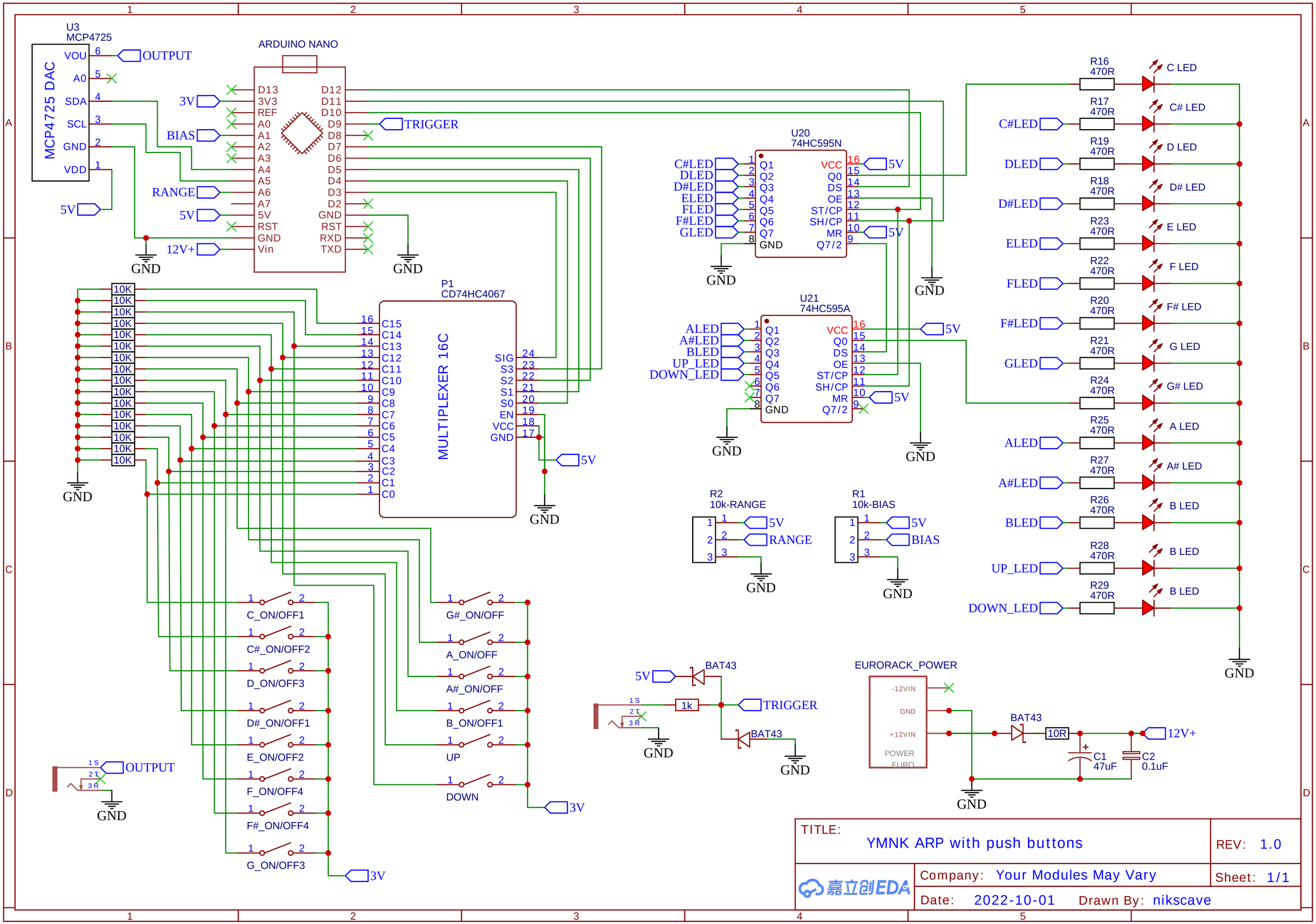
U3
MCP4725
MCP4725 DAC
VOU
A0
SDA
SCL
GND
VDD
OUTPUT
5V
ARDUINO NANO
D13
3V3
REF
A0
A1
A2
A3
A4
A5
A6
A7
5V
RST
GND
Vin
D12
D11
D10
D9
D8
D7
D6
D5
D4
D3
D2
GND
RST
RXD
TXD
3V
BIAS
RANGE
5V
12V+
TRIGGER
GND
P1
CD74HC4067
MULTIPLEXER 16C
SIG
S3
S2
S1
S0
EN
VCC
GND
C15
C14
C13
C12
C11
C10
C9
C8
C7
C6
C5
C4
C3
C2
C1
C0
10K
U20
74HC595N
U21
74HC595A
Q1
Q2
Q3
Q4
Q5
Q6
Q7
GND
VCC
Q0
DS
OE
ST/CP
SH/CP
MR
Q7/2
C#LED
DLED
D#LED
ELED
FLED
F#LED
GLED
ALED
A#LED
BLED
UP_LED
DOWN_LED
R16 470R
R17 470R
R19 470R
R18 470R
R23 470R
R22 470R
R20 470R
R21 470R
R24 470R
R25 470R
R27 470R
R26 470R
R28 470R
R29 470R
C LED
C# LED
D LED
D# LED
E LED
F LED
F# LED
G LED
G# LED
A LED
A# LED
B LED
R2
10k-RANGE
R1
10k-BIAS
C_ON/OFF1
C#_ON/OFF2
D_ON/OFF3
D#_ON/OFF1
E_ON/OFF2
F_ON/OFF4
F#_ON/OFF4
G_ON/OFF3
G#_ON/OFF
A_ON/OFF
A#_ON/OFF
B_ON/OFF1
UP
DOWN
BAT43
1k
EURORACK_POWER
-12VIN
GND
+12VIN
POWER
EURO
10R
C1
47uF
C2
0.1uF
12V+
TITLE:
YMNK ARP with push buttons
REV: 1.0
Company: Your Modules May Vary
Sheet: 1/1
Date: 2022-10-01
Drawn By: nikscave
嘉立创EDA