# RADIAL DISTRIBUTION TEST FEEDERS

IEEE Distribution Planning Working Group Report

Abstract - Many computer programs are available for the analysis of radial distribution feeders. Because of the wide variation of the assumptions made in the development of the programs, there is a need for benchmark systems for comparison testing of the various programs. This paper presents the complete data for three four-wire wye and one three-wire delta radial distribution feeders.

Keywords: distribution system analysis, test systems, computer programs.

## INTRODUCTION

In recent years many digital computer programs have been developed for the analysis of unbalanced three-phase radial distribution feeders. The programs use a wide variety of iterative techniques and range from very simple with many simplifying assumptions made for line and load models to very sophisticated with little if any simplifying assumptions. With so many different programs available there is a need for benchmark test feeders so that the results of various programs can be compared.

This paper presents the complete data for three four-wire wye and one three-wire delta radial distribution feeders. No results will be given for any of the feeders. It is hoped that developers of distribution analysis programs will use these test systems to test their programs and to present results in future papers.

## BASIC DATA

The following data will be common for all three systems:

The systems described in this paper were approved by the IEEE Distribution Planning Working Group during the 1990 Power Engineering Society's Winter Meeting. The paper was written by W. H. Kersting, Professor of Electrical Engineering at New Mexico State University, Las Cruces, NM.

91 WM 270-9 PWRS A paper recommended and approved by the IEEE Power System Engineering Committee of the IEEE Power Engineering Society for presentation at the IEEE/PES 1991 Winter Meeting, New York, New York, February 3-7, 1991. Manuscript submitted March 5, 1990; made available for printing November 30, 1990.

### Load Models

Loads can be connected at a bus (spot load) or assumed to be uniformly distributed along a line section (distributed load). Loads can be three-phase (balanced and unbalanced) or single-phase. Three-phase loads can be connected in wye or delta while single phase loads can be connected line-to-neutral or line-to-line. All loads can be modeled as constant kW and kVAr, constant impedance (Z) or constant current (I).

Table 1 lists the numeric codes that will be used to describe the various loads.

**Table 1**
Load Model Codes

| Code No. | Connection | Model |
|---|---|---|
| 1 | Wye | Constant kW, kVAr |
| 2 | Wye | Constant I |
| 3 | Wye | Constant Z |
| 4 | Delta | Constant kW, kVAr |
| 5 | Delta | Constant I |
| 6 | Delta | Constant Z |

Single-phase loads connected line-to-line will be assigned code numbers 4,5 or 6.

All of the load data will be given in kW and kVAr per phase. For constant impedance and constant current loads, the kW and kVAr given are assumed at rated voltage (1.0 per unit). For wye connected loads, Phases 1, 2 and 3 will be connected a-n, b-n and c-n respectively and delta connected loads will be connected a-b, b-c and c-a respectively. Only non-zero bus loads will be given in the various feeder load tables. All other bus loads are assumed to be zero.

### Shunt Capacitor

Shunt capacitor banks may be three-phase wye or delta connected and single-phase connected line-neutral or line-line. The capacitors are modeled as constant susceptance and specified as nameplate rated kVAr.

### Overhead Spacing Models

The Spacing ID numbers and type for overhead lines are summarized in Table 2.

**Table 2**
Overhead Line Spacings

| Spacing ID | Type |
|---|---|
| 500 | Three-phase, 4 wire |
| 505 | Two-phase, 3 wire |
| 510 | Single-phase, 2 wire |

0885-8950/91/0700-0975$01.00 © 1991 IEEE

Authorized licensed use limited to: UNIVERSIDADE FEDERAL DE OURO PRETO. Downloaded on April 19,2026 at 00:17:52 UTC from IEEE Xplore. Restrictions apply.

Figure 1 shows the spacing distances between the phase conductors and the neutral conductor for the Spacing ID numbers used for the overhead lines.

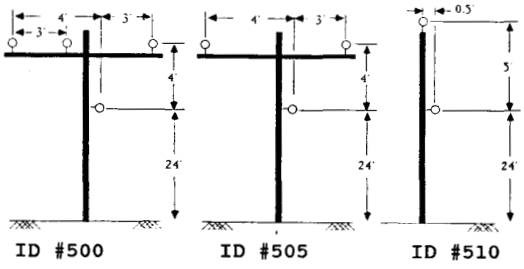


Figure 1 - Overhead Line Spacings

Conductor Data

Table 3 lists the characteristics of the various conductors that are used in the four test feeders.

**Table 3**

| Conductor | Type | Res. (ohm/mi.) | Dia. (in) | GMR (ft) | Amp |
|---|---|---|---|---|---|
| 1,000,000 | AA | 0.105 | 1.150 | 0.03680 | 698 |
| 556,500 | ACSR | 0.186 | 0.927 | 0.03110 | 730 |
| 500,000 | AA | 0.206 | 0.813 | 0.02600 | 483 |
| 336,400 | ACSR | 0.306 | 0.721 | 0.02440 | 530 |
| 4/0 | ACSR | 0.592 | 0.563 | 0.00814 | 340 |
| 2/0 | AA | 0.769 | 0.414 | 0.01250 | 230 |
| 1/0 | ACSR | 1.120 | 0.398 | 0.00446 | 230 |
| 1/0 | CU | 0.607 | 0.368 | 0.01113 | 310 |
| #2 | AA | 1.540 | 0.292 | 0.00883 | 156 |
| #2 | ACSR | 1.690 | 0.316 | 0.00418 | 180 |
| #4 | ACSR | 2.550 | 0.257 | 0.00452 | 140 |
| #10 | CU | 5.903 | 0.102 | 0.00331 | 80 |
| #12 | CU | 9.375 | 0.081 | 0.00262 | 75 |
| #14 | CU | 14.872 | 0.064 | 0.00208 | 20 |

Line Section Data

Each test feeder will have a table of "Line Section Data". The data will consist of the bus terminations of each line section (BUS A and BUS B), the length of the line section and a configuration code (CONFIG.CODE). The line data has been sorted on BUS A so there is no significance in the order in which the data appears or whether BUS A or BUS B is closer to the source. Each system will have a "Table of Configuration Codes" that will describe the configuration code. The configuration code is a unique number assigned to describe the spacing model (Table 2), the phasing (left to right) and the phase and neutral conductors.

Voltage Regulators

Voltage regulators are assumed to be "step-type" and can be connected in the substation or out on the feeder. The regulators can be three-phase or single-phase. Tap positions will be determined by the compensator circuit settings described by:

1. Voltage Level - desired voltage (on a 120 volt base ) to be held at the regulating point.

2. Bandwidth - the voltage level tolerance usually assumed to be 2 volts.

3. Compensator R and X Settings - the equivalent resistance and reactance to the regulating point calibrated in volts.

4. PT Ratio - turns ratio of the potential transformer feeding the compensator circuit.

5. CT Rating - the primary current rating of the current transformer feeding the compensator circuit.

IEEE 123 BUS RADIAL DISTRIBUTION FEEDER

The 123 bus test feeder is characterized by:

1. Load Types
   a. All spot loads
   b. Wye and delta connected
   c. Mixture of constant kW,kVAR, constant Z and constant I.

2. Line Types
   a. Three-phase overhead (all combinations of a,b,c)
   b. Two-phase overhead (combinations of a,b,c)
   c. Single-phase overhead (a-n, b-n and c-n)
   d. Three-phase underground

3. Voltage Regulators
   a. Three-phase, gang operated
   b. Three single-phase, wye connected
   c. Two single-phase, open wye connected
   d. Single-phase, line-to-neutral connected

4. Shunt Capacitors
   a. Three-phase
   b. Single-phase

5. Substation
   a. Three-phase short circuit MVA and angle at the high voltage terminals of the substation transformer.
   b. Substation transformer ratings and impedance.
   c. Substation transformer output voltages

6. Motor
   a. Step-down transformer
   b. Starting kVA and power factor given
   c. Running power factor

The circuit diagram (not to scale) for this feeder is shown in Figure 2.

Authorized licensed use limited to: UNIVERSIDADE FEDERAL DE OURO PRETO. Downloaded on April 19,2026 at 00:17:52 UTC from IEEE Xplore. Restrictions apply.

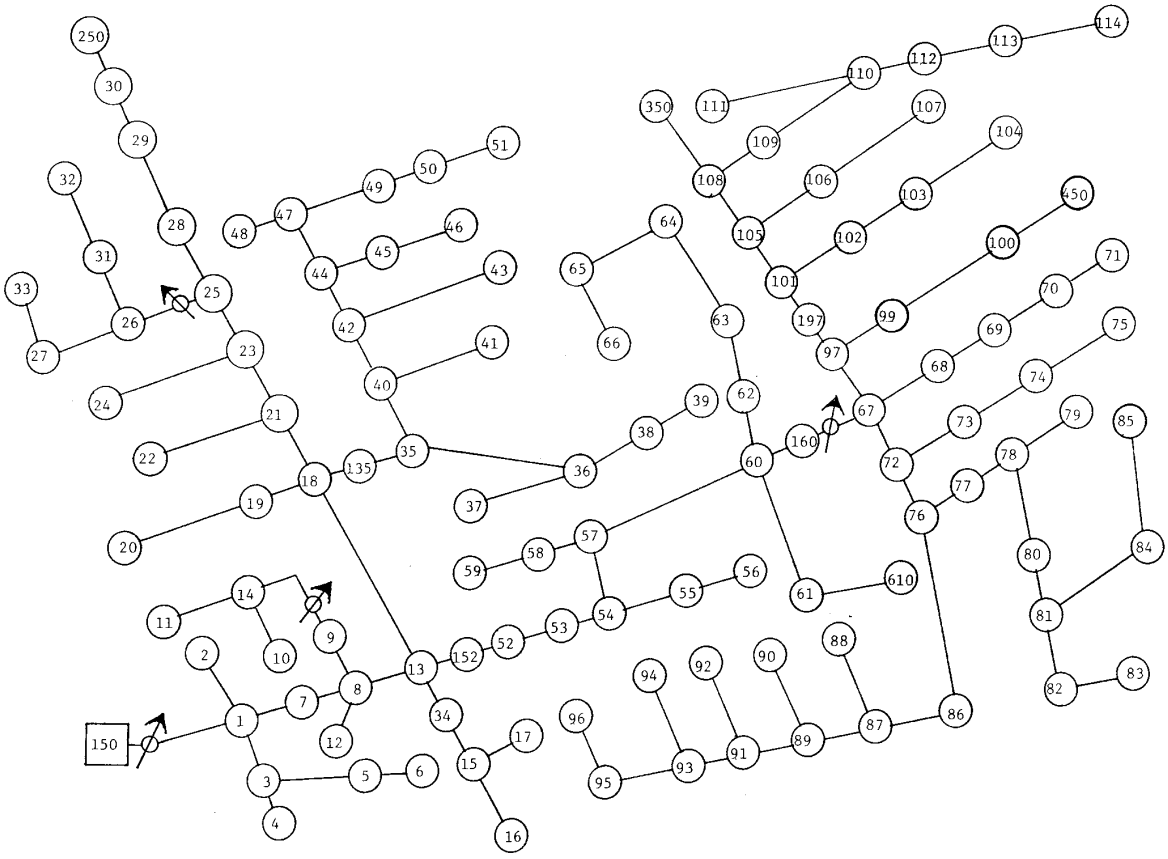


Figure 2 - 123 Bus Circuit Diagram

The substation transformer serving this feeder is rated:

5,000 kVA
115 delta-4.16 grounded wye kV
Z = 1.0 + j8.0 %

The three-phase short circuit MVA on the 115 kV bus of the substation is 1100 MVA at an angle of 82 degrees.

The output voltages from the transformer are balanced three-phase of 0.98 per unit.

A 150 horsepower induction motor is located at Bus 610. The starting kVA is assumed to be 6 times rated kVA at a 0.4 lagging power factor. The running power factor is 0.8 lag.

Table 4 gives the Line Section Data for this system.

**Table 4**

IEEE 123 BUS RADIAL DISTRIBUTION SYSTEM
LINE SECTION DATA

| BUS A | BUS B | LENGTH (FT.) | CONFIG. CODE |
|---|---|---|---|
| 1 | 2 | 175.0 | 10 |
| 1 | 3 | 250.0 | 11 |
| 1 | 7 | 300.0 | 1 |
| 3 | 4 | 200.0 | 11 |
| 3 | 5 | 325.0 | 11 |
| 5 | 6 | 250.0 | 11 |
| 7 | 8 | 200.0 | 1 |
| 8 | 12 | 225.0 | 10 |
| 8 | 9 | 225.0 | 9 |
| 8 | 13 | 300.0 | 1 |
| 9 | 14 | 425.0 | 9 |
| 13 | 34 | 150.0 | 11 |
| 13 | 18 | 825.0 | 2 |
| 13 | 152 | 0.0 | 506 |
| 14 | 11 | 250.0 | 9 |

Authorized licensed use limited to: UNIVERSIDADE FEDERAL DE OURO PRETO. Downloaded on April 19,2026 at 00:17:52 UTC from IEEE Xplore. Restrictions apply.

**Table 4**
(continued)

IEEE 123 BUS RADIAL DISTRIBUTION SYSTEM
LINE SECTION DATA

| BUS A | BUS B | LENGTH (FT.) | CONFIG. CODE |
|---|---|---|---|
| 14 | 10 | 250.0 | 9 |
| 15 | 16 | 375.0 | 11 |
| 15 | 17 | 350.0 | 11 |
| 18 | 19 | 250.0 | 9 |
| 18 | 21 | 300.0 | 2 |
| 18 | 135 | 0.0 | 506 |
| 19 | 20 | 325.0 | 9 |
| 21 | 22 | 525.0 | 10 |
| 21 | 23 | 250.0 | 2 |
| 23 | 24 | 550.0 | 11 |
| 23 | 25 | 275.0 | 2 |
| 25 | 26 | 350.0 | 7 |
| 25 | 28 | 200.0 | 2 |
| 26 | 27 | 275.0 | 7 |
| 26 | 31 | 225.0 | 11 |
| 27 | 33 | 500.0 | 9 |
| 28 | 29 | 300.0 | 2 |
| 29 | 30 | 350.0 | 2 |
| 30 | 250 | 200.0 | 2 |
| 31 | 32 | 300.0 | 11 |
| 34 | 15 | 100.0 | 11 |
| 35 | 36 | 650.0 | 8 |
| 35 | 40 | 250.0 | 1 |
| 36 | 37 | 300.0 | 9 |
| 36 | 38 | 250.0 | 10 |
| 38 | 39 | 325.0 | 10 |
| 40 | 41 | 325.0 | 11 |
| 40 | 42 | 250.0 | 1 |
| 42 | 43 | 500.0 | 10 |
| 42 | 44 | 200.0 | 1 |
| 44 | 45 | 200.0 | 9 |
| 44 | 47 | 250.0 | 1 |
| 45 | 46 | 300.0 | 9 |
| 47 | 48 | 150.0 | 4 |
| 47 | 49 | 250.0 | 4 |
| 49 | 50 | 250.0 | 4 |
| 50 | 51 | 250.0 | 4 |
| 52 | 53 | 200.0 | 1 |
| 53 | 54 | 125.0 | 1 |
| 54 | 55 | 275.0 | 1 |
| 54 | 57 | 350.0 | 3 |
| 55 | 56 | 250.0 | 1 |
| 57 | 58 | 250.0 | 10 |
| 57 | 60 | 750.0 | 3 |
| 58 | 59 | 250.0 | 10 |
| 60 | 61 | 550.0 | 5 |
| 60 | 62 | 250.0 | 12 |
| 60 | 160 | 0.0 | 506 |
| 61 | 610 | 0.0 | 3 |
| 62 | 63 | 175.0 | 12 |
| 63 | 64 | 350.0 | 12 |
| 64 | 65 | 425.0 | 12 |
| 65 | 66 | 325.0 | 12 |
| 67 | 68 | 200.0 | 9 |
| 67 | 72 | 275.0 | 3 |
| 67 | 97 | 250.0 | 3 |
| 68 | 69 | 275.0 | 9 |
| 69 | 70 | 325.0 | 9 |
| 70 | 71 | 275.0 | 9 |
| 72 | 73 | 275.0 | 11 |
| 72 | 76 | 200.0 | 3 |
| 73 | 74 | 350.0 | 11 |
| 74 | 75 | 400.0 | 11 |
| 76 | 77 | 400.0 | 6 |
| 76 | 86 | 700.0 | 3 |
| 77 | 78 | 100.0 | 6 |
| 78 | 79 | 225.0 | 6 |

**Table 4**
(continued)

IEEE 123 BUS RADIAL DISTRIBUTION SYSTEM
LINE SECTION DATA

| BUS A | BUS A | LENGTH (FT.) | CONFIG. CODE |
|---|---|---|---|
| 78 | 80 | 475.0 | 6 |
| 80 | 81 | 175.0 | 6 |
| 81 | 82 | 250.0 | 6 |
| 81 | 84 | 675.0 | 11 |
| 82 | 83 | 250.0 | 6 |
| 84 | 85 | 475.0 | 11 |
| 86 | 87 | 450.0 | 6 |
| 87 | 88 | 175.0 | 9 |
| 87 | 89 | 275.0 | 6 |
| 89 | 90 | 250.0 | 10 |
| 89 | 91 | 225.0 | 6 |
| 91 | 92 | 300.0 | 11 |
| 91 | 93 | 225.0 | 6 |
| 93 | 94 | 275.0 | 9 |
| 93 | 95 | 300.0 | 6 |
| 95 | 96 | 200.0 | 10 |
| 97 | 98 | 275.0 | 3 |
| 97 | 197 | 0.0 | 506 |
| 98 | 99 | 550.0 | 3 |
| 99 | 100 | 300.0 | 3 |
| 100 | 450 | 800.0 | 3 |
| 101 | 102 | 225.0 | 11 |
| 101 | 105 | 275.0 | 3 |
| 102 | 103 | 325.0 | 11 |
| 103 | 104 | 700.0 | 11 |
| 105 | 106 | 225.0 | 10 |
| 105 | 108 | 325.0 | 3 |
| 106 | 107 | 575.0 | 10 |
| 108 | 109 | 450.0 | 9 |
| 108 | 350 | 1000.0 | 3 |
| 109 | 110 | 300.0 | 9 |
| 110 | 111 | 575.0 | 9 |
| 110 | 112 | 125.0 | 9 |
| 112 | 113 | 525.0 | 9 |
| 113 | 114 | 325.0 | 9 |
| 135 | 35 | 375.0 | 4 |
| 150 | 1 | 400.0 | 1 |
| 152 | 52 | 400.0 | 1 |
| 160 | 67 | 350.0 | 6 |
| 197 | 101 | 250.0 | 3 |

Table 5 gives the Overhead Line Configuration Codes for this system.

**Table 5**

IEEE 123 BUS RADIAL DISTRIBUTION SYSTEM
OVERHEAD LINE CONFIGURATIONS

| CONF ID | PHASING | PHASE COND ACSR | NEUTRAL COND ACSR | SPACING ID |
|---|---|---|---|---|
| 1 | A B C N | 336,400 26/7 | 4/0 6/1 | 500 |
| 2 | C A B N | 336,400 26/7 | 4/0 6/1 | 500 |
| 3 | B C A N | 336,400 26/7 | 4/0 6/1 | 500 |
| 4 | C B A N | 336,400 26/7 | 4/0 6/1 | 500 |
| 5 | B A C N | 336,400 26/7 | 4/0 6/1 | 500 |
| 6 | A C B N | 336,400 26/7 | 4/0 6/1 | 500 |
| 7 | A C N | 336,400 26/7 | 4/0 6/1 | 505 |
| 8 | A B N | 336,400 26/7 | 4/0 6/1 | 505 |
| 9 | A N | 1/0 | 1/0 | 510 |
| 10 | B N | 1/0 | 1/0 | 510 |
| 11 | C N | 1/0 | 1/0 | 510 |

Authorized licensed use limited to: UNIVERSIDADE FEDERAL DE OURO PRETO. Downloaded on April 19,2026 at 00:17:52 UTC from IEEE Xplore. Restrictions apply.

Addition Configuration Codes are:

512 - Three-phase underground line consisting of three 1/0 copper concentric neutral cables. The cables are spaced 6 inches apart on a horizontal plane 40 inches below ground. The concentric neutral consists of 10-#14 copper conductors. The outside diameter of the cable (over the concentric neutral) is 0.97 inches.

506 - a three-phase zero impedance switch

3 - a three-phase transformer rated:
150 kVA
4160 wye - 480 delta volt
Z = 1.27 + j 2.72 %.

Table 6 gives the Shunt Capacitor Data for this system.

**Table 6**

IEEE 123 BUS RADIAL DISTRIBUTION FEEDER
SHUNT CAPACITORS

| BUS NO. | PHASE A KVAR | PHASE B KVAR | PHASE C KVAR |
|---|---|---|---|
| 83 | 200.00 | 200.00 | 200.00 |
| 88 | 50.00 | | |
| 90 | | 50.00 | |
| 92 | | | 50.00 |
| *** Total *** | 250.00 | 250.00 | 250.00 |

Table 7 gives the Bus Load Data for this system.

**Table 7**

IEEE 123 BUS RADIAL DISTRIBUTION SYSTEM
BUS LOADS AS KW AND KVAR

| BUS NO. | LOAD MDL. | PH-1 KW | PH-1 KVAR | PH-2 KW | PH-2 KVAR | PH-3 KW | PH-3 KVAR |
|---|---|---|---|---|---|---|---|
| 1 | 1 | 38.47 | 19.22 | 0.00 | 0.00 | 0.00 | 0.00 |
| 2 | 1 | 0.00 | 0.00 | 19.23 | 9.61 | 0.00 | 0.00 |
| 4 | 1 | 0.00 | 0.00 | 0.00 | 0.00 | 38.47 | 19.22 |
| 5 | 2 | 0.00 | 0.00 | 0.00 | 0.00 | 19.23 | 9.61 |
| 6 | 3 | 0.00 | 0.00 | 0.00 | 0.00 | 38.47 | 19.22 |
| 7 | 1 | 19.23 | 9.61 | 0.00 | 0.00 | 0.00 | 0.00 |
| 9 | 1 | 38.47 | 19.22 | 0.00 | 0.00 | 0.00 | 0.00 |
| 10 | 2 | 19.23 | 9.61 | 0.00 | 0.00 | 0.00 | 0.00 |
| 11 | 3 | 38.47 | 19.22 | 0.00 | 0.00 | 0.00 | 0.00 |
| 12 | 1 | 0.00 | 0.00 | 19.23 | 9.61 | 0.00 | 0.00 |
| 16 | 1 | 0.00 | 0.00 | 0.00 | 0.00 | 38.47 | 19.22 |
| 17 | 1 | 0.00 | 0.00 | 0.00 | 0.00 | 19.23 | 9.61 |
| 19 | 1 | 38.47 | 19.22 | 0.00 | 0.00 | 0.00 | 0.00 |
| 20 | 2 | 38.47 | 19.22 | 0.00 | 0.00 | 0.00 | 0.00 |
| 22 | 3 | 0.00 | 0.00 | 38.47 | 19.22 | 0.00 | 0.00 |
| 24 | 1 | 0.00 | 0.00 | 0.00 | 0.00 | 38.47 | 19.22 |
| 28 | 2 | 38.47 | 19.22 | 0.00 | 0.00 | 0.00 | 0.00 |
| 29 | 3 | 38.47 | 19.22 | 0.00 | 0.00 | 0.00 | 0.00 |
| 30 | 1 | 0.00 | 0.00 | 0.00 | 0.00 | 38.47 | 19.22 |
| 31 | 1 | 0.00 | 0.00 | 0.00 | 0.00 | 19.23 | 9.61 |
| 32 | 1 | 0.00 | 0.00 | 0.00 | 0.00 | 19.23 | 9.61 |
| 33 | 2 | 38.47 | 19.22 | 0.00 | 0.00 | 0.00 | 0.00 |
| 34 | 3 | 0.00 | 0.00 | 0.00 | 0.00 | 38.47 | 19.22 |
| 35 | 4 | 38.47 | 19.22 | 0.00 | 0.00 | 0.00 | 0.00 |
| 37 | 3 | 38.47 | 19.22 | 0.00 | 0.00 | 0.00 | 0.00 |
| 38 | 2 | 0.00 | 0.00 | 19.23 | 9.61 | 0.00 | 0.00 |

**Table 7**
(continued)

IEEE 123 BUS RADIAL DISTRIBUTION SYSTEM
BUS LOADS AS KW AND KVAR

| BUS NO. | LOAD MDL. | PH-1 KW | PH-1 KVAR | PH-2 KW | PH-2 KVAR | PH-3 KW | PH-3 KVAR |
|---|---|---|---|---|---|---|---|
| 39 | 1 | 0.00 | 0.00 | 19.23 | 9.61 | 0.00 | 0.00 |
| 41 | 1 | 0.00 | 0.00 | 0.00 | 0.00 | 19.23 | 9.61 |
| 42 | 1 | 19.23 | 9.61 | 0.00 | 0.00 | 0.00 | 0.00 |
| 43 | 3 | 0.00 | 0.00 | 38.47 | 19.22 | 0.00 | 0.00 |
| 45 | 2 | 19.23 | 9.61 | 0.00 | 0.00 | 0.00 | 0.00 |
| 46 | 1 | 19.23 | 9.61 | 0.00 | 0.00 | 0.00 | 0.00 |
| 47 | 2 | 34.19 | 26.46 | 34.19 | 26.46 | 34.19 | 26.46 |
| 48 | 3 | 68.38 | 52.91 | 68.38 | 52.91 | 68.38 | 52.91 |
| 49 | 1 | 34.19 | 26.46 | 68.38 | 52.91 | 34.19 | 26.46 |
| 50 | 1 | 0.00 | 0.00 | 0.00 | 0.00 | 38.47 | 19.22 |
| 51 | 1 | 19.23 | 9.61 | 0.00 | 0.00 | 0.00 | 0.00 |
| 52 | 1 | 38.47 | 19.22 | 0.00 | 0.00 | 0.00 | 0.00 |
| 53 | 1 | 38.47 | 19.22 | 0.00 | 0.00 | 0.00 | 0.00 |
| 55 | 3 | 19.23 | 9.61 | 0.00 | 0.00 | 0.00 | 0.00 |
| 56 | 1 | 0.00 | 0.00 | 19.23 | 9.61 | 0.00 | 0.00 |
| 58 | 2 | 0.00 | 0.00 | 19.23 | 9.61 | 0.00 | 0.00 |
| 59 | 1 | 0.00 | 0.00 | 19.23 | 9.61 | 0.00 | 0.00 |
| 60 | 1 | 19.23 | 9.61 | 0.00 | 0.00 | 0.00 | 0.00 |
| 62 | 3 | 0.00 | 0.00 | 0.00 | 0.00 | 38.47 | 19.22 |
| 63 | 1 | 38.47 | 19.22 | 0.00 | 0.00 | 0.00 | 0.00 |
| 64 | 2 | 0.00 | 0.00 | 76.93 | 38.44 | 0.00 | 0.00 |
| 65 | 6 | 34.19 | 26.46 | 34.19 | 26.46 | 68.38 | 52.91 |
| 66 | 1 | 0.00 | 0.00 | 0.00 | 0.00 | 76.93 | 38.44 |
| 68 | 1 | 19.23 | 9.61 | 0.00 | 0.00 | 0.00 | 0.00 |
| 69 | 1 | 38.47 | 19.22 | 0.00 | 0.00 | 0.00 | 0.00 |
| 70 | 1 | 19.23 | 9.61 | 0.00 | 0.00 | 0.00 | 0.00 |
| 71 | 1 | 38.47 | 19.22 | 0.00 | 0.00 | 0.00 | 0.00 |
| 73 | 1 | 0.00 | 0.00 | 0.00 | 0.00 | 38.47 | 19.22 |
| 74 | 3 | 0.00 | 0.00 | 0.00 | 0.00 | 38.47 | 19.22 |
| 75 | 1 | 0.00 | 0.00 | 0.00 | 0.00 | 38.47 | 19.22 |
| 76 | 5 | 102.57 | 79.37 | 68.38 | 52.91 | 68.38 | 52.91 |
| 77 | 1 | 0.00 | 0.00 | 38.47 | 19.22 | 0.00 | 0.00 |
| 79 | 3 | 38.47 | 19.22 | 0.00 | 0.00 | 0.00 | 0.00 |
| 80 | 1 | 0.00 | 0.00 | 38.47 | 19.22 | 0.00 | 0.00 |
| 82 | 1 | 38.47 | 19.22 | 0.00 | 0.00 | 0.00 | 0.00 |
| 83 | 1 | 0.00 | 0.00 | 0.00 | 0.00 | 19.23 | 9.61 |
| 84 | 1 | 0.00 | 0.00 | 0.00 | 0.00 | 19.23 | 9.61 |
| 85 | 1 | 0.00 | 0.00 | 0.00 | 0.00 | 38.47 | 19.22 |
| 86 | 1 | 0.00 | 0.00 | 19.23 | 9.61 | 0.00 | 0.00 |
| 87 | 1 | 0.00 | 0.00 | 38.47 | 19.22 | 0.00 | 0.00 |
| 88 | 1 | 38.47 | 19.22 | 0.00 | 0.00 | 0.00 | 0.00 |
| 90 | 2 | 0.00 | 0.00 | 38.47 | 19.22 | 0.00 | 0.00 |
| 92 | 1 | 0.00 | 0.00 | 0.00 | 0.00 | 38.47 | 19.22 |
| 94 | 1 | 38.47 | 19.22 | 0.00 | 0.00 | 0.00 | 0.00 |
| 95 | 1 | 0.00 | 0.00 | 19.23 | 9.61 | 0.00 | 0.00 |
| 96 | 1 | 0.00 | 0.00 | 19.23 | 9.61 | 0.00 | 0.00 |
| 98 | 1 | 38.47 | 19.22 | 0.00 | 0.00 | 0.00 | 0.00 |
| 99 | 1 | 0.00 | 0.00 | 38.47 | 19.22 | 0.00 | 0.00 |
| 100 | 3 | 0.00 | 0.00 | 0.00 | 0.00 | 38.47 | 19.22 |
| 102 | 1 | 0.00 | 0.00 | 0.00 | 0.00 | 19.23 | 9.61 |
| 103 | 1 | 0.00 | 0.00 | 0.00 | 0.00 | 38.47 | 19.22 |
| 104 | 1 | 0.00 | 0.00 | 0.00 | 0.00 | 38.47 | 19.22 |
| 106 | 1 | 0.00 | 0.00 | 38.47 | 19.22 | 0.00 | 0.00 |
| 107 | 1 | 0.00 | 0.00 | 38.47 | 19.22 | 0.00 | 0.00 |
| 109 | 1 | 38.47 | 19.22 | 0.00 | 0.00 | 0.00 | 0.00 |
| 111 | 1 | 19.23 | 9.61 | 0.00 | 0.00 | 0.00 | 0.00 |
| 112 | 2 | 19.23 | 9.61 | 0.00 | 0.00 | 0.00 | 0.00 |
| 113 | 3 | 38.47 | 19.22 | 0.00 | 0.00 | 0.00 | 0.00 |
| 114 | 1 | 19.23 | 9.61 | 0.00 | 0.00 | 0.00 | 0.00 |
| *Total** | | 1369.85 | 759.43 | 888.98 | 519.17 | 1119.8 | 634.49 |

Authorized licensed use limited to: UNIVERSIDADE FEDERAL DE OURO PRETO. Downloaded on April 19,2026 at 00:17:52 UTC from IEEE Xplore. Restrictions apply.

The voltage regulator data for the system is as follows:

Regulator Id: 1
Bus A: 150 Bus B: 1
Bandwidth Setting: 2.0 volts
Three-phase, wye connected, compensator monitoring Phase A

| | Phase A |
|---|---|
| PT Ratio | 20.0 |
| CT Rating | 700.0 |
| R-Setting | 3.0 |
| X-Setting | 7.5 |
| Voltage Level | 120.0 |

Regulator Id: 2
Bus A: 9 Bus B: 14
Bandwidth Setting: 1.0 volts
Single-phase connected to Phase A

| | Phase A |
|---|---|
| PT Ratio | 20.0 |
| CT Rating | 50.0 |
| R-Setting | 0.4 |
| X-Setting | 0.4 |
| Voltage Level | 120.0 |

Regulator Id: 3
Bus A: 25 Bus B: 26
Bandwidth Setting: 1.0 volts
Two single-phase connected A-N and C-N

| | Phase A | Phase C |
|---|---|---|
| PT Ratio | 20.0 | 20.0 |
| CT Rating | 50.0 | 50.0 |
| R-Setting | 0.4 | 0.6 |
| X-Setting | 0.4 | 0.4 |
| Voltage Level | 120.0 | 120.0 |

Regulator Id: 4
Bus A: 160 Bus B: 67
Bandwidth Setting: 2.0 volts
Three single-phase connected in wye

| | Phase A | Phase B | Phase C |
|---|---|---|---|
| PT Ratio | 20.0 | 20.0 | 20.0 |
| CT Rating | 300.0 | 300.0 | 300.0 |
| R-Setting | 0.6 | 1.4 | 0.2 |
| X-Setting | 1.3 | 2.6 | 1.4 |
| Voltage Level | 124.0 | 124.0 | 124.0 |

## IEEE 34 BUS RADIAL DISTRIBUTION FEEDER

The 34 bus test feeder is characterized by:

1. Load Types
   a. Spot and distributed loads
   b. All wye connected
   c. All constant kW,kVAr
2. Line Types
   a. Three-phase overhead
   b. Single-phase overhead (a-n, b-n and c-n)
3. Voltage Regulators - single-phase regulators wye connected
4. Shunt Capacitors - balanced three-phase
5. Substation
   a. Three-phase short circuit MVA and angle at the high voltage terminals of the substation transformer.
   b. Substation transformer ratings and impedance.
   c. Substation transformer output voltages
6. In-line autotransformer converting feeder voltage from 24.9 kV to 4.16 kV.

The circuit diagram (not to scale) for this feeder is shown in Figure 3.

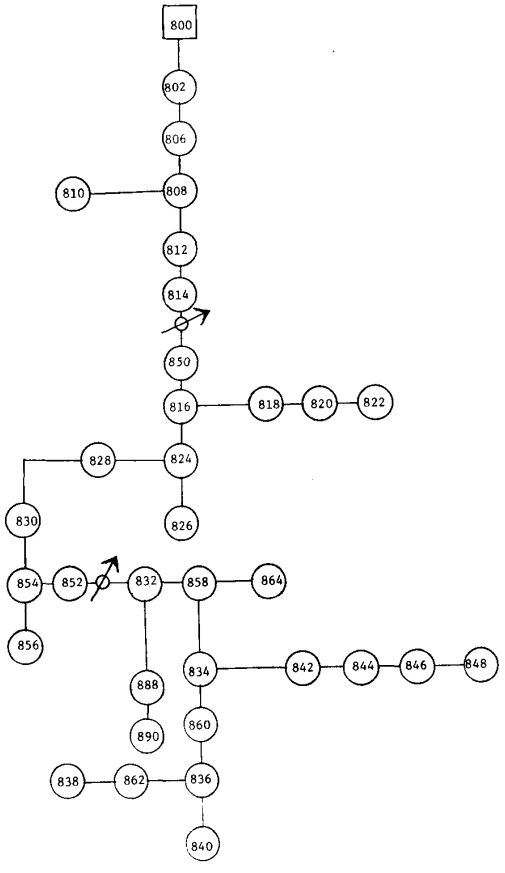


Figure 3 - 34 Bus Circuit Diagram

The substation transformer serving this feeder is rated:

2,500 kVA
345 delta-24.9 grounded wye kV
Z = 1.0 + j8.0 %

The three-phase short circuit MVA on the 345 kV bus of the substation is 1800 MVA at an angle of 85 degrees.

The output voltages from the transformer are balanced three-phase of 1.03 per unit.

Table 8 gives the Line Section Data for this system.

Authorized licensed use limited to: UNIVERSIDADE FEDERAL DE OURO PRETO. Downloaded on April 19,2026 at 00:17:52 UTC from IEEE Xplore. Restrictions apply.

**Table 8**

IEEE 34 BUS RADIAL DISTRIBUTION SYSTEM
LINE SECTION DATA

| BUS A | BUS B | LENGTH (FT.) | CONFIG. CODE |
|---|---|---|---|
| 800 | 802 | 2580.0 | 301 |
| 802 | 806 | 1730.0 | 301 |
| 806 | 808 | 32230.0 | 301 |
| 808 | 810 | 5840.0 | 303 |
| 808 | 812 | 37500.0 | 301 |
| 812 | 814 | 29730.0 | 301 |
| 814 | 850 | 10.0 | 301 |
| 816 | 818 | 1710.0 | 302 |
| 816 | 824 | 10210.0 | 301 |
| 818 | 820 | 48150.0 | 302 |
| 820 | 822 | 13740.0 | 302 |
| 824 | 826 | 3030.0 | 303 |
| 824 | 828 | 840.0 | 301 |
| 828 | 830 | 20440.0 | 301 |
| 830 | 854 | 520.0 | 301 |
| 832 | 858 | 4900.0 | 301 |
| 832 | 888 | 0.0 | 55 |
| 834 | 860 | 2020.0 | 301 |
| 834 | 842 | 280.0 | 301 |
| 836 | 840 | 860.0 | 301 |
| 836 | 862 | 280.0 | 301 |
| 842 | 844 | 1350.0 | 301 |
| 844 | 846 | 3640.0 | 301 |
| 846 | 848 | 530.0 | 301 |
| 850 | 816 | 310.0 | 301 |
| 852 | 832 | 10.0 | 301 |
| 854 | 856 | 23330.0 | 303 |
| 854 | 852 | 36830.0 | 301 |
| 858 | 864 | 1620.0 | 302 |
| 858 | 834 | 5830.0 | 301 |
| 860 | 836 | 2680.0 | 301 |
| 862 | 838 | 4860.0 | 304 |
| 888 | 890 | 10560.0 | 300 |

Table 9 gives the Overhead Line Configuration Codes for this system.

**Table 9**

IEEE 34 BUS RADIAL DISTRIBUTION SYSTEM
OVERHEAD LINE CONFIGURATIONS

| CONF ID | PHASING | PHASE COND ACSR | NEUTRAL COND ACSR | SPACING ID |
|---|---|---|---|---|
| 300 | B A C N | 1/0 | 1/0 | 500 |
| 301 | B A C N | #2 6/1 | #2 6/1 | 500 |
| 302 | A N | #4 6/1 | #4 6/1 | 510 |
| 303 | B N | #4 6/1 | #4 6/1 | 510 |
| 304 | A N | #2 6/1 | #2 6/1 | 510 |

Addition Configuration Codes are:

55 - In-line three-phase grounded wye - grounded wye connected autotransformer rated:

150 kVA
24.9 delta - 4.16 wye kV
Z = 1.90 + j4.08 per unit

Table 10 gives the Shunt Capacitor Data for this system.

**Table 10**

IEEE 34 BUS RADIAL DISTRIBUTION FEEDER
SHUNT CAPACITORS

| BUS NO. | PHASE A KVAR | PHASE B KVAR | PHASE C KVAR |
|---|---|---|---|
| 844 | 100.00 | 100.00 | 100.00 |
| 848 | 150.00 | 150.00 | 150.00 |
| *** Total ********** | | | |
| | 250.00 | 250.00 | 250.00 |

Table 11 gives the Bus Load Data for this system.

**Table 11**

IEEE 34 BUS RADIAL DISTRIBUTION SYSTEM
BUS LOADS AS KW AND KVAR

| BUS NO. | LOAD MDL. | PH-1 KW | PH-1 KVAR | PH-2 KW | PH-2 KVAR | PH-3 KW | PH-3 KVAR |
|---|---|---|---|---|---|---|---|
| 860 | 1 | 19.91 | 15.94 | 19.91 | 15.94 | 19.91 | 15.94 |
| 840 | 1 | 8.86 | 7.09 | 8.86 | 7.09 | 8.86 | 7.09 |
| 844 | 1 | 133.44 | 106.83 | 133.44 | 106.83 | 133.44 | 106.83 |
| 848 | 1 | 19.45 | 15.57 | 19.45 | 15.57 | 19.45 | 15.57 |
| 890 | 1 | 27.00 | 21.62 | 27.00 | 21.62 | 27.00 | 21.62 |
| ** Total ********** | | | | | | | |
| | | 208.66 | 167.05 | 208.66 | 167.05 | 208.66 | 167.05 |

Table 12 gives the Line Section Distributed Loads.

**Table 12**

IEEE 34 BUS RADIAL DISTRIBUTION FEEDER
LINE SECTION DISTRIBUTED LOADS

| BUS A | BUS B | LOAD MDL. | PH-1 KW | PH-1 KVAR | PH-2 KW | PH-2 KVAR | PH-3 KW | PH-3 KVAR |
|---|---|---|---|---|---|---|---|---|
| 802 | 806 | 1 | 0.00 | 0.00 | 31.22 | 16.14 | 26.07 | 13.48 |
| 808 | 810 | 1 | 0.00 | 0.00 | 15.88 | 8.21 | 0.00 | 0.00 |
| 818 | 820 | 1 | 33.90 | 17.52 | 0.00 | 0.00 | 0.00 | 0.00 |
| 820 | 822 | 1 | 135.53 | 70.07 | 0.00 | 0.00 | 0.00 | 0.00 |
| 816 | 824 | 1 | 0.00 | 0.00 | 0.39 | 0.20 | 0.00 | 0.00 |
| 824 | 826 | 1 | 0.00 | 0.00 | 41.93 | 21.68 | 0.00 | 0.00 |
| 824 | 828 | 1 | 0.00 | 0.00 | 0.00 | 0.00 | 2.78 | 1.44 |
| 828 | 830 | 1 | 6.18 | 3.20 | 0.00 | 0.00 | 0.00 | 0.00 |
| 854 | 856 | 1 | 0.00 | 0.00 | 3.71 | 1.92 | 0.00 | 0.00 |
| 832 | 858 | 1 | 6.68 | 3.45 | 1.08 | 0.56 | 5.35 | 2.77 |
| 858 | 864 | 1 | 0.63 | 0.33 | 0.00 | 0.00 | 0.00 | 0.00 |
| 858 | 834 | 1 | 3.99 | 2.06 | 12.55 | 6.49 | 12.82 | 6.63 |
| 834 | 860 | 1 | 15.66 | 8.09 | 20.86 | 10.78 | 111.15 | 57.46 |
| 860 | 836 | 1 | 27.37 | 14.15 | 10.55 | 5.45 | 42.05 | 21.74 |
| 836 | 840 | 1 | 17.49 | 9.04 | 21.81 | 11.27 | 0.00 | 0.00 |
| 862 | 838 | 1 | 27.61 | 14.27 | 0.00 | 0.00 | 0.00 | 0.00 |
| 842 | 844 | 1 | 9.12 | 4.71 | 0.00 | 0.00 | 0.00 | 0.00 |
| 844 | 846 | 1 | 0.00 | 0.00 | 24.59 | 12.71 | 22.23 | 11.49 |
| 846 | 848 | 1 | 0.00 | 0.00 | 22.62 | 11.70 | 0.00 | 0.00 |
| * Total ********** | | | | | | | | |
| | | | 284.16 | 146.9 | 207.19 | 107.1 | 222.45 | 115.0 |

The voltage regulator data for the feeder is as follows:

Authorized licensed use limited to: UNIVERSIDADE FEDERAL DE OURO PRETO. Downloaded on April 19,2026 at 00:17:52 UTC from IEEE Xplore. Restrictions apply.

Regulator Id: 1
Bus A: 814 Bus B: 850
Bandwidth Setting: 2.0 volts
Three single-phase connected in wye

| | Phase A | Phase B | Phase C |
|---|---|---|---|
| PT Ratio | 120.0 | 120.0 | 120.0 |
| CT Rating | 100.0 | 100.0 | 100.0 |
| R-Setting | 4.2 | 7.4 | 9.6 |
| X-Setting | 6.2 | 4.2 | 4.6 |
| Voltage Level | 124.0 | 124.0 | 124.0 |

Regulator Id: 2
Bus A: 852 Bus B: 832
Bandwidth Setting: 2.0 volts
Three single-phase connected in wye

| | Phase A | Phase B | Phase C |
|---|---|---|---|
| PT Ratio | 120.0 | 120.0 | 120.0 |
| CT Rating | 100.0 | 100.0 | 100.0 |
| R-Setting | 2.1 | 2.1 | 2.1 |
| X-Setting | 1.2 | 1.2 | 1.2 |
| Voltage Level | 124.0 | 124.0 | 124.0 |

**IEEE 13 BUS RADIAL DISTRIBUTION FEEDER**

The circuit diagram (not to scale) for this feeder is shown in Figure 4.

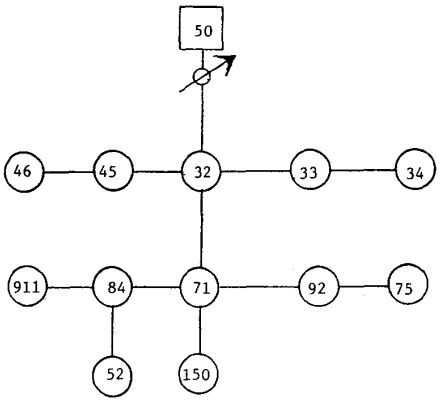


Figure 4 - 13 Bus Circuit Diagram

The 13 bus test feeder is characterized by:

1. Load Types
   a. Spot and distributed loads
   b. Wye and delta connected
   c. Mixture of constant kW,kVAR, constant Z and constant I.

2. Line Types
   a. Three-phase overhead & underground
   b. Single-phase overhead & underground

3. Voltage Regulators - single-phase regulators wye connected

4. Shunt Capacitors
   a. Balanced three-phase
   b. Single-phase

5. Substation
   a. Three-phase short circuit MVA and angle at the high voltage terminals of the substation transformer.
   b. Substation transformer ratings and impedance.
   c. Substation transformer output voltages

6. Motor
   a. Step-down transformer
   b. Starting kVA and power factor given
   c. Running power factor

The substation transformer serving this feeder is rated:

5,000 kVA
115 delta-4.16 grounded wye kV
Z = 1.0 + j8.0 %

The three-phase short circuit MVA on the 115 kV bus of the substation is 1100 MVA at an angle of 82 degrees.

The output voltages from the transformer are balanced three-phase of 1.00 per unit.

A 500 horsepower induction motor is located at Bus 34. The starting kVA is assumed to be 6 times rated kVA at a 0.4 lagging power factor. The running power factor is 0.8 lag.

Table 13 gives the Line Section Data for this system.

**Table 13**

IEEE 13 BUS RADIAL DISTRIBUTION SYSTEM
LINE SECTION DATA

| BUS A | BUS B | LENGTH (FT.) | CONFIG. CODE |
|---|---|---|---|
| 32 | 45 | 500.0 | 503 |
| 33 | 32 | 500.0 | 502 |
| 33 | 34 | 0.0 | 507 |
| 45 | 46 | 300.0 | 503 |
| 50 | 32 | 2000.0 | 501 |
| 52 | 84 | 800.0 | 509 |
| 71 | 32 | 2000.0 | 501 |
| 71 | 84 | 300.0 | 504 |
| 71 | 150 | 1000.0 | 501 |
| 75 | 92 | 500.0 | 508 |
| 84 | 911 | 300.0 | 505 |
| 92 | 71 | 0.0 | 506 |

Table 14 gives the Overhead Line Configuration Codes for this system.

**Table 14**

IEEE 13 BUS RADIAL DISTRIBUTION SYSTEM
OVERHEAD LINE CONFIGURATIONS

| CONF ID | PHASING | PHASE COND ACSR | NEUTRAL COND ACSR | SPACING ID |
|---|---|---|---|---|
| 501 | B A C N | 556,500 26/7 | 4/0 6/1 | 500 |
| 502 | C A B N | 4/0 6/1 | 4/0 6/1 | 500 |
| 503 | C B N | 1/0 | 1/0 | 505 |
| 504 | A C N | 1/0 | 1/0 | 505 |
| 505 | C N | 1/0 | 1/0 | 510 |

Authorized licensed use limited to: UNIVERSIDADE FEDERAL DE OURO PRETO. Downloaded on April 19,2026 at 00:17:52 UTC from IEEE Xplore. Restrictions apply.

Additional Configuration Codes are:

506 - Three-phase, zero impedance switch

507 - Step down three-phase transformer rated:

500 kVA
4160 delta - 480 wye volts
Z = 1.1 + j2.0%

508 - Three-phase underground line consisting of three 250,000 CM, AL concentric neutral cables. The cables are spaced 6 inches apart on a horizontal plane 40 inches below ground. The concentric neutral consists of 13-#14 copper conductors. The outside diameter of the cable (over the concentric neutral) is 1.28 inches.

509 - A single-phase 1/0 copper tape shielded conductor with a separate 1/0 copper bare neutral. The cable and bare neutral are buried 40 inches below ground with a 1.0 inch spacing between centers.

Table 15 gives the Shunt Capacitor Data for this system.

**Table 15**

IEEE 13 BUS RADIAL DISTRIBUTION FEEDER
SHUNT CAPACITORS

| BUS NO. | PHASE A KVAR | PHASE B KVAR | PHASE C KVAR |
|---|---|---|---|
| 75 | 200.00 | 200.00 | 200.00 |
| 911 | | | 100.00 |
| *** Total ********** | | | |
| | 200.00 | 200.00 | 300.00 |

Table 16 gives the Bus Load Data for this system.

**Table 16**

IEEE 13 BUS RADIAL DISTRIBUTION SYSTEM
BUS LOADS AS KW AND KVAR

| BUS NO. | LOAD MDL. | PH-1 KW | PH-1 KVAR | PH-2 KW | PH-2 KVAR | PH-3 KW | PH-3 KVAR |
|---|---|---|---|---|---|---|---|
| 34 | 1 | 42.63 | 20.18 | 0.00 | 0.00 | 0.00 | 0.00 |
| 45 | 1 | 0.00 | 0.00 | 170.53 | 125.09 | 0.00 | 0.00 |
| 46 | 6 | 0.00 | 0.00 | 230.22 | 131.97 | 0.00 | 0.00 |
| 52 | 3 | 127.90 | 85.79 | 0.00 | 0.00 | 0.00 | 0.00 |
| 71 | 4 | 383.70 | 219.95 | 383.70 | 219.95 | 383.70 | 219.95 |
| 75 | 1 | 486.02 | 189.07 | 68.21 | 60.55 | 289.91 | 212.65 |
| 92 | 5 | 0.00 | 0.00 | 0.00 | 0.00 | 170.53 | 151.38 |
| 911 | 2 | 0.00 | 0.00 | 0.00 | 0.00 | 170.53 | 80.74 |
| *Total ********** | | | | | | | |
| | | 1040.25 | 514.99 | 852.66 | 537.56 | 1014.67 | 664.72 |

Table 17 gives the Line Section Distributed Loads.

**Table 17**

IEEE 13 BUS RADIAL DISTRIBUTION SYSTEM
BUS LOADS AS KW AND KVAR

| BUS A | BUS B | LOAD MDL. | PH-1 KW | PH-1 KVAR | PH-2 KW | PH-2 KVAR | PH-3 KW | PH-3 KVAR |
|---|---|---|---|---|---|---|---|---|
| 32 | 71 | 1 | 16.48 | 9.45 | 66.40 | 38.06 | 116.97 | 67.05 |
| *TOTAL ********** | | | | | | | | |
| | | | 16.48 | 9.45 | 66.40 | 38.06 | 116.97 | 67.05 |

The voltage regulator data for the feeder is as follows:

Regulator Id: 1
Bus A: 50 Bus B: 32
Bandwidth Setting: 2.0 volts
Three single-phase connected in wye

| | Phase A | Phase B | Phase C |
|---|---|---|---|
| PT Ratio | 20.0 | 20.0 | 20.0 |
| CT Rating | 700.0 | 700.0 | 700.0 |
| R-Setting | 3.0 | 3.0 | 3.0 |
| X-Setting | 9.0 | 9.0 | 9.0 |
| Voltage Level | 122.0 | 122.0 | 122.0 |

**IEEE 37 BUS DELTA RADIAL DISTRIBUTION FEEDER**

The circuit diagram (not to scale) for this feeder is shown in Figure 5.

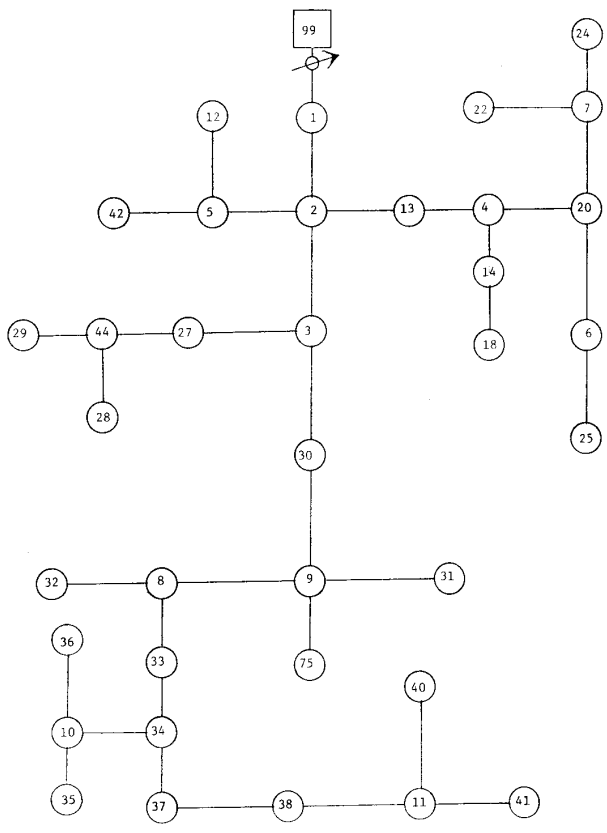


Figure 5 - 37 Bus Delta Circuit Diagram

Authorized licensed use limited to: UNIVERSIDADE FEDERAL DE OURO PRETO. Downloaded on April 19,2026 at 00:17:52 UTC from IEEE Xplore. Restrictions apply.

The 37 bus delta test feeder is characterized by:

1. Load Types
   a. Delta connected spot loads
   b. Mixture of constant kW,kVAR, constant Z and constant I.

2. Line Types - All three-phase delta underground

3. Voltage Regulators - single-phase regulators open-delta connected

4. No Shunt Capacitors

5. Substation
   a. Three-phase short circuit MVA and angle at the high voltage terminals of the substation transformer.
   b. Substation transformer ratings and impedance.
   c. Substation transformer output voltages

6. Motor
   a. Step-down transformer
   b. Starting kVA and power factor given
   c. Running power factor

The substation transformer serving this feeder is rated:

2,500 kVA
230 delta-4.8 delta kV
Z = 2.0 + j8.0 %

The three-phase short circuit MVA on the 230 kV bus of the substation is 1100 MVA at an angle of 82 degrees.

The output voltages from the transformer are balanced three-phase of 1.00 per unit.

A 500 horsepower induction motor is located at Bus 75. The starting kVA is assumed to be 6 times rated kVA at a 0.4 lagging power factor. The running power factor is 0.8 lag.

Table 18 gives the Line Section Data for this system.

**Table 18**

IEEE 37 BUS DELTA RADIAL DISTRIBUTION SYSTEM
LINE SECTION DATA

| BUS A | BUS B | LENGTH (FT.) | CONFIG. CODE |
|---|---|---|---|
| 1 | 2 | 960.0 | 322 |
| 2 | 5 | 400.0 | 325 |
| 2 | 13 | 360.0 | 323 |
| 2 | 3 | 1320.0 | 322 |
| 3 | 27 | 240.0 | 325 |
| 3 | 30 | 600.0 | 323 |
| 4 | 14 | 80.0 | 325 |
| 4 | 20 | 800.0 | 323 |
| 5 | 42 | 320.0 | 325 |
| 5 | 12 | 240.0 | 325 |
| 6 | 25 | 280.0 | 325 |
| 7 | 24 | 760.0 | 325 |
| 7 | 22 | 120.0 | 325 |
| 8 | 33 | 320.0 | 323 |

**Table 18**
(continued)

IEEE 37 BUS DELTA RADIAL DISTRIBUTION SYSTEM
LINE SECTION DATA

| BUS A | BUS B | LENGTH (FT.) | CONFIG. CODE |
|---|---|---|---|
| 8 | 32 | 320.0 | 325 |
| 9 | 31 | 600.0 | 323 |
| 9 | 8 | 320.0 | 323 |
| 10 | 35 | 200.0 | 325 |
| 10 | 36 | 1280.0 | 325 |
| 11 | 41 | 400.0 | 323 |
| 11 | 40 | 200.0 | 325 |
| 13 | 4 | 520.0 | 323 |
| 14 | 18 | 520.0 | 325 |
| 20 | 7 | 920.0 | 325 |
| 20 | 6 | 600.0 | 323 |
| 27 | 44 | 280.0 | 325 |
| 30 | 9 | 200.0 | 323 |
| 33 | 34 | 560.0 | 323 |
| 34 | 37 | 640.0 | 323 |
| 34 | 10 | 520.0 | 325 |
| 37 | 38 | 400.0 | 323 |
| 38 | 11 | 400.0 | 323 |
| 44 | 28 | 200.0 | 325 |
| 44 | 29 | 280.0 | 325 |
| 75 | 9 | 1.0 | 10 |
| 99 | 1 | 1850.0 | 321 |

Table 19 gives the Underground Line Configuration Codes for this system.

**Table 19**

IEEE 37 BUS DELTA RADIAL DISTRIBUTION SYSTEM
UNDERGROUND LINE CONFIGURATIONS

| CONF ID | PHASING | PHASE COND AA | CONCENTRIC NEUTRAL COPPER | SPACING ID # |
|---|---|---|---|---|
| 321 | A B C | 1000 KCM | 20 - #10 | 321 |
| 322 | A B C | 500 KCM | 16 - #12 | 322 |
| 323 | A B C | 2/0 | 7 - #14 | 323 |
| 325 | A B C | #2 | 10 - #14 | 325 |

Table 20 gives the phase spacings for the underground configurations.

**Table 20**

IEEE 37 BUS DELTA RADIAL DISTRIBUTION SYSTEM
UNDERGROUND LINE SPACING

| SPACING ID | A-B (Inch) | B-C (Inch) | C-A (Inch) |
|---|---|---|---|
| 321 | 2.074 | 2.074 | 2.060 |
| 322 | 1.603 | 1.603 | 1.570 |
| 323 | 1.146 | 1.146 | 1.120 |
| 325 | 1.030 | 1.030 | 0.970 |

Additional Configuration Codes are:

10 - Three-phase transformer rated:

500 kVA
4,800 delta - 480 delta volts
Z = 0.85 + j1.81 %

Authorized licensed use limited to: UNIVERSIDADE FEDERAL DE OURO PRETO. Downloaded on April 19,2026 at 00:17:52 UTC from IEEE Xplore. Restrictions apply.

Table 21 gives the Bus Load Data for this system.

**Table 21**

IEEE 37 BUS DELTA RADIAL DISTRIBUTION SYSTEM
BUS LOADS AS KW AND KVAR

| BUS NO. | LOAD MDL. | PH-1 KW | PH-1 KVAR | PH-2 KW | PH-2 KVAR | PH-3 KW | PH-3 KVAR |
|---|---|---|---|---|---|---|---|
| 1 | 4 | 140.47 | 69.74 | 140.47 | 69.74 | 350.75 | 174.15 |
| 12 | 4 | 0.00 | 0.00 | 0.00 | 0.00 | 84.11 | 41.76 |
| 13 | 4 | 0.00 | 0.00 | 0.00 | 0.00 | 84.11 | 41.76 |
| 14 | 5 | 16.82 | 8.35 | 21.03 | 10.44 | 0.00 | 0.00 |
| 18 | 6 | 84.11 | 41.76 | 0.00 | 0.00 | 0.00 | 0.00 |
| 20 | 4 | 0.00 | 0.00 | 0.00 | 0.00 | 84.11 | 41.76 |
| 22 | 5 | 0.00 | 0.00 | 140.47 | 69.74 | 21.03 | 10.44 |
| 24 | 6 | 0.00 | 0.00 | 42.06 | 20.88 | 0.00 | 0.00 |
| 25 | 4 | 0.00 | 0.00 | 42.06 | 20.88 | 0.00 | 0.00 |
| 27 | 4 | 0.00 | 0.00 | 0.00 | 0.00 | 42.06 | 20.88 |
| 28 | 4 | 42.06 | 20.88 | 42.06 | 20.88 | 42.06 | 20.88 |
| 29 | 5 | 42.06 | 20.88 | 0.00 | 0.00 | 0.00 | 0.00 |
| 30 | 6 | 0.00 | 0.00 | 0.00 | 0.00 | 84.11 | 41.76 |
| 31 | 6 | 0.00 | 0.00 | 84.11 | 41.76 | 0.00 | 0.00 |
| 32 | 4 | 0.00 | 0.00 | 0.00 | 0.00 | 42.06 | 20.88 |
| 33 | 5 | 84.11 | 41.76 | 0.00 | 0.00 | 0.00 | 0.00 |
| 34 | 4 | 0.00 | 0.00 | 0.00 | 0.00 | 42.06 | 20.88 |
| 35 | 4 | 0.00 | 0.00 | 0.00 | 0.00 | 84.11 | 41.76 |
| 36 | 6 | 0.00 | 0.00 | 42.06 | 20.88 | 0.00 | 0.00 |
| 37 | 5 | 140.47 | 69.74 | 0.00 | 0.00 | 0.00 | 0.00 |
| 38 | 4 | 126.17 | 62.64 | 0.00 | 0.00 | 0.00 | 0.00 |
| 40 | 4 | 0.00 | 0.00 | 0.00 | 0.00 | 84.11 | 41.76 |
| 41 | 5 | 0.00 | 0.00 | 0.00 | 0.00 | 42.06 | 20.88 |
| 42 | 6 | 8.41 | 4.18 | 84.11 | 41.76 | 0.00 | 0.00 |
| 44 | 4 | 42.06 | 20.88 | 0.00 | 0.00 | 0.00 | 0.00 |
| *Total | ********** | | | | | | |
| | | 726.74 | 360.81 | 638.43 | 316.96 | 1086.74 | 539.55 |

The voltage regulator data for the feeder is as follows:

Regulator Id: 1
Bus A: 99 Bus B: 1
Bandwidth Setting: 2.0 volts
Two single-phase connected in open-delta compensator controlled

| | Phase A | Phase C |
|---|---|---|
| PT Ratio | 40.0 | 40.0 |
| CT Rating | 350.0 | 350.0 |
| R-Setting | 0.2 | 1.0 |
| X-Setting | 0.9 | 0.4 |
| Voltage Level | 122.0 | 122.0 |

## CONCLUSIONS

The complete data for four radial distribution feeders has been presented. Developers of radial distribution analysis programs are encouraged to use these feeders to test their programs and to compare the results with the results from other programs.

W. H. Kersting (SM'64-Fellow'89) was born in Santa Fe, New Mexico. He received the BSEE degree from New Mexico State University and the MSEE degree from Illinois Institute of Technology.

He joined the faculty at New Mexico State University in 1962 and is currently Professor of Electrical Engineering and Director of the Electric Utility Management Program at New Mexico State University. Prior to joining NMSU, he was employed as a distribution engineer by El Paso Electric Company.

Prof. Kersting is a member of Eta Kappa Nu and Tau Beta Pi. He has been an active member of the IEEE Power Engineering Society's Power Engineering Education Committee serving as Chairman of the committee and several subcommittees.

Authorized licensed use limited to: UNIVERSIDADE FEDERAL DE OURO PRETO. Downloaded on April 19,2026 at 00:17:52 UTC from IEEE Xplore. Restrictions apply.