Assembly Instruction

Advice:
1. Power tools are suggested to be used during installation.
2. More than one person may be required to assemble this product.
3. The best advice is not tightening up any screws until the whole piece is assembled. If having difficulty aligning holes, loosen the screws already installed and readjust the armrest.
4. To avoid mess-up or mismatch, please use the hardware of each box to install the furniture in the same box.

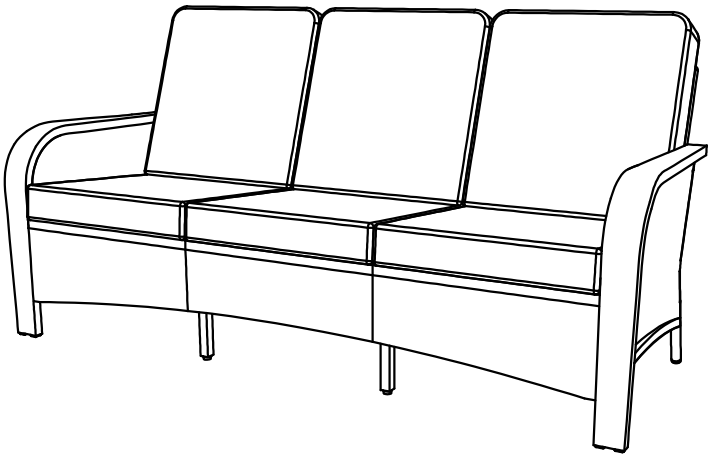

3-Seat Sofa

Assembly Video

Parts List

NO.	Picture	Description	QTY
S-A	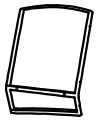	Right Sofa Back	1
S-B		Center Sofa Back	1
S-C	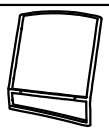	Left Sofa Back	1
S-D		Right Sofa Seat	1
S-E		Center Sofa Seat	1
S-F		Left Sofa Seat	1
S-G		Right Front Panel	1
S-H		Center Front Panel	1
S-I		Left Front Panel	1
S-J		Right Arm	1
S-K		Left Arm	1
S-L	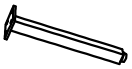	Short Center Sofa Legs	2
S-M	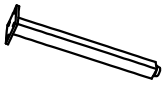	Long Center Sofa Legs	2
S-N	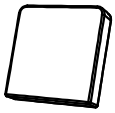	Back Cushion	3
S-O		Seat Cushion	3

Parts List

NO.	Picture	Description	QTY
Z1		Screw (M6*15)	16
V		Screw (M6*35)	16
T		Screw (M6*45)	4
S		Screw (M6*60)	14

NO.	Picture	Description	QTY
N		Washer (M6)	64
M		Nut (M6)	14
L		Allen Key	1
J		Wrench (M6)	1

The best advice is not tightening up any screws until the whole piece is assembled.

STEP 1

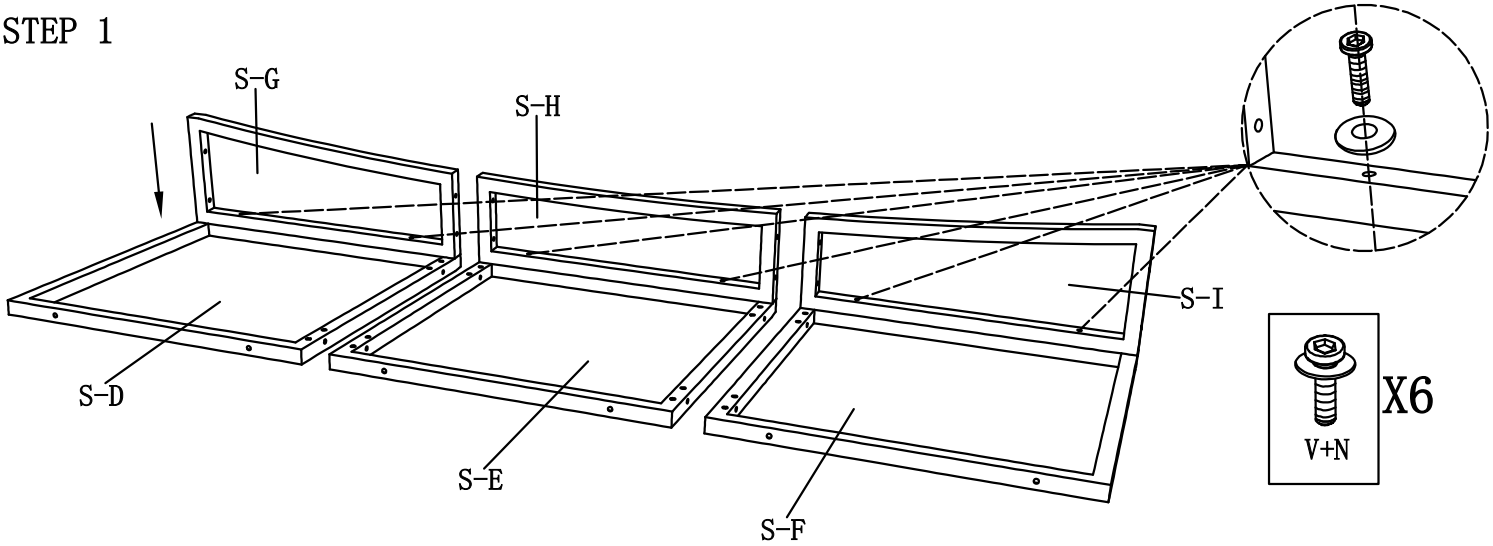

STEP 2

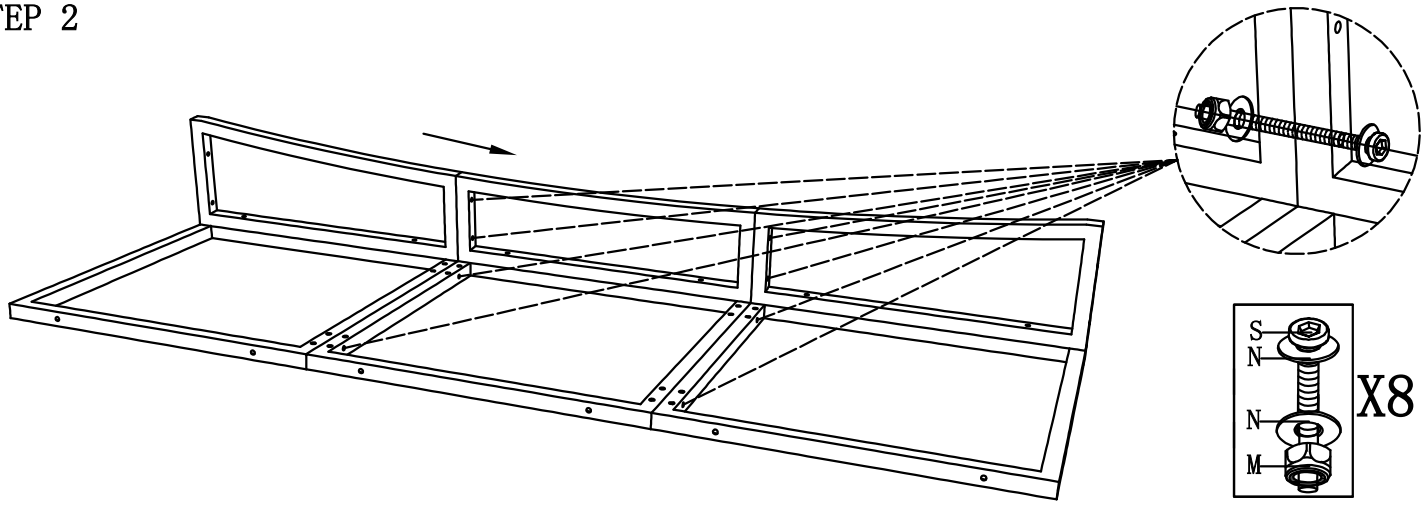

STEP 3

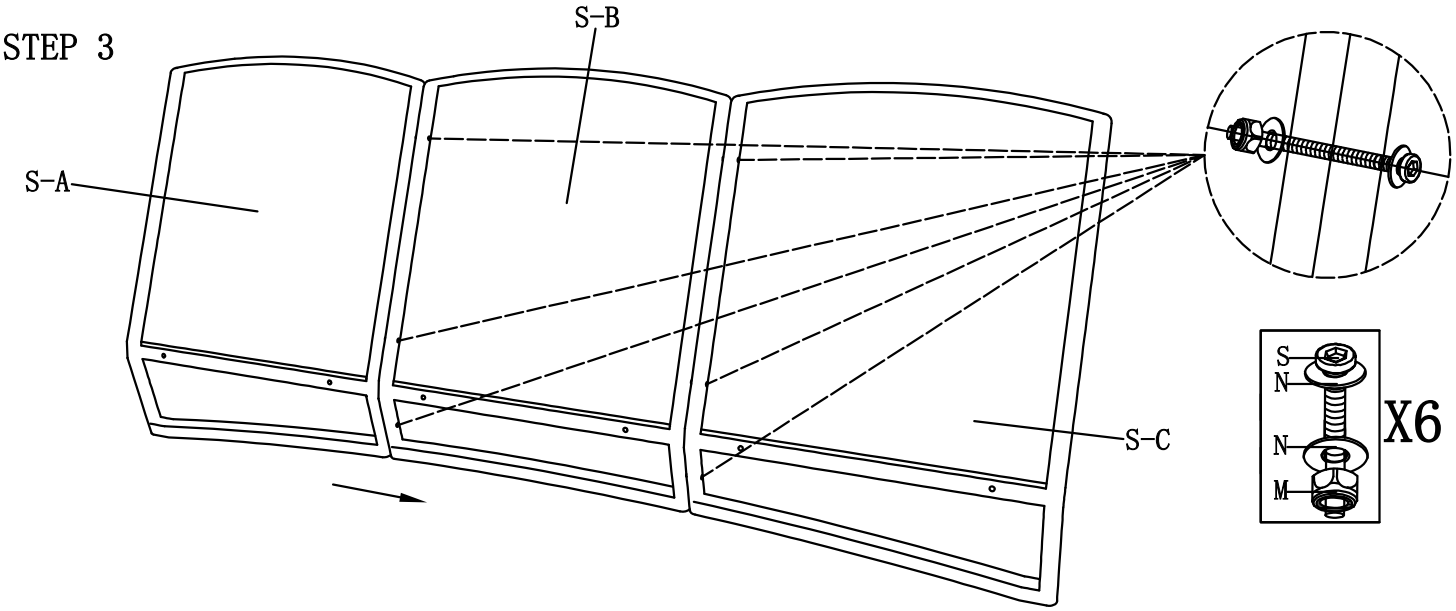

The best advice is not tightening up any screws until the whole piece is assembled.

STEP 4

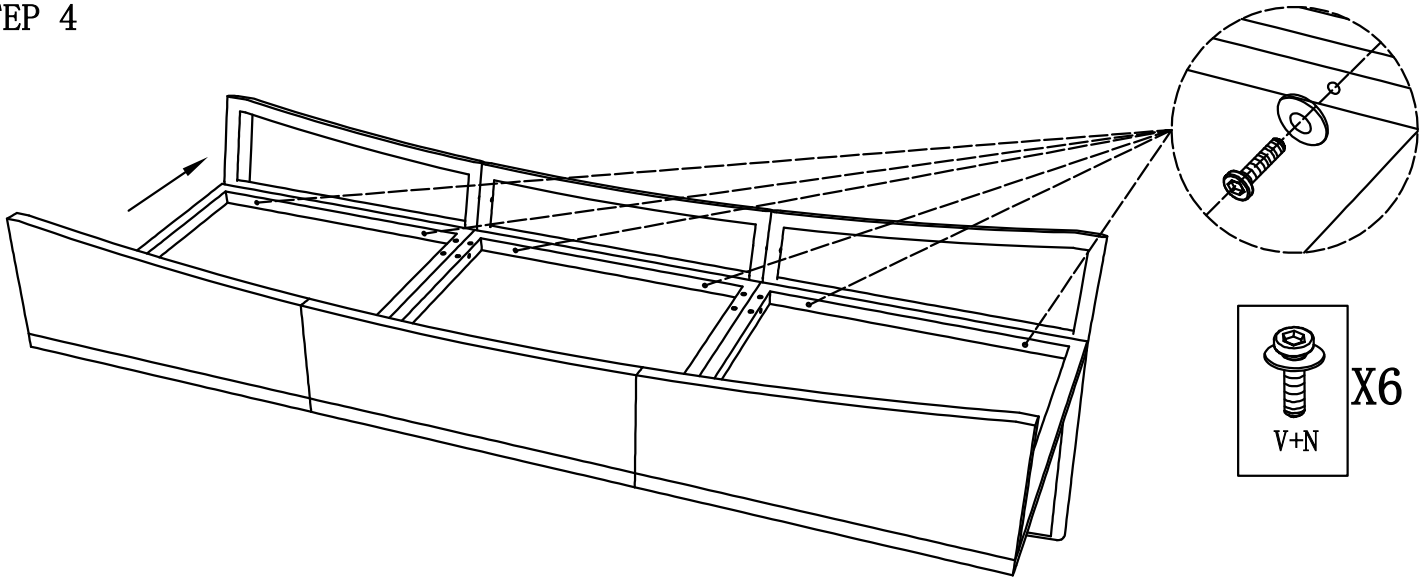

STEP 5

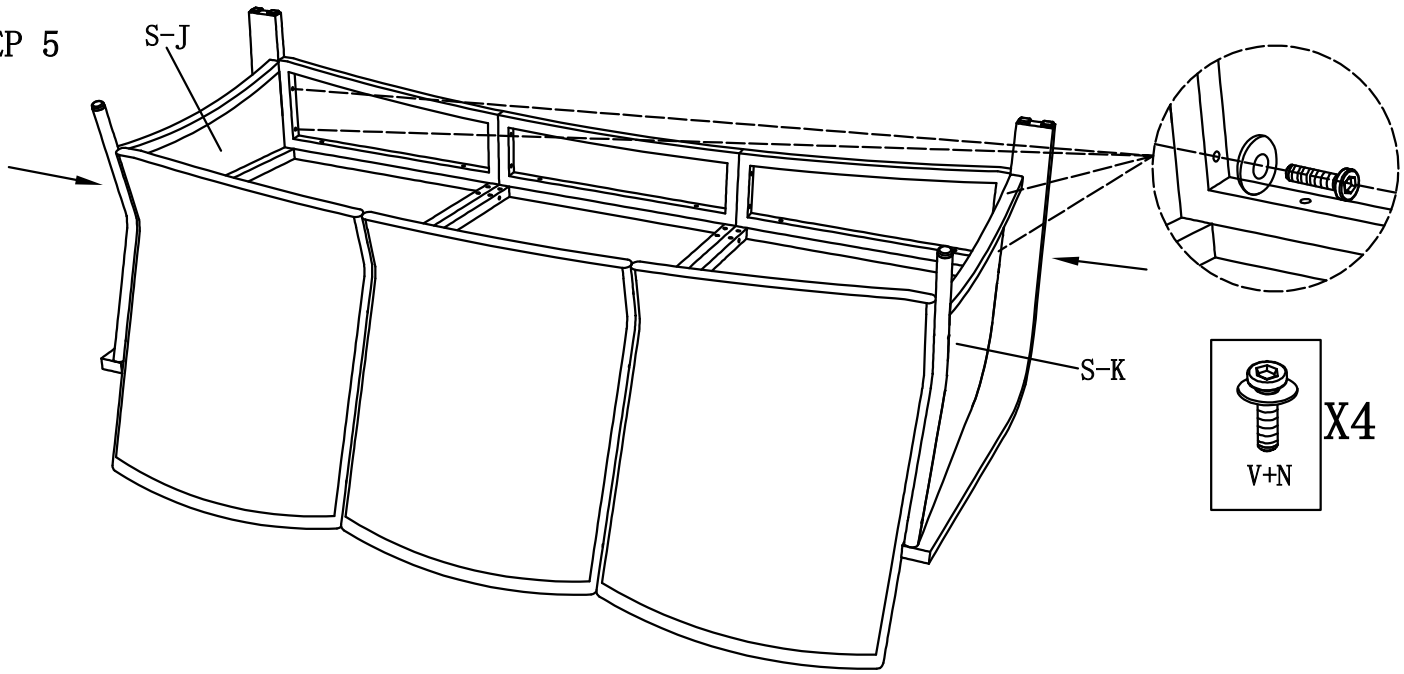

STEP 6

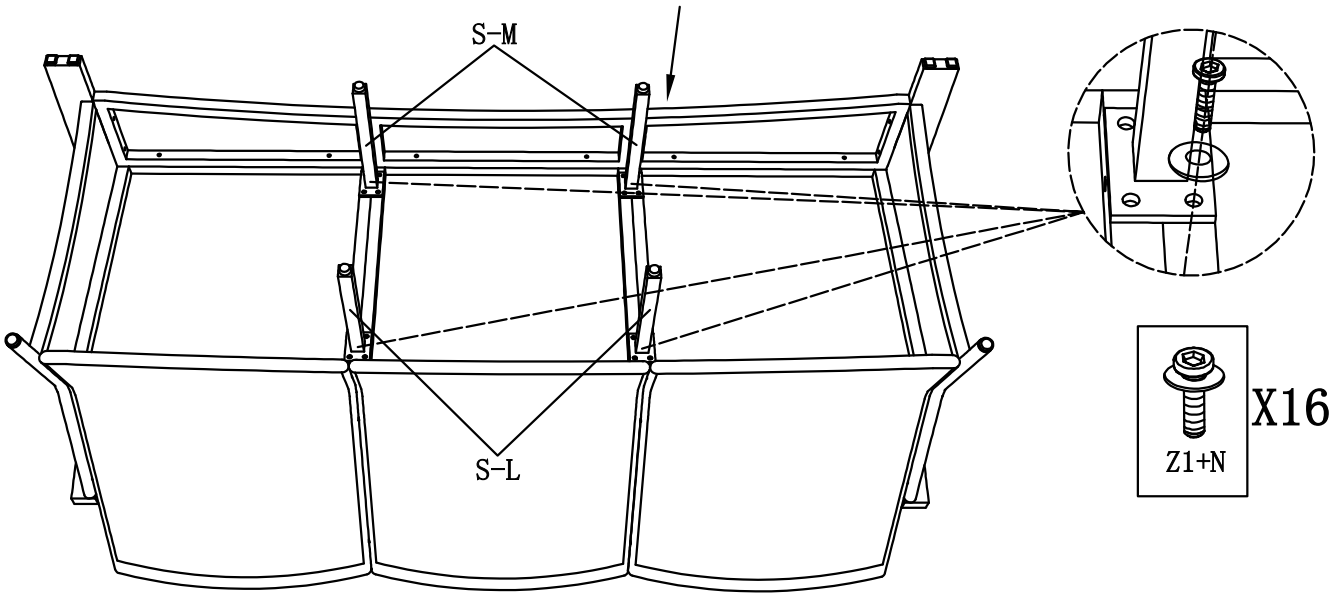

The best advice is not tightening up any screws until the whole piece is assembled.

STEP 7

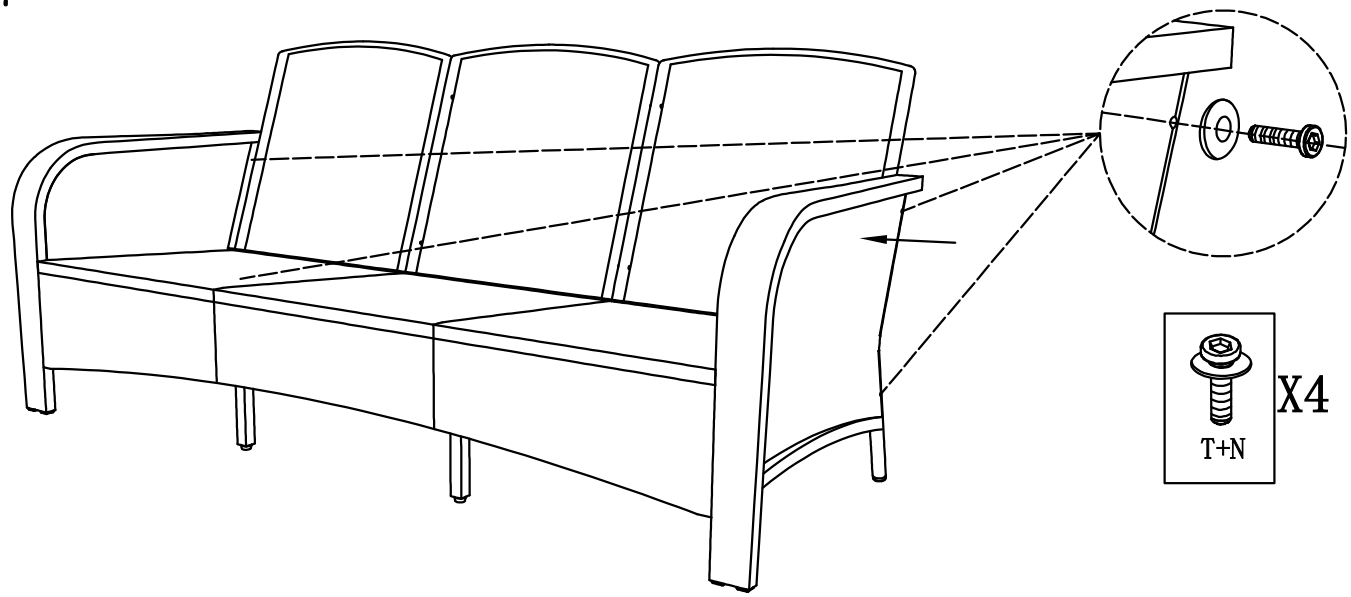

FINISH

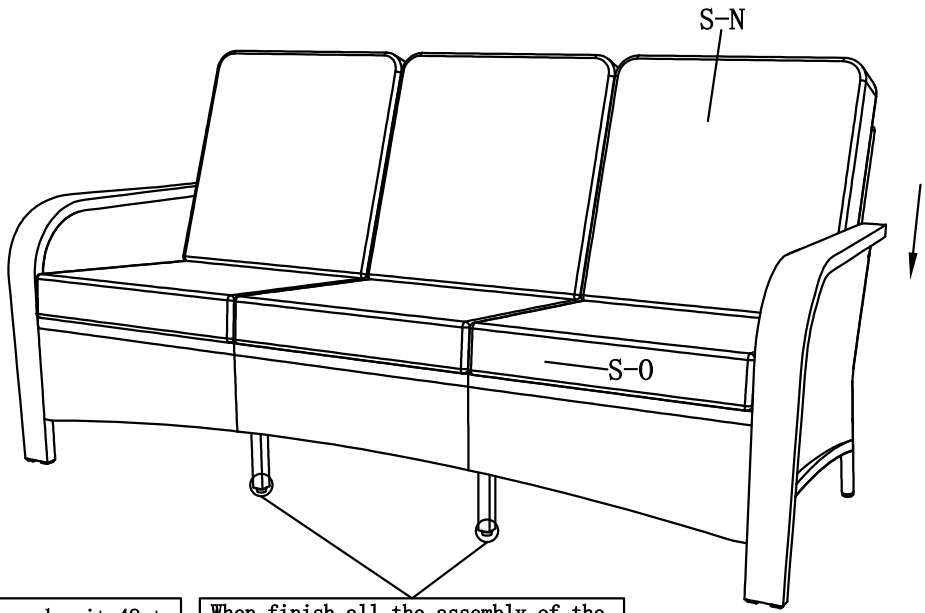

Please tap the cushions and wait 48 to 72 hours to fully rebound

When finish all the assembly of the sofa, adjust the middle legs and make the sofa parallel to the ground.