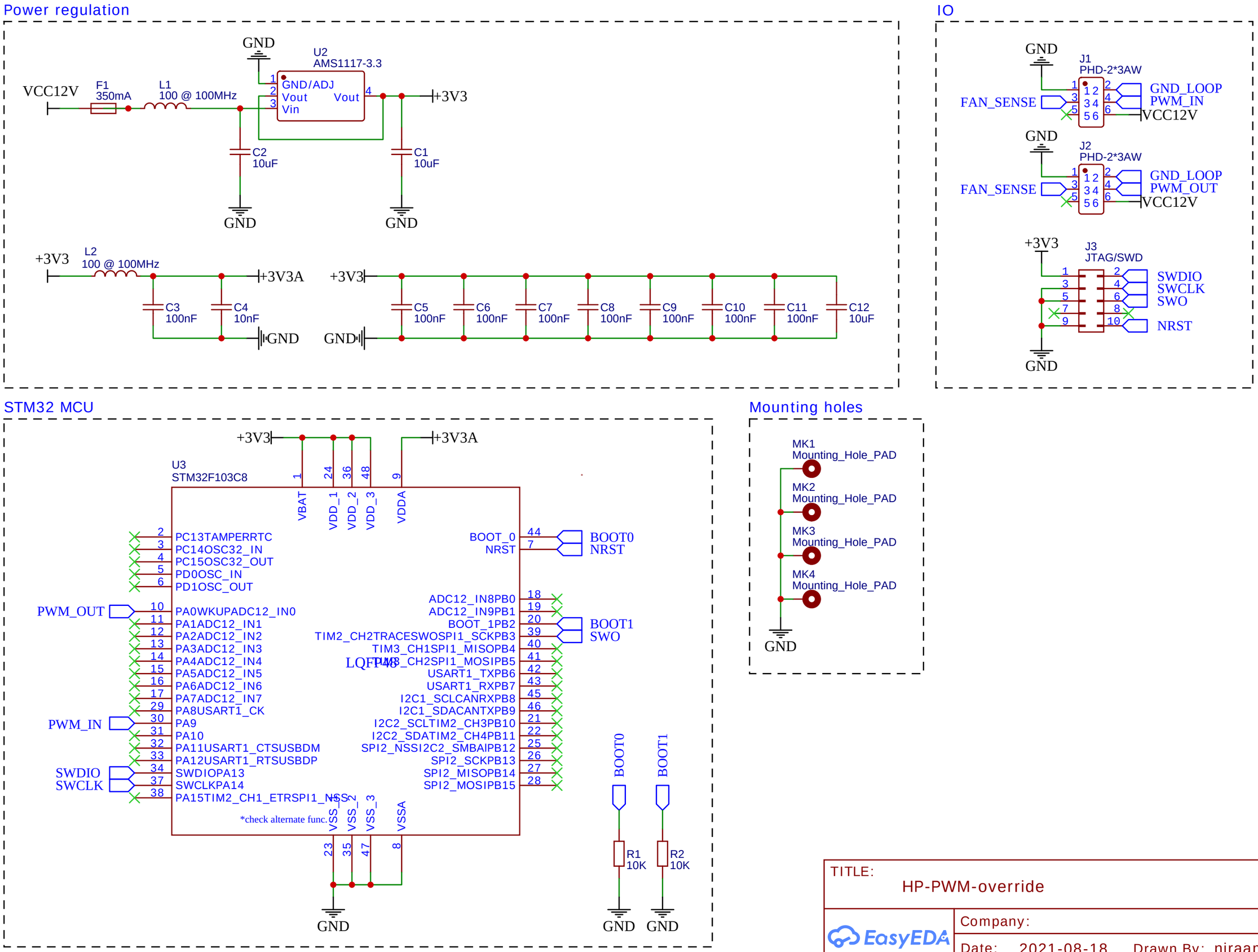

TITLE: HP-PWM-override	REV: 1.0
EasyEDA Company:	Sheet: 1/1
Date: 2021-08-18 Drawn By: niraami	