EC6020 – Mini Project Proposal

STANDALONE ULTRASONIC-BASED DAM OVERFLOW DETECTION AND WARNING SYSTEM FOR BRIDGE AND ROAD SAFETY

GroupMembers:

2022/E/018
2022/E/101
2022/E/129
2022/E/172
2022/E/174

TITLE

Standalone Ultrasonic-Based Dam Overflow Detection and Warning System for Bridge and Road Safety

1. INTRODUCTION

Flooding and sudden water overflow near dams and bridges pose a serious threat to road users, pedestrians, and nearby infrastructure. During heavy rainfall, water levels can rise rapidly, often without sufficient warning mechanisms in place. Traditional monitoring systems are expensive and require centralized infrastructure, making them unsuitable for rural or remote locations.

This project proposes a low-cost, standalone embedded system that continuously monitors water levels using an ultrasonic sensor and provides visual and audible warnings when dangerous levels are reached. The system is based on a standalone ATmega328P microcontroller**,** ensuring reliability, simplicity, and ease of deployment.

2. PROJECT OBJECTIVES

- To continuously monitor water level near dams and bridges
- To detect overflow or near-overflow conditions automatically
- To alert users using LEDs, LCD display, and buzzer
- To design a standalone AVR-based system without using Arduino boards
- To simulate and validate the design using Proteus

3. SYSTEM DESIGN OVERVIEW

3.1 System Architecture

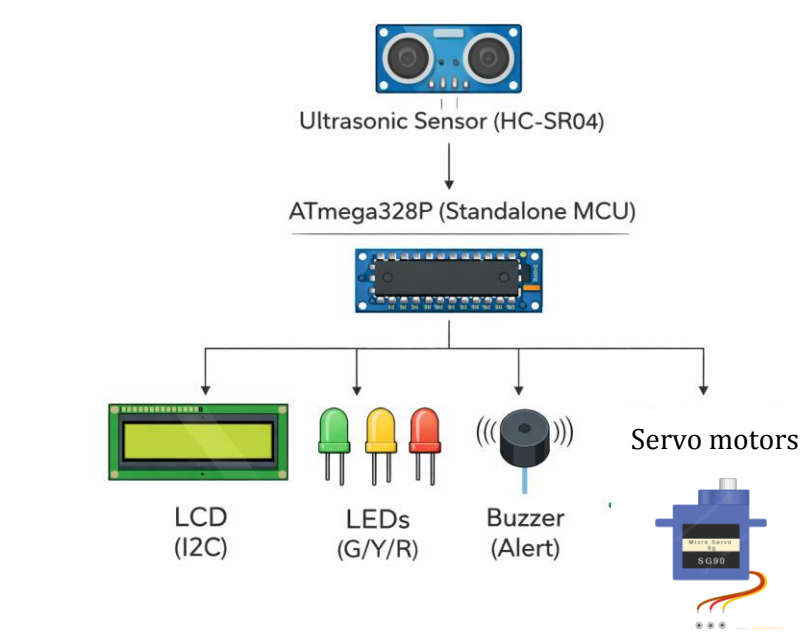

The system continuously reads distance values from the ultrasonic sensor, processes them using the microcontroller, and triggers appropriate outputs based on predefined thresholds.

4. CIRCUIT DESIGN

4.1 Microcontroller Core

- ATmega328P (Standalone)
- External 16 MHz crystal oscillator
- Reset pull-up resistor (10 kΩ)
- Decoupling capacitors for stable operation

Power connections:

- VCC and AVCC connected to +5 V
- GND pins connected to ground
- AREF connected to ground via capacitor

4.2 Ultrasonic Sensor Interface

The HC-SR04 ultrasonic sensor is used to measure the distance between the sensor and the water surface.

HC-SR04 Pin	ATmega328P Pin
TRIG	PD2
ECHO	PD3
VCC	+5 V
GND	GND

Distance is calculated from the echo pulse duration.

4.3 LCD Display Interface

- LCD operated in I2C mode: Simplifies communication between the microcontroller and the LCD by reducing the number of wires needed.
- Reduces wiring complexity: The I2C mode minimizes the number of connections, making the system more compact and easier to assemble.
- Displays:

    - ❖ Water level (distance): Shows the current water level measurement, typically sourced from the ultrasonic sensor.
    - ❖ Status (SAFE / WARNING / DANGER): Provides real-time status updates of the system's condition based on the water level

Connection

LCD I2C	ATmega328P
SDA	PC4
SCL	PC5
VCC	+5 V
GND	GND

4.4 Warning Indicators

LED Indicators

- **Green LED** – Safe water level
- **Yellow LED** – Warning level
- **Red LED** – Danger / Overflow

Connected through current-limiting resistors to PORTB pins.

Buzzer

- Activated during overflow condition
- Provides audible alert for drivers and pedestrians

. 4.5 Servo Motors

Both servos are programmed to move to predefined angular positions depending on the detected water level:

- **Safe level** – Gate fully closed
- **Warning level** – Gate partially open (optional)
- **Danger level** – Gate fully open

  - **OC1A (PB1)** – Controls Servo Motor 1 (Left Gate Arm)

  - **OC1B (PB2)** – Controls Servo Motor 2 (Right Gate Arm)

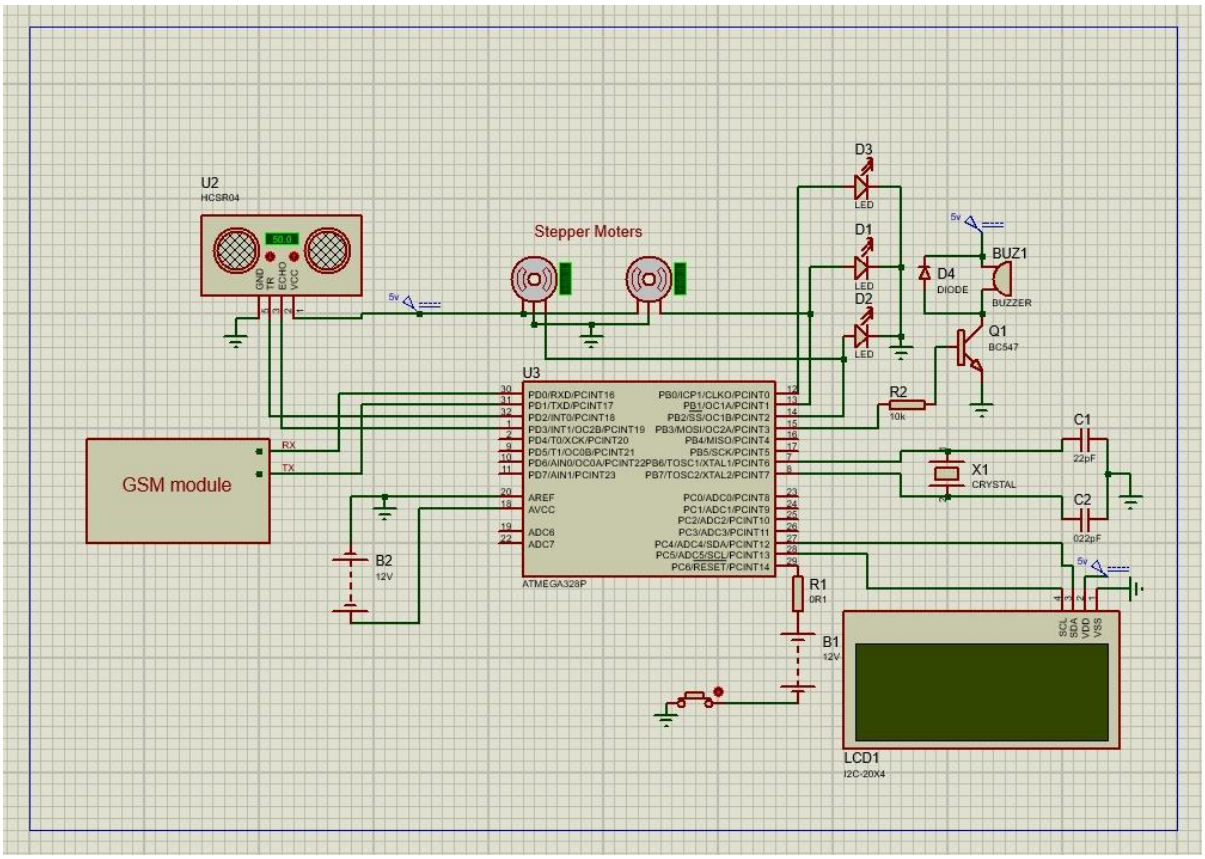

Figure 02:circuit diagram of the project

5. COMMUNICATION PROTOCOLS USED

1. GPIO (General Purpose Input/Output)

- **Purpose**: **Ultrasonic Sensor, LEDs, Buzzer**
- **Explanation**: GPIO pins on the microcontroller (ATmega328P) are used for basic digital input and output operations. In your system:
  - **Ultrasonic Sensor**: The GPIO pins are used to send a trigger signal to the sensor and to receive the echo signal, allowing the microcontroller to measure distance.
  - **LEDs**: The microcontroller controls the LEDs through GPIO pins to indicate different statuses (e.g., SAFE, WARNING, DANGER).
  - **Buzzer**: The buzzer is also controlled via a GPIO pin to provide audible alerts based on system status.

2. I2C (Inter-Integrated Circuit)

- **Purpose**: **LCD Display**
- **Explanation**: I2C is a communication protocol used to interface with peripheral devices using only two wires (SCL for clock and SDA for data).

- **LCD Display**: The I2C protocol is used to communicate with the LCD display. It reduces the complexity of wiring, allowing multiple devices (like the LCD) to share the same communication bus. This is especially beneficial in embedded systems where conserving pin usage on the microcontroller is important.

3. UART (Universal Asynchronous Receiver/Transmitter) (Optional)

- **Purpose**: **Debugging / Future GSM Integration**
- **Explanation**: UART is a serial communication protocol that allows for data exchange between the microcontroller and other devices.
  - **Debugging**: UART can be used for debugging the system by providing a simple way to send and receive data to/from a computer or terminal for monitoring and troubleshooting.
  - **Future GSM Integration**: UART can also be used to connect a GSM module in the future for sending SMS alerts or connecting the system to a mobile network, enhancing the system's functionality for remote monitoring or control.

Protocol	Purpose
GPIO	Ultrasonic sensor, LEDs, buzzer
I2C	LCD display
UART (optional)	Debugging / GSM integration

6. SOFTWARE DESIGN

Programming Language

- Embedded C (AVR-GCC)

Software Functions

1. Trigger ultrasonic sensor
2. Measure echo pulse duration
3. Calculate distance (water level)
4. Compare with predefined thresholds
5. Update LCD display
6. Control LEDs and buzzer
7. Repeat continuously
8. Generate PWM signals to control two servo motors for gate operation
9. Transmit warning messages through GSM module using UART communication

7. WORKING PROCESS

1. System Powers ON: The system is initialized and powered up.
2. LCD Displays Initialization Message: The LCD screen shows a startup message to indicate that the system is ready.
3. Ultrasonic Sensor Measures Water Level: The ultrasonic sensor detects the current water level by measuring the distance to the surface of the water.
4. ATmega328P Processes the Data: The microcontroller processes the sensor data to determine the water level.
5. Based on Water Level:
6. Safe → Green LED: Indicates the water level is within safe limits.
7. Warning → Yellow LED: Warns that the water level is approaching a critical level.
8. Danger → Red LED + Buzzer: Signals that the water level is dangerously high, triggering both the red LED and an audible warning from the buzzer.
9. System Continuously Monitors and Updates Outputs: The system keeps monitoring the water level, updating the LEDs, and triggering alerts as needed.

10. Servo Motor–Based Gate Control

    Servo motors are controlled using **PWM signals generated by Timer1**

    Both servos operate together to ensure balanced and smooth gate opening

    Servos remain in the open position until water level returns to a safe range

11 .GSM-based Remote Warning System

Include:

UART communication
AT commands
SMS alerts
Separate power supply

8. TECHNOLOGIES USED

Hardware

- ATmega328P microcontroller
- HC-SR04 ultrasonic sensor
- LCD (16×2 / 20×4)
- LEDs and buzzer
- GSM module
- Power supply components
- Servo moters

Software

- AVR-GCC
- AVRDUDE
- Proteus ISIS
- GitHub for documentation

9. UNIQUENESS OF THE PROJECT

1. Innovative Aspects of the Project:

- Standalone ATmega328P**:** The system uses a standalone ATmega328P microcontroller instead of an Arduino board, making it more affordable and energy-efficient.
- Low-Cost and Easy Deployment: It uses basic components, making it cheap and easy to set up in remote areas with limited resources.
- Real-Time Monitoring and Alerts**:** The system monitors water levels in real time and provides automatic warnings through LEDs and a buzzer.
- Expandable**:** It can be easily expanded in the future with GSM, IoT, or data logging features.
- Simple and Low Maintenance**:** Compared to other systems, it's simpler, cheaper, and easier to maintain, perfect for rural areas.

2. Comparison with Existing Solutions:

- Traditional Systems**:** Most systems only alert after flooding starts, relying on fixed water levels.
- Commercial IoT Systems: These systems are expensive and need cloud services, which may not be available in rural areas.
- Our system is predictive, low-cost, and doesn't need the cloud or expensive devices. It can be expanded with new features later, but it works offline and is more practical for local communities.

10. BUDGET ESTIMATE

Component	Quantity	Unit Cost	Total Cost (LKR)
ATmega328P	1	450	450
Ultrasonic Sensor	1	600	600
LCD (I2C)	1	700	700
LEDs	5	20	100
Buzzer	1	250	250
Power Supply			350
Miscellaneous			400
Servo Motor	2	550	1100
GSM module	1	1500	1500
Total			**5450 LKR**

11. PROJECT TIMELINE

Phase	Week / Dates	Milestones / Tasks
Research & Design	Week 1 (8 Dec - 14 Dec 2025)	Define project scope and objectives, decide on hardware & software components
Proteus Simulation	Week 2 (15 Dec - 21 Dec 2025)	Prepare and simulate circuit in Proteus for validation
Code Development	Week 3 (22 Dec - 28 Dec 2025)	Develop code for microcontroller, ADC readings, and flood prediction algorithm
Integration & Testing	Week 4 (29 Dec 2025 - 4 Jan 2026)	Integrate hardware and software, test sensors, LEDs, and buzzer
MID Evaluation	Week 6 (16 Jan 2026)	Prepare presentation, demonstrate working prototype, receive feedback
Enhancements	Week 7–10 (17 Jan - 14 Mar 2026)	Refine code and circuit design based on feedback, system testing
Final Demo	Week 12 (14 Mar 2026)	Final demonstration, finalize working system, prepare report and documentation

12. EXPECTED OUTCOME

- Fully simulated working model in Proteus
- Accurate water level detection
- Reliable visual and audible warning
- Ready for real hardware implementation

13.GROUP MEMBERS WORK ALLOCATION

Reg. No	Name	Responsibilities	Reg. No
2022/E/101	Narasingha N.L.H.S	system integration, final testing, Documentation servo & GSM control	2022/E/101
2022/E/018	Adithya B.V.S	Embedded C programming, sensor, servo & GSM control	2022/E/018
2022/E/129	Kaweesha R.G.H	Documentation, presentation, Embedded C programming,	2022/E/129
2022/E/172	Lowe W.N.D	Proteus simulation and verification, Team coordination,	2022/E/172
2022/E/174	Dissanayaka W.A.M.S.K	diagrams, presentation, Hardware circuit design,	2022/E/174