(1) Here,

$V_{DS} = V_{GS} > V_{GS} - V_{Th}$

So, MOSFET is in saturation. — (a)

$i_D = K_n (V_{GS} - V_{Th})^2 = 0.2\times10^{-3} (V_{GS} - 1)^2$

$i_D = \frac{V_{DD} - V_{DS}}{R_D} = \frac{V_{DD} - V_{GS}}{1\,K}$

$\therefore \quad 0.2\times10^{-3} (V_{GS} - 1)^2 = \frac{10 - V_{GS}}{1\,K}$

$\therefore V_{GS} = 5.66, -8.66\ V.$

$V_{GS} < 0$, not possible, so, $V_{GS} = 5.66\ V.$ — (b)

$V_{DS} = 5.66\ V.$ — (c)

$i_D = \frac{V_{DD} - V_{DS}}{R_D} = \frac{10 - 5.66}{1K} = 4.34\ mA.$ — (d)

(2)

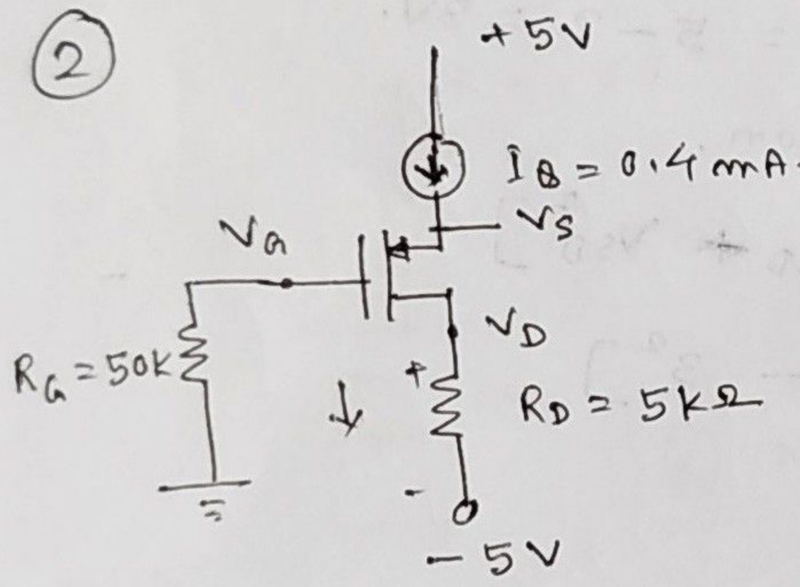

$V_G = 0.$

Let us assume, the MOSFET is in saturation,

$I_Q = I_D = K_p (V_{SG} + V_{Th})^2$

$\therefore 0.4 = 200\times10^{-3} \times (V_S - 0.8)^2$

$\therefore V_S = 2.214\ V.$

$V_{SD} = V_S - V_D.$

$V_D = -5 + I_Q \cdot R_D$

$= -5 + 0.4\times5$

$V_D = -3\ V.$

$\therefore V_{SD} = V_S - V_D = 2.214 - (-3)$

$V_{SD} = 5.214\ V.$

$V_{SD}(sat) = V_{SG} + V_{Th}$

$= 2.214 - 0.8$

$= 1.414\ V.$

as, $V_{SD} > V_{SD}(sat)$.

So, MOSFET is saturation as assumed.

(3) n-ch device

$V_{Th} = 0.6\ V$ $\quad L = 0.8\ \mu m$

$t_{ox} = 200\ Å$ $\quad \mu_n = 600\ cm^2/V\text{-}s.$ $\quad V_{GS} = 3\ V.$ $\quad I_D = 1.2\ mA.$

In saturation, $I_D = K_n (V_{GS} - V_{Th})^2$

$I_D = \frac{1}{2} \mu_n C_{ox} \frac{W}{L} (V_{GS} - V_{Th})^2$

$\therefore 1.2 = \frac{1}{2} \times 600 \times \frac{\epsilon_{ox}}{t_{ox}} \times \frac{W}{0.8\times10^{-4}} (3 - 0.6)^2$

$\frac{\epsilon_{ox}}{t_{ox}} = \frac{8.854\times10^{-14}\times3.9}{200\times10^{-8}}$

$= 1.726\times10^{-7}$

$\therefore 1.2 = 300 \times 1.726\times10^{-7} \times \frac{W}{0.8\times10^{-4}} \times 5.76$

in mA.

$\therefore 1.2 = 3.728 \times W$

mA.

$W = 3.218\ \mu m.$

④ P-channel enhancement mode MOSFET.

$K_P = 2\ mA/V^2$

$V_{TP} = (-)0.5\ V$ Gate (G) terminal is grounded.

Source (S) " " at $+5V$.

$V_G = 0$, $V_S = 5V$. $\therefore V_{SG} = 5V$.

$V_{SD}(sat) = V_{SG} + V_{TP} = 5 - 0.5 = 4.5V$

(i) when, $V_D = 0$, $V_{SD} = 5V > 4.5V$, biased in saturation

So, $I_D = K_P(V_{SG} + V_{TP})^2$

$= 2\times10^{-3}(5-0.5)^2$

$I_D = 40.5\ mA$.

(ii) When, $V_D = 2V$, $V_{SD} = V_S - V_D = 5 - 2 = 3V$.

So, MOSFET is in triode region.

$I_D = K_P[2(V_{SG} + V_{TP})V_{SD} - V_{SD}^2]$

$= 2\times10^{-3}[2(5-0.5)3 - 3^2]$

$I_D = 36\ mA$.

(iii) when, $V_D = 4V$, $V_{SD} = 1V$, so, MOSFET in triode region.

$I_D = K_P[2(V_{SG} + V_{TP})V_{SD} - V_{SD}^2]$

$= 2\times10^{-3}[2(5-0.5)1 - 1]$

$= 16\ mA$.

(iv) When, $V_D = 5V$, $V_{SD} = 0V$, so, no drain current will flow

$\therefore I_D = 0$.

⑤

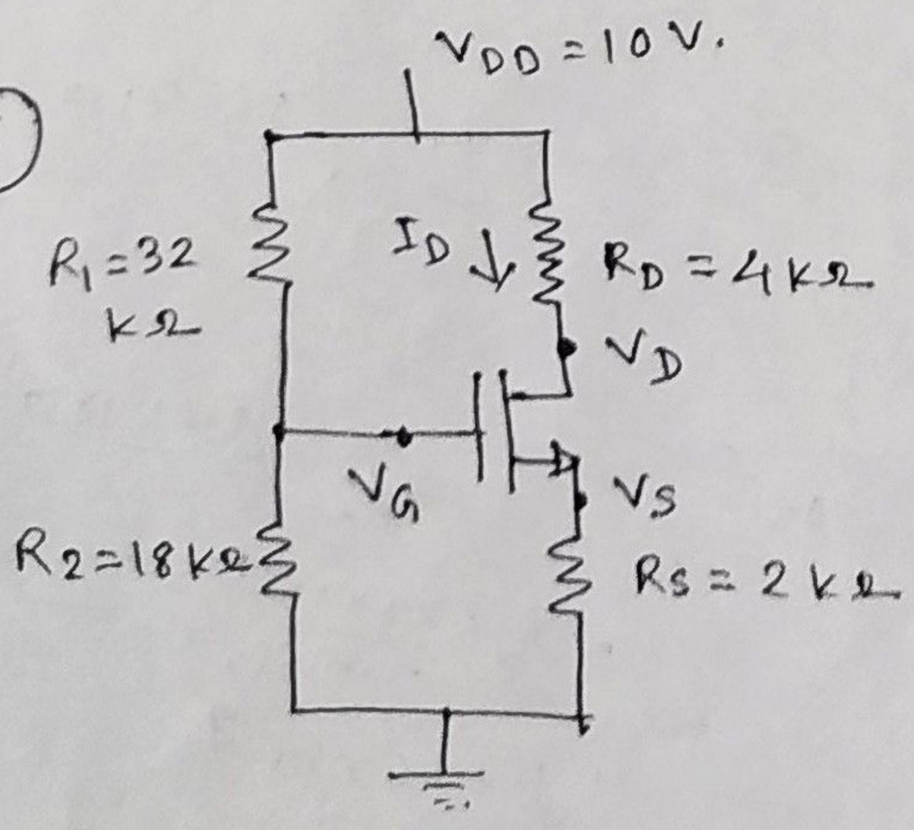

$V_G = V_{DD} \times \frac{R_2}{R_1 + R_2} = 10 \times \frac{18}{18+32}$

$= 3.6V$.

Assuming the MOSFET is in saturation,

$I_D = K_n(V_{GS} - V_{TH})^2$

$= 0.5\times10^{-3} \times (V_{GS} - 0.8)^2$ — ①

Again, $I_D = \frac{V_S}{R_S} = \frac{V_G - V_{GS}}{R_S}$

$I_D = \frac{3.6 - V_{GS}}{R_S}$; $[V_G - V_{GS} = \cancel{V_G} - \cancel{V_G} + V_S = V_S]$ — ②

$\therefore$ From ① & ②,

$0.5\times10^{-3} \times (V_{GS} - 0.8)^2 = \frac{3.6 - V_{GS}}{2\times10^3}$

$\therefore V_{GS}^2 - 1.6V_{GS} + 0.64 = 3.6 - V_{GS}$

$\therefore V_{GS}^2 - 0.6V_{GS} - 2.96 = 0.$

$\therefore V_{GS} = \dfrac{0.6 \pm \sqrt{(0.6)^2 + 4\times(2.96)}}{2}$

$V_{GS} = 2.046\ V.$ — (ii)

$\dfrac{V_S}{R_S} = I_D = \dfrac{V_G - V_{GS}}{R_S} = \dfrac{3.6 - 2.046}{2} = 0.777\ mA.$ — (i)

$V_{DS} = V_{DD} - I_D(R_D + R_S)$

$= 10 - 0.777 \times (4+2)$

$V_{DS} = 5.338\ V.$ ..... (iii)

$V_{DS}(sat) = V_{GS} - V_{Th} = 2.046 - 0.8 = 1.246\ V.$

$V_{DS} > V_{DS}(sat)$, so, MOSFET is in saturation. (our assumption is correct).

(6)

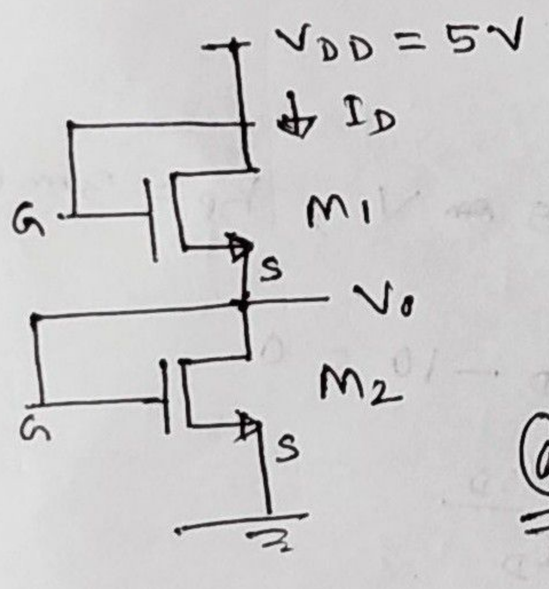

$V_{Th} = 0.4\ V$ $\quad k_n' = 120\ \mu A/V^2$

$\therefore \mu_n C_{ox} = 120\ \mu A/V^2$

$\left(\dfrac{W_1}{L_1}\right) = \left(\dfrac{W_2}{L_2}\right) = 30$

(a) M_1 and M_2 are in saturation as $V_{DS} > V_{DS}(sat)$

$[V_{GS} = V_{DS},\ V_{DS}(sat) = V_{GS} - V_{Th}]$

Same current is flowing through both transistors.

$\therefore k_n(V_{GS_1} - V_{Th})^2 = k_n(V_{GS_2} - V_{Th})^2$

$\therefore \cancel{\tfrac{1}{2}} \cancel{k_n'} \cancel{\left(\tfrac{W}{L}\right)_1}(V_{GS1} - V_{Th})^2 = \cancel{\tfrac{1}{2}} \cancel{k_n'} \cancel{\left(\tfrac{W}{L}\right)_2}(V_{GS} - V_{Th})^2$

$I_D = \frac{1}{2} k_n' \left(\frac{W}{L}\right)_2 (V_{GS2} - V_{Th})^2$

$= \frac{1}{2} \times 120 \times 10^{-6} \times 30 (2.5 - 0.4)^2$

$= 7.938\ mA.$

$\therefore V_{GS1} = V_{GS2}$; V_{Th} same for M_1 & M_2

$V_{DS1} + V_{DS2} = 5V.$

$\therefore V_{GS1} + V_{GS2} = 5V.$; [as $V_G = V_D$].

$2V_{GS1} = 5\ V.$

$\therefore V_{GS1} = 2.5\ V. = V_{GS2} = V_o$

(b) $\left(\dfrac{W}{L}\right)_1 = 30$; $\left(\dfrac{W}{L}\right)_2 = 15$

$\cancel{\tfrac{1}{2}} \cancel{k_n'} \left(\dfrac{W_1}{L_1}\right).(V_{GS1} - V_{Th})^2 = \cancel{\tfrac{1}{2}} \cancel{k_n'} \left(\dfrac{W_2}{L_2}\right)(V_{GS_2} - V_{Th})^2$

$30(V_{GS1} - V_{Th})^2 = 15(V_{GS_2} - V_{Th})^2$

$1.414 V_{GS1} - 1.414 V_{Th} = V_{GS2} - V_{Th} = V_{DS2} - V_{Th} = 5 - V_{GS1} - V_{Th}$

$\therefore 2.414 V_{GS1} = 5 + 0.414 V_{Th} = 5.1656$

$\therefore V_{GS1} = 2.139\ V.$

$\therefore V_{GS2} = (5 - V_{GS1}) = 2.86\ V.$

Find I_D.

(7)

$$I_D = \frac{1}{2} k_p' \frac{W}{L} (V_{SG} + V_{Th})^2$$

$$0.5 = \frac{1}{2} \times 30 \times 10^{-6} \times 20 (V_{SG} - 1.2)$$

$\therefore V_{SG} = 2.49\,V$. , $V_G = 0$. $\therefore V_S = 2.49\,V$

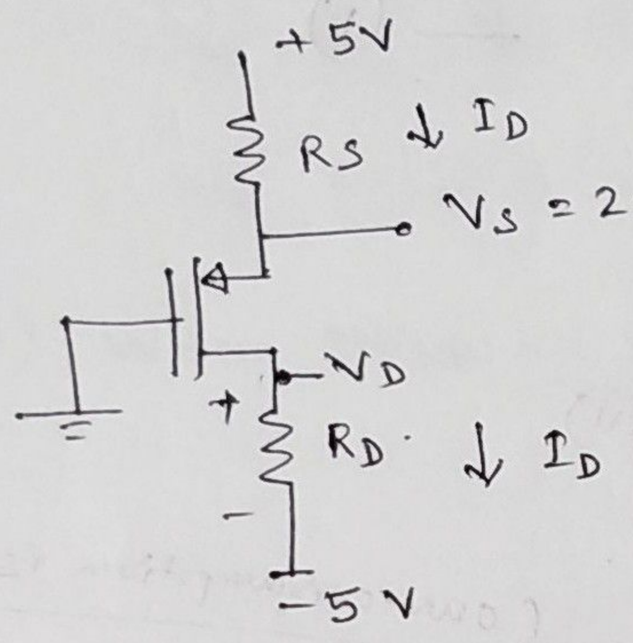

$V_S = 5 - I_D R_S$.

$\therefore R_S = \frac{5 - V_S}{I_D} = \frac{5 - 2.49}{0.5}$

$R_S \cong 5\,k\Omega$.

again, $\frac{V_D - (-5)}{R_D} = I_D$. ; $V_D = -3\,V$ given.

$\therefore R_D = 4\,k\Omega$.

(8)

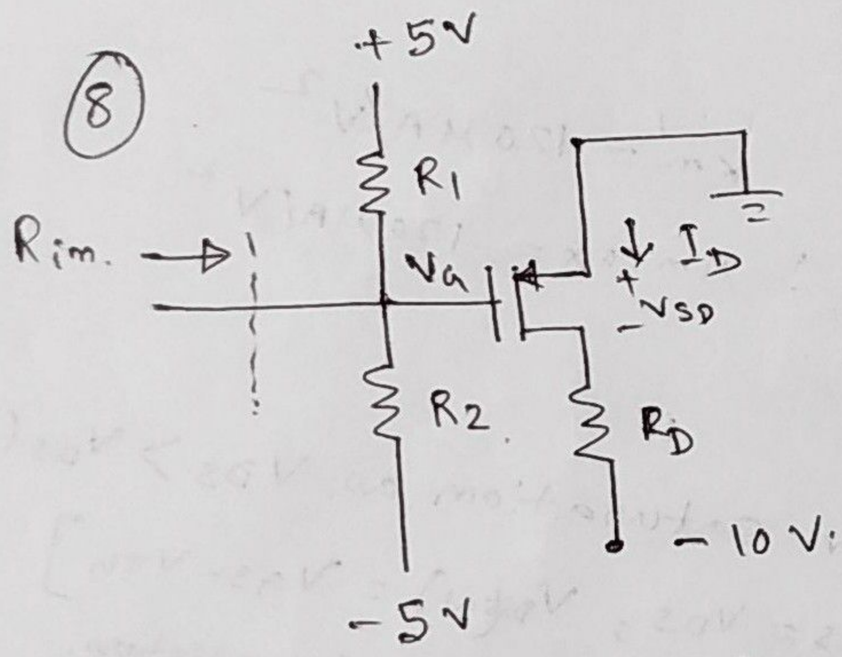

$I_D = 5\,mA$.

$V_{SD} = 6\,V$.

$V_{Th} = -1.75\,V$, $k_p = 3\,mA/V^2$.

$+V_{SD} + I_D R_D - 10 = 0$.

$\therefore R_D = \frac{10 - V_{SD}}{I_D}$

$R_D = \frac{10 - 6}{5\,mA} = 800\,\Omega$.

$R_{in} = 80\,k\Omega = \frac{R_1 R_2}{R_1 + R_2}$ —(1)

$V_G = -5 + (5 - (-5)) \times \frac{R_2}{R_1 + R_2}$

$V_G = -5 + 10 \frac{R_2}{R_1 + R_2}$ —(2)

$I_D = k_p (V_{SG} + V_{Th})^2$

$\therefore 5 = 3 (V_{SG} - 1.75)^2$

$\therefore V_{SG} = 3.04$

$V_S - V_G = 3.04$; $V_S = 0$.

$V_G = -3.04\,V$.

From (2)

$-3.04 = -5 + 10 \frac{R_2}{R_1 + R_2}$

$\therefore 1.96 = 10 \frac{R_1 R_2}{R_1 + R_2} \cdot \frac{1}{R_1}$

$\therefore 1.96 = 10 \times 80 \cdot \frac{1}{R_1}$

From (1)

$\therefore R_1 = \frac{10 \times 80}{1.96}$

$R_1 = 408.16\,k\Omega$.

From, (1), $R_2 = 99.4\,k\Omega$.

(5)

$g_m = 2\sqrt{K_n I_{DQ}}$

$2.2 = 2\sqrt{K_n(6)}$

$\therefore K_n = 0.202\ mA/V^2$

$V_{GSQ} = 2.8\ V.$

$V_{DSQ} = 10V.$

$g_m = 2.2\ mA/V$

$\lambda = 0,\ R_L = 1\ K\Omega$

$A_v = -1,\ R_{in} = 100\ K\Omega$

$g_m = 2.2\ mA/V$

$I_{DQ} = 6\ mA.$

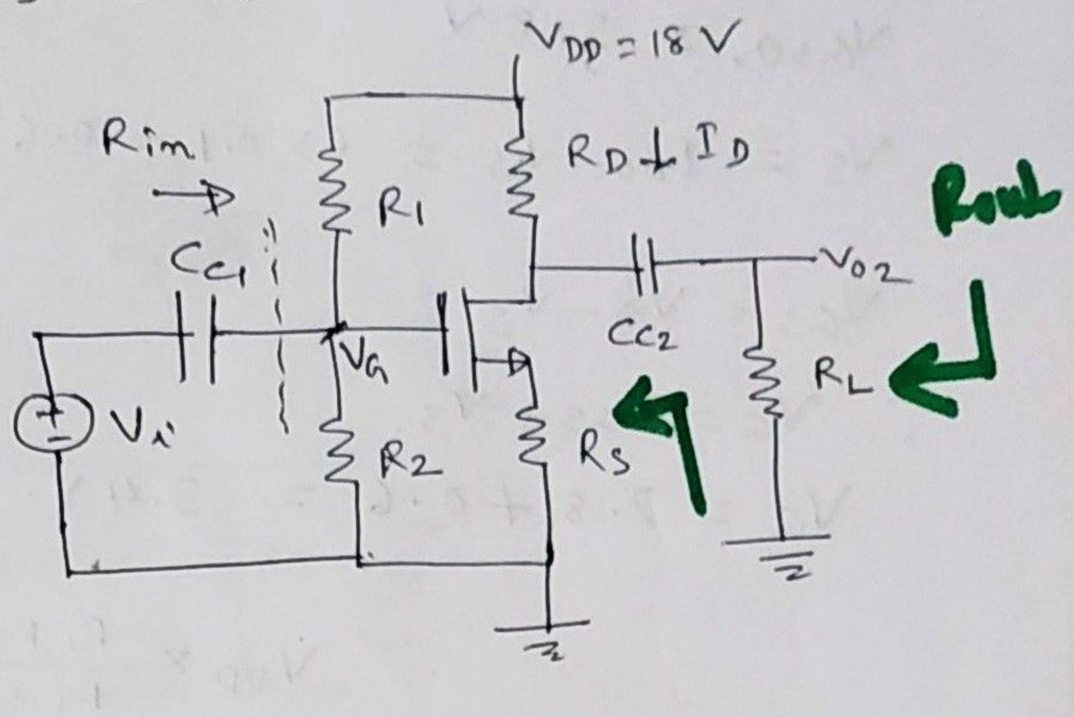

$I_{DQ} = K_n(V_{GSQ} - V_{Th})^2$

$\therefore 6 = 0.202(2.8 - V_{Th})^2$

$\therefore V_{Th} = -2.65\ V$

$V_{DD} = I_{DQ}(R_D + R_S) + V_{DSQ}$

$\therefore V_{DSQ} = V_{DD} - I_{DQ}(R_D + R_S)$

$V_{DSQ} = 18 - 6(R_D + R_S) = 10\ V$ (given).

$\therefore R_D + R_S = 1.33\ K\Omega$ — (1)

given that, $A_v = -1$

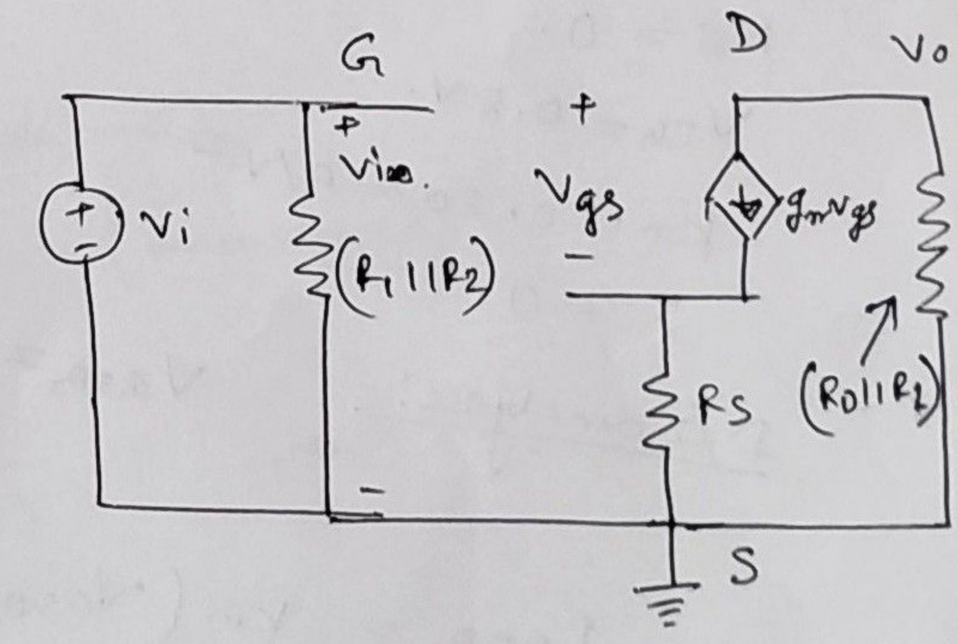

$V_i = V_{gs} + g_m V_{gs} R_S.$

$\therefore V_{gs} = \dfrac{V_i}{1 + g_m R_S}.$

$V_o = -g_m V_{gs}(R_D \| R_L)$

$V_o = -g_m \dfrac{V_i}{1 + g_m R_S}(R_D \| R_L)$

$\therefore V_o = -\dfrac{g_m(R_D \| R_L)}{1 + g_m R_S} V_i$

$\therefore \dfrac{V_o}{V_i} = A_v = -\dfrac{g_m(R_D \| R_L)}{1 + g_m R_S} = -1$ — (2)

$g_m(R_D \| R_L) = 1 + g_m R_S$; substitute $R_S = 1.33 - R_D$ from (1).

$\therefore g_m(R_D \| R_L) = 1 + g_m(1.33 - R_D)$

g_m, R_L, known, Find R_D

$2.2R_D^2 + 0.47R_D - 3.93 = 0$

$R_D = 1.23\ K\Omega.$; neglect the (−) value.

$R_S = 1.33 - 1.23 = 0.1\ K\Omega$

Rin value given, $R_{in} = (R_1 \| R_2) = \frac{R_1 \times R_2}{R_1 + R_2} = 100\ k\Omega$. — (3)

P-6

$V_{GSQ} = 2.8\ V$

$V_S = I_{DQ} \cdot R_S = 6 \times 0.1 = 0.6\ V$.

$V_{GS} = V_G - V_S$

$\therefore V_G = V_{GS} + V_S$.

$V_G = 2.8 + 0.6 = 3.4\ V = V_{DD} \times \frac{R_2}{R_1 + R_2}$

$\therefore V_{DD} \times \frac{R_1 R_2}{R_1 + R_2} \times \frac{1}{R_1} = 3.4$

$\therefore 18 \times 100 \times \frac{1}{R_1} = 3.4$

$\therefore R_1 = 529\ k\Omega$.

From, (3) Find R_2.; $R_2 = 123\ k\Omega$.

(10)

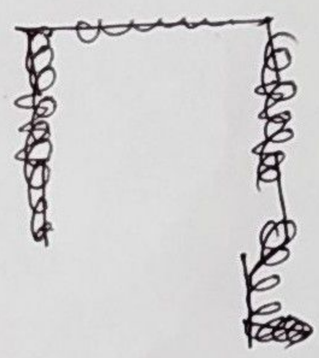

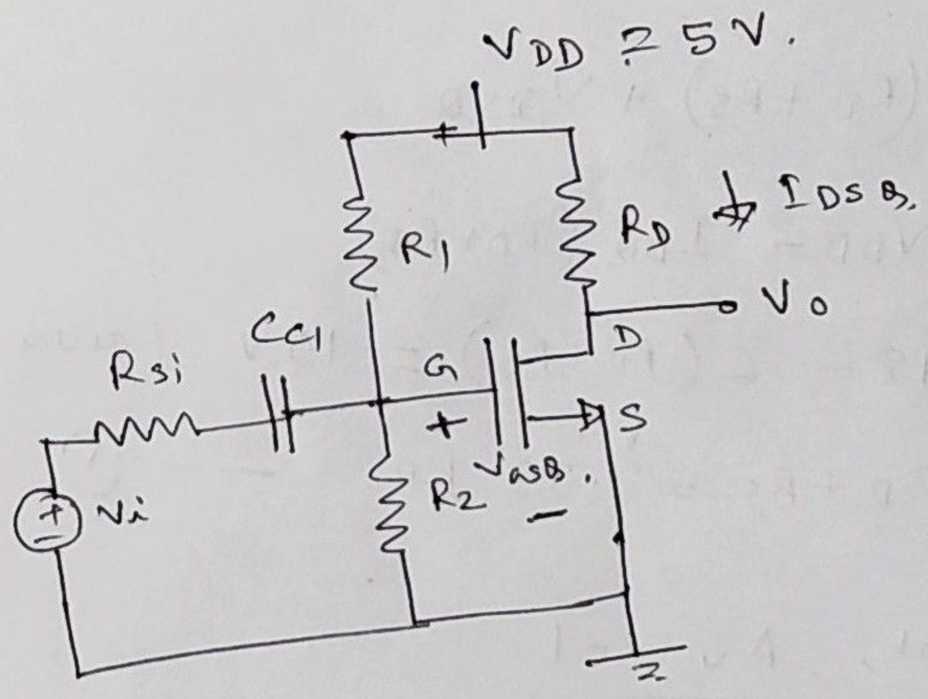

$R_1 = 520\ k\Omega$

$R_2 = 320\ k\Omega$

$R_D = 10\ k\Omega$

$R_{si} = 0$.

$V_{Th} = 0.8\ V$.

$K_n = 0.20\ mA/V^2$

$\lambda = 0$.

DC analysis: $V_{GSQ} = \left(\frac{R_2}{R_1 + R_2}\right) \times V_{DD} = \left(\frac{320}{520 + 320} \times 5V\right)$

$= 1.9\ V$.

$I_{DSQ} = K_n (V_{GSQ} - V_{Th})^2 = 0.2\ (1.9 - 0.8)^2$

$= 0.242\ mA$.

$\therefore V_{DSQ} = V_{DD} - I_{DSQ} \cdot R_D$

$= 5 - 0.242 \times 10$

$= 2.58\ V$.

$V_{GSQ} - V_{Th} = 1.1$

As, $V_{DSQ} > V_{GSQ} - V_{Th}$, the MOSFET is biased in saturation region.

(a) Small-signal parameter.

$$g_m = 2\sqrt{K_n I_{DSQ}}$$

$$= 2\sqrt{0.2 \times 0.242}$$

$$g_m = 0.44 \text{ mS}$$

$r_o = \infty$ as $\lambda = 0$. $\left[r_o = \frac{1}{\lambda I_{DSQ}} \right]$

(b)

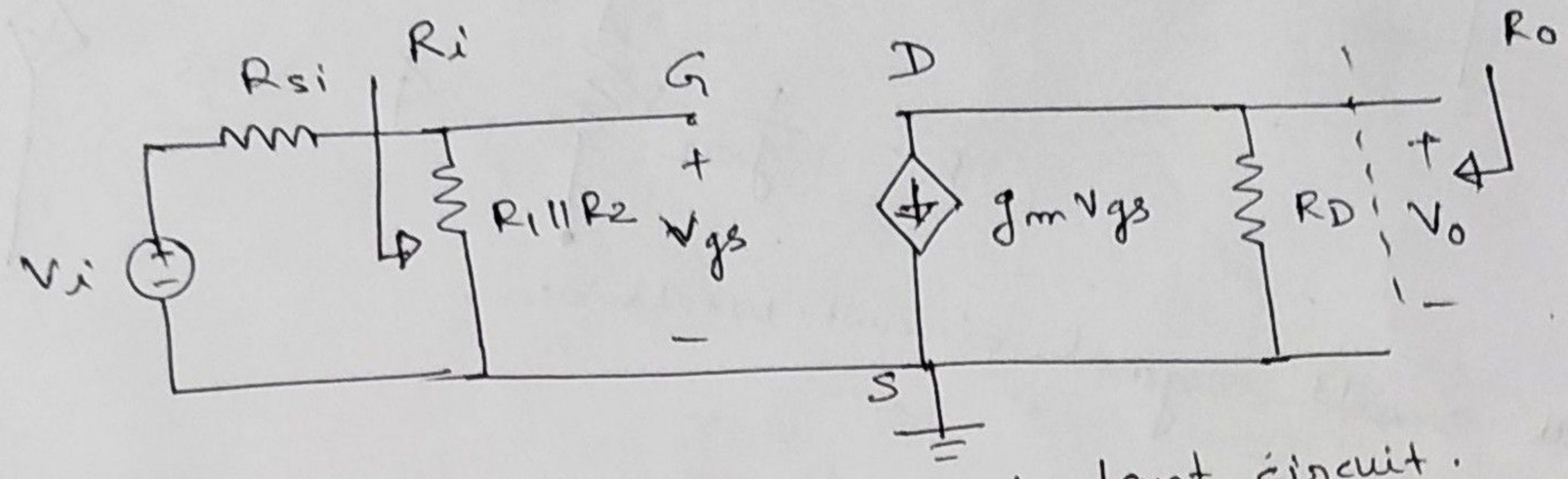

Small-signal equivalant circuit.

$$R_1 \| R_2 = \frac{520 \times 320}{520 \times 320} \text{ k}\Omega = 198.09 \text{ k}\Omega.$$

$$V_o = -g_m R_D V_{gs}$$

$$V_o = -g_m R_D \times \frac{R_1 \| R_2}{R_{si} + R_1 \| R_2} \times V_i$$

$$\therefore \frac{V_o}{V_i} = -g_m R_D \times \frac{R_1 \| R_2}{R_{si} + R_1 \| R_2}$$ (general expression).

$$A_v = -0.44 \times 10 \times \frac{198.09}{0 + 198.09}$$; $R_{si} = 0$ for this case (b).

$$A_v = -4.4$$

(c) Input impedance $= R_i = R_1 \| R_2 = 198 \text{ k}\Omega$.

output " $= R_o = R_D = 10 \text{ k}\Omega$.

(d) When, $R_{si} = 1 \text{ k}\Omega$.

g_m remains unchanged (0.44 mS).

$$r_o = \frac{1}{\lambda I_{DSQ}} = \frac{1}{0} = \infty$$ (unchanged).

$$\text{gain } A_v = -4.4 \times \frac{198.09}{1 + 198.09} \approx -4.37.$$

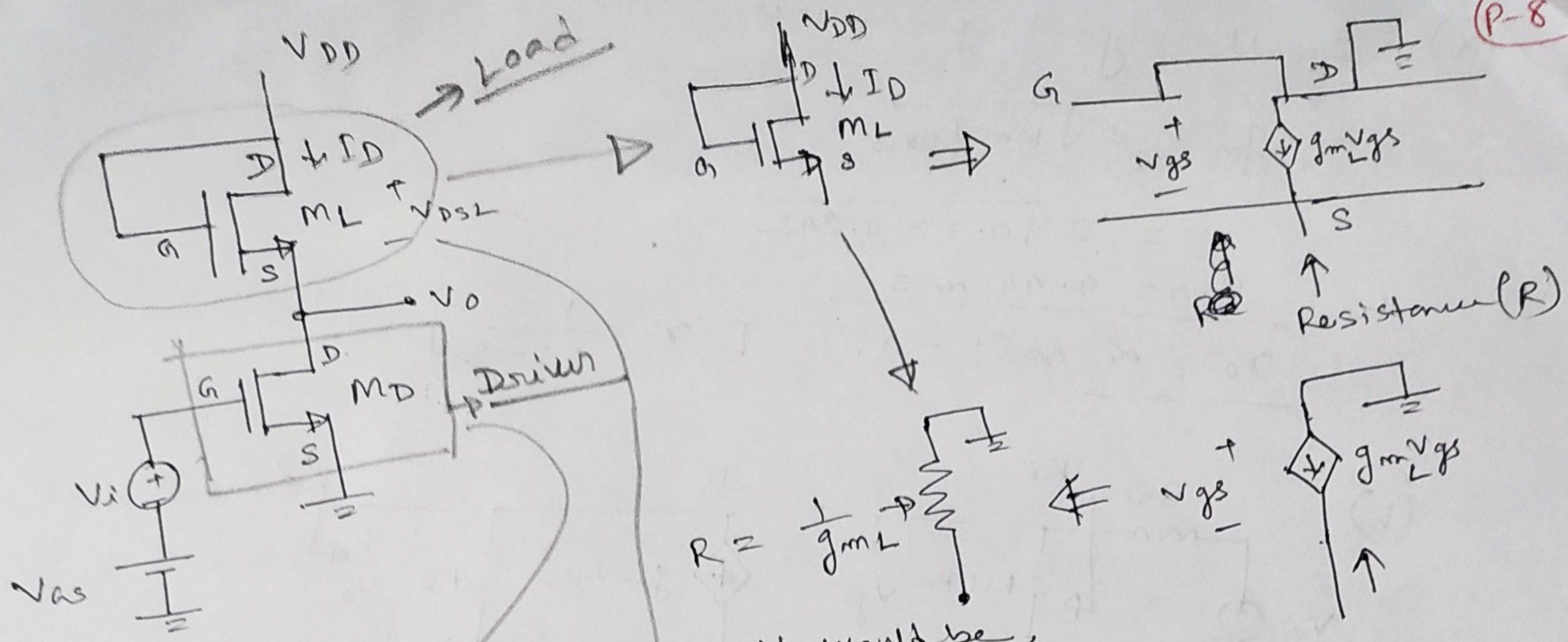

So, the overall small signal circuit would be,

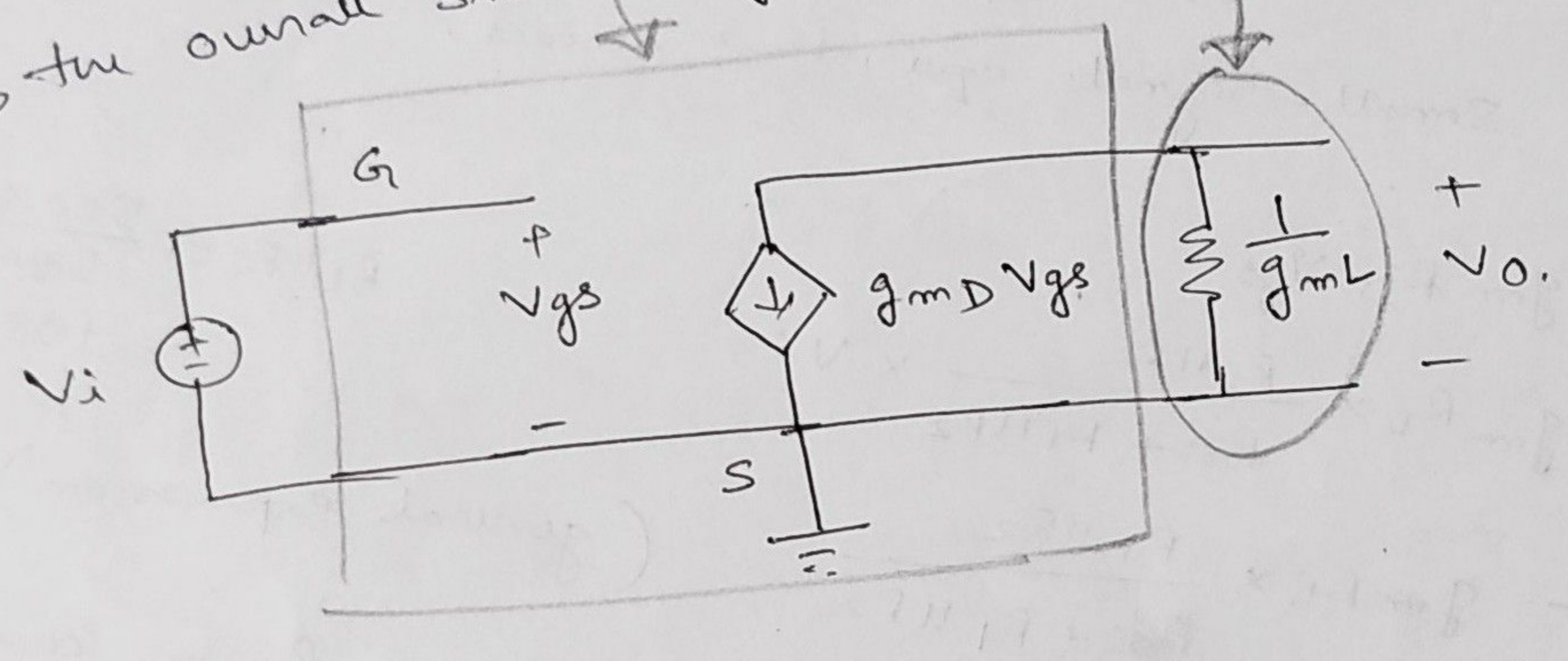

$$V_o = -g_{mD} V_{gs} \cdot \frac{1}{g_{mL}} = -\frac{g_{mD}}{g_{mL}} \cdot V_i$$

$$\text{gain } |A_v| = \frac{g_{mD}}{g_{mL}} = \left|\frac{V_o}{V_i}\right|$$

$$\frac{g_{mD}}{g_{mL}} = |A_v| = 5 \text{ (given)}.$$

$$\therefore \frac{\sqrt{K_{nD} I_D}}{\sqrt{K_{nL} I_D}} = 5 \qquad \therefore \sqrt{\frac{(W/L)_D}{(W/L)_L}} = 5$$

$$\therefore \left(\frac{W}{L}\right)_D = 25 \left(\frac{W}{L}\right)_L = 25 \times 1$$

$$\left(\frac{W}{L}\right)_D = 25$$