Mini Project: Systems Thinking 2025

Control of a 2-Link Manipulator

Team Name: Stabilizers

October 9, 2025

Team Members

- **Chanda Akshay Kumar**
  - Roll Number: 2024102014
  - Email: chanda.kumar@students.iiit.ac.in
- **Rithik Reddy Palla**
  - Roll Number: 2024102005
  - Email: rithik.palla@students.iiit.ac.in
- **R KRS Kowshikh Reddy**
  - Roll Number: 2024102053
  - Email: regalla.k@students.iiit.ac.in
- **Ganipisetty Nischal**
  - Roll Number: 2024102070
  - Email: ganipisetty.nischal@students.iiit.ac.in
- **Gunda Yaswanth Vardhan**
  - Roll Number: 2024102012
  - Email: yaswanth.gunda@students.iiit.ac.in
- **Sale Sangameshwar**
  - Roll Number: 2024102017
  - Email: sangameshwar.sale@students.iiit.ac.in

Contents

1 Introduction **5**
1.1 Problem Statement . . . 5
1.2 Control Objective . . . 5

2 System Dynamics **5**
2.1 Inertia Matrix . . . 5
2.2 Coriolis and Centrifugal Matrix . . . 5
2.3 Gravity Vector . . . 5
2.4 System Parameters . . . 6

3 Derivation of System Dynamics Using Lagrangian Mechanics **6**
3.1 Lagrangian Formulation Overview . . . 6
3.2 System Configuration and Coordinate Frames . . . 6
3.3 Position Analysis . . . 7
3.3.1 Position of Link 1 Center of Mass . . . 7
3.3.2 Position of Link 2 Center of Mass . . . 7
3.4 Velocity Analysis . . . 7
3.4.1 Velocity of Link 1 Center of Mass . . . 7
3.4.2 Velocity of Link 2 Center of Mass . . . 8
3.5 Kinetic Energy . . . 8
3.5.1 Kinetic Energy of Link 1 . . . 8
3.5.2 Kinetic Energy of Link 2 . . . 8
3.5.3 Total Kinetic Energy . . . 8
3.6 Potential Energy . . . 9
3.6.1 Potential Energy of Link 1 . . . 9
3.6.2 Potential Energy of Link 2 . . . 9
3.6.3 Total Potential Energy . . . 9
3.7 Lagrangian . . . 9
3.8 Application of Euler-Lagrange Equations . . . 9
3.8.1 For Joint 1 (q_1) . . . 9
3.8.2 For Joint 2 (q_2) . . . 10
3.9 Matrix Form of Equations of Motion . . . 11

4 2-Link Manipulator: System Dynamics **11**

5 Error Signal Definitions **11**
5.1 Initial Positions: . . . 12
5.2 Modeling PID Group Output: . . . 12

6 Simplified Equations for 2-Link Manipulator **12**
6.1 In Terms of k_p, k_d, k_i Only . . . 13
6.2 Given Numerical Parameters: . . . 13
6.3 Computed System Matrices: . . . 13
6.3.1 Inertia Matrix: . . . 13
6.3.2 Coriolis Terms (Combined with velocities): . . . 13
6.3.3 Gravity Terms: . . . 13
6.4 Determinant of M: . . . 13

6.5 Inverse Matrix Elements: . . . 13
6.6 Final Simplified Equations: . . . 13
6.6.1 For $\ddot{q}_1$: . . . 13
6.6.2 For $\ddot{q}_2$: . . . 14
6.7 Compact Final Form: . . . 14

7 State-Space Representation of 2-Link Manipulator System 14
7.1 Definition of State Variables: . . . 15
7.2 Target Configuration: . . . 15
7.3 State-Space Form: . . . 16
7.4 Explicit Dynamics Functions: . . . 16
7.5 Initial Conditions: . . . 16

8 MATLAB Implementation using ODE45: 17
8.1 Extracting Key Variables for Analysis: . . . 17
8.2 Performance Metrics: . . . 17

9 Simulation Results 18
9.1 Controller 1: Proportional Control . . . 18
9.1.1 Performance Analysis . . . 19
9.2 Controller 2: Proportional and derivative Control(PD control) . . . 20
9.2.1 Performance Analysis . . . 21
9.3 Controller 3: Proportional and integral Control(PI control) . . . 23
9.3.1 Performance Analysis . . . 24
9.4 Controller 4: PID Control . . . 25
9.4.1 Performance Analysis . . . 26

10 Comparative Analysis 28
10.1 Performance Metrics . . . 28
10.2 Discussion on Desired Performance . . . 28
10.3 Conclusion on Controller Gains . . . 28

11 MATLAB Code 30
11.1 Manipulator Response Function . . . 31
11.2 Main Simulation Script . . . 32

12 Simulink 32
12.1 Plots . . . 33
12.1.1 Controller 1: Proportional Control . . . 34
12.1.2 Controller 2: Proportional and derivative Control(PD control) . . . 35
12.1.3 Controller 3: Proportional and integral Control(PI control) . . . 37
12.1.4 Controller 4: PID Control . . . 39
12.2 MATLAB CODE . . . 41

13 Conclusion 42

14 Contributions **45**
14.1 latex 45
14.2 Matlab Code 45
14.3 Simulink Code 45
14.4 Video 45

1 Introduction

↑ Back to Contents

This project investigates the control of a 2-link planar manipulator using three fundamental control strategies. The objective is to drive the manipulator from an initial configuration to a desired equilibrium position while analyzing the performance characteristics of each controller.

1.1 Problem Statement

The 2-link manipulator system is described by the nonlinear dynamics equation:

$$M(q)\ddot{q} + C(q, \dot{q})\dot{q} + G(q) = \tau \tag{1}$$

where $q = [q_1, q_2]^T$ represents joint angles, $M(q)$ is the inertia matrix, $C(q, \dot{q})$ is the Coriolis and centrifugal forces matrix, $G(q)$ is the gravity vector, and τ is the control torque vector.

1.2 Control Objective

Drive the manipulator from initial configuration $q(0) = [0.2, 0.15]^T$ rad to the desired configuration $q_{desired} = [0, 0]^T$ rad.

2 System Dynamics

↑ Back to Contents

2.1 Inertia Matrix

The inertia matrix $M(q)$ is given by:

$$M(q) = \begin{bmatrix} M_{11} & M_{12} \\ M_{21} & M_{22} \end{bmatrix} \tag{2}$$

where:

$$M_{11} = (m_1 + m_2)l_1^2 + m_2 l_2(l_2 + 2l_1 \cos q_2) \tag{3}$$
$$M_{12} = M_{21} = m_2 l_2(l_2 + l_1 \cos q_2) \tag{4}$$
$$M_{22} = m_2 l_2^2 \tag{5}$$

2.2 Coriolis and Centrifugal Matrix

$$C(q, \dot{q}) = \begin{bmatrix} -m_2 l_1 l_2 \sin q_2 \cdot \dot{q}_2 & -m_2 l_1 l_2 \sin q_2(\dot{q}_1 + \dot{q}_2) \\ 0 & m_2 l_1 l_2 \sin q_2 \cdot \dot{q}_1 \end{bmatrix} \tag{6}$$

2.3 Gravity Vector

$$G(q) = \begin{bmatrix} m_1 l_1 g \cos q_1 + m_2 g(l_2 \cos(q_1 + q_2) + l_1 \cos q_1) \\ m_2 g l_2 \cos(q_1 + q_2) \end{bmatrix} \tag{7}$$

2.4 System Parameters

Parameter	Value
m_1	5 kg
m_2	3 kg
l_1	0.25 m
l_2	0.15 m
g	9.81 m/s^2
$q_1(0)$	0.2 rad
$q_2(0)$	0.15 rad

Table 1: System parameters and initial conditions

3 Derivation of System Dynamics Using Lagrangian Mechanics

↑ Back to Contents

3.1 Lagrangian Formulation Overview

The Lagrangian approach provides a systematic method to derive the equations of motion for mechanical systems. The Lagrangian $\mathcal{L}$ is defined as:

$$\mathcal{L} = T - V \tag{8}$$

where T is the total kinetic energy and V is the total potential energy of the system. The equations of motion are obtained using the Euler-Lagrange equation:

$$\frac{d}{dt}\left(\frac{\partial \mathcal{L}}{\partial \dot{q}_i}\right) - \frac{\partial \mathcal{L}}{\partial q_i} = \tau_i \tag{9}$$

for each generalized coordinate q_i, where τ_i represents the generalized force (torque) applied at joint i.

3.2 System Configuration and Coordinate Frames

Consider a planar 2-link manipulator with:

- Link 1: mass m_1, length l_1, with center of mass at distance $l_{c1} = \frac{l_1}{2}$ from joint 1
- Link 2: mass m_2, length l_2, with center of mass at distance $l_{c2} = \frac{l_2}{2}$ from joint 2
- q_1: absolute angle of link 1 from horizontal
- q_2: relative angle of link 2 with respect to link 1

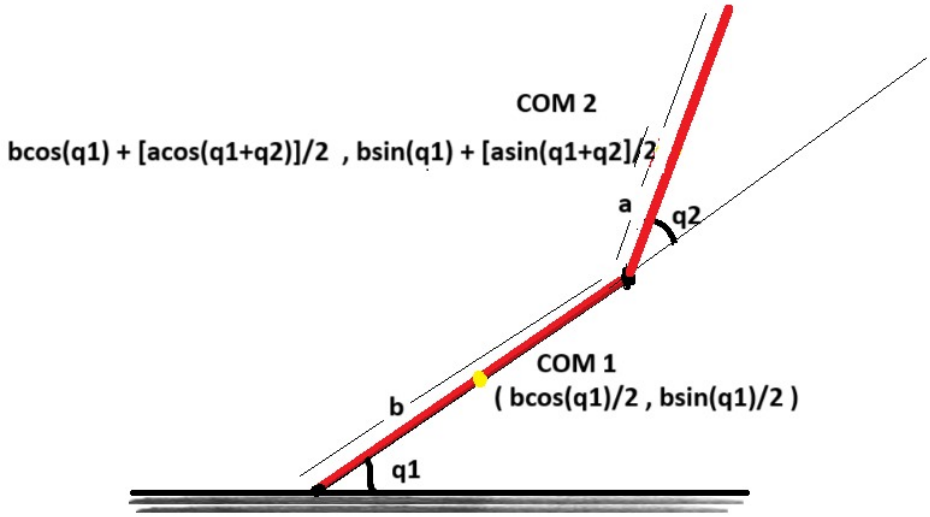

Figure 1: Schematic of 2-Link Planar Manipulator with Coordinate System and Parameters

3.3 Position Analysis

3.3.1 Position of Link 1 Center of Mass

The position of the center of mass of link 1 in Cartesian coordinates:

$$x_{c1} = l_{c1}\cos(q_1) = \frac{l_1}{2}\cos(q_1) \tag{10}$$

$$y_{c1} = l_{c1}\sin(q_1) = \frac{l_1}{2}\sin(q_1) \tag{11}$$

3.3.2 Position of Link 2 Center of Mass

The position of the center of mass of link 2:

$$x_{c2} = l_1\cos(q_1) + l_{c2}\cos(q_1+q_2) = l_1\cos(q_1) + \frac{l_2}{2}\cos(q_1+q_2) \tag{12}$$

$$y_{c2} = l_1\sin(q_1) + l_{c2}\sin(q_1+q_2) = l_1\sin(q_1) + \frac{l_2}{2}\sin(q_1+q_2) \tag{13}$$

3.4 Velocity Analysis

3.4.1 Velocity of Link 1 Center of Mass

Taking time derivatives:

$$\dot{x}_{c1} = -\frac{l_1}{2}\sin(q_1)\dot{q}_1 \tag{14}$$

$$\dot{y}_{c1} = \frac{l_1}{2}\cos(q_1)\dot{q}_1 \tag{15}$$

The velocity magnitude squared:

$$v_{c1}^2 = \dot{x}c1^2 + \dot{y}c1^2 = \frac{l_1^2}{4}\dot{q}_1^2 \tag{16}$$

3.4.2 Velocity of Link 2 Center of Mass

$$\dot{x}_{c2} = -l_1\sin(q_1)\dot{q}_1 - \frac{l_2}{2}\sin(q_1+q_2)(\dot{q}_1+\dot{q}_2) \tag{17}$$

$$\dot{y}_{c2} = l_1\cos(q_1)\dot{q}_1 + \frac{l_2}{2}\cos(q_1+q_2)(\dot{q}_1+\dot{q}_2) \tag{18}$$

The velocity magnitude squared:

$$\begin{aligned} v_{c2}^2 &= \dot{x}c2^2 + \dot{y}c2^2 \\ &= l_1^2\dot{q}_1^2 + \frac{l_2^2}{4}(\dot{q}_1+\dot{q}_2)^2 + l_1 l_2\cos(q_2)\dot{q}_1(\dot{q}_1+\dot{q}_2) \end{aligned} \tag{19}$$

3.5 Kinetic Energy

For a planar manipulator, assuming point masses at centers of mass (or neglecting rotational inertia of links):

3.5.1 Kinetic Energy of Link 1

$$T_1 = \frac{1}{2}m_1 v_{c1}^2 = \frac{1}{2}m_1 \cdot \frac{l_1^2}{4}\dot{q}_1^2 = \frac{m_1 l_1^2}{8}\dot{q}_1^2 \tag{20}$$

3.5.2 Kinetic Energy of Link 2

$$\begin{aligned} T_2 &= \frac{1}{2}m_2 v_{c2}^2 \\ &= \frac{1}{2}m_2\left[l_1^2\dot{q}_1^2 + \frac{l_2^2}{4}(\dot{q}_1+\dot{q}_2)^2 + l_1 l_2\cos(q_2)\dot{q}_1(\dot{q}_1+\dot{q}_2)\right] \end{aligned} \tag{21}$$

3.5.3 Total Kinetic Energy

$$\begin{aligned} T &= T_1 + T_2 \\ &= \frac{m_1 l_1^2}{8}\dot{q}_1^2 + \frac{m_2}{2}\left[l_1^2\dot{q}_1^2 + \frac{l_2^2}{4}(\dot{q}_1+\dot{q}_2)^2 + l_1 l_2\cos(q_2)\dot{q}_1(\dot{q}_1+\dot{q}_2)\right] \end{aligned} \tag{22}$$

Expanding and simplifying:

$$T = \frac{1}{2}\left[\left(\frac{m_1}{4} + m_2\right) l_1^2 + \frac{m_2 l_2^2}{4} + m_2 l_1 l_2 \cos(q_2)\right] \dot{q}_1^2 + \frac{m_2 l_2^2}{8}\dot{q}_2^2 + \frac{m_2 l_2}{4}(2l_1\cos(q_2) + l_2)\dot{q}_1\dot{q}_2 \tag{23}$$

Note: For simplification in the given problem, if we assume the entire mass is concentrated at the end of each link (i.e., $l_{c1} = l_1$ and $l_{c2} = l_2$), we obtain:

$$\boxed{T = \frac{1}{2}\left[(m_1 + m_2)l_1^2 + m_2 l_2^2 + 2m_2 l_1 l_2 \cos(q_2)\right] \dot{q}_1^2 + \frac{1}{2}m_2 l_2^2 \dot{q}_2^2 + m_2 l_2 (l_2 + l_1\cos(q_2))\dot{q}_1\dot{q}_2} \tag{24}$$

3.6 Potential Energy

The potential energy is due to gravity (taking the base as reference height):

3.6.1 Potential Energy of Link 1

$$V_1 = m_1 g y_{c1} = m_1 g \cdot \frac{l_1}{2}\sin(q_1) \tag{25}$$

For mass at end: $V_1 = m_1 g l_1 \sin(q_1)$

3.6.2 Potential Energy of Link 2

$$V_2 = m_2 g y_{c2} = m_2 g \left[l_1 \sin(q_1) + \frac{l_2}{2}\sin(q_1 + q_2)\right] \tag{26}$$

For mass at end: $V_2 = m_2 g[l_1 \sin(q_1) + l_2 \sin(q_1 + q_2)]$

3.6.3 Total Potential Energy

$$\boxed{V = m_1 g l_1 \sin(q_1) + m_2 g[l_1 \sin(q_1) + l_2 \sin(q_1 + q_2)]} \tag{27}$$

3.7 Lagrangian

The Lagrangian is:

$$\mathcal{L} = T - V \tag{28}$$

3.8 Application of Euler-Lagrange Equations

3.8.1 For Joint 1 (q_1)

We need to compute:

$$\frac{d}{dt}\left(\frac{\partial \mathcal{L}}{\partial \dot{q}_1}\right) - \frac{\partial \mathcal{L}}{\partial q_1} = \tau_1 \tag{29}$$

Step 1: Compute $\frac{\partial T}{\partial \dot{q}_1}$:

$$\frac{\partial T}{\partial \dot{q}_1} = [(m_1 + m_2)l_1^2 + m_2 l_2^2 + 2m_2 l_1 l_2 \cos(q_2)]\dot{q}_1$$
$$+ m_2 l_2 (l_2 + l_1 \cos(q_2))\dot{q}_2 \tag{30}$$
$$= M_{11}\dot{q}1 + M12\dot{q}_2 \tag{31}$$

Step 2: Compute $\frac{d}{dt}\left(\frac{\partial T}{\partial \dot{q}_1}\right)$:

$$\frac{d}{dt}\left(\frac{\partial T}{\partial \dot{q}1}\right) = M11\ddot{q}1 + M12\ddot{q}2 + \frac{dM11}{dt}\dot{q}1 + \frac{dM12}{dt}\dot{q}_2 \tag{32}$$

where:

$$\frac{dM_{11}}{dt} = -2m_2 l_1 l_2 \sin(q_2)\dot{q}_2 \tag{33}$$
$$\frac{dM_{12}}{dt} = -m_2 l_1 l_2 \sin(q_2)\dot{q}_2 \tag{34}$$

Step 3: Compute $\frac{\partial T}{\partial q_1}$:

$$\frac{\partial T}{\partial q_1} = 0 \quad \text{(since } T \text{ doesn't explicitly depend on } q_1\text{)} \tag{35}$$

Step 4: Compute $\frac{\partial V}{\partial q_1}$:

$$\frac{\partial V}{\partial q_1} = m_1 g l_1 \cos(q_1) + m_2 g[l_1 \cos(q_1) + l_2 \cos(q_1 + q_2)] \tag{36}$$
$$= G_1 \tag{37}$$

Step 5: Combine terms:

$$M_{11}\ddot{q}1 + M12\ddot{q}_2 - 2m_2 l_1 l_2 \sin(q_2)\dot{q}_1\dot{q}_2$$
$$- m_2 l_1 l_2 \sin(q_2)\dot{q}_2^2 + G_1 = \tau_1 \tag{38}$$

3.8.2 For Joint 2 (q_2)

Similarly, we compute:

$$\frac{d}{dt}\left(\frac{\partial \mathcal{L}}{\partial \dot{q}_2}\right) - \frac{\partial \mathcal{L}}{\partial q_2} = \tau_2 \tag{39}$$

Following similar steps, we obtain:

$$M_{12}\ddot{q}1 + M22\ddot{q}_2 + m_2 l_1 l_2 \sin(q_2)\dot{q}_1^2 + G_2 = \tau_2 \tag{40}$$

3.9 Matrix Form of Equations of Motion

Combining both equations in matrix form:

$$\boxed{\begin{bmatrix} M_{11} & M_{12} \\ M_{12} & M_{22} \end{bmatrix} \begin{bmatrix} \ddot{q}_1 \\ \ddot{q}_2 \end{bmatrix} + \begin{bmatrix} -m_2 l_1 l_2 \sin(q_2)\dot{q}_2 & -m_2 l_1 l_2 \sin(q_2)(\dot{q}_1 + \dot{q}_2) \\ 0 & m_2 l_1 l_2 \sin(q_2)\dot{q}_1 \end{bmatrix} \begin{bmatrix} \dot{q}_1 \\ \dot{q}_2 \end{bmatrix} + \begin{bmatrix} G_1 \\ G_2 \end{bmatrix} = \begin{bmatrix} \tau_1 \\ \tau_2 \end{bmatrix}} \tag{41}$$

This is exactly the form:

$$\boxed{M(q)\ddot{q} + C(q,\dot{q})\dot{q} + G(q) = \tau} \tag{42}$$

where all the matrices $M(q)$, $C(q,\dot{q})$, and $G(q)$ are defined as given in the problem statement.

4 2-Link Manipulator: System Dynamics

↑ Back to Contents

The system dynamic equation for a 2-link manipulator can be expressed as:

$$M(q)\ddot{q} + C(q,\dot{q})\dot{q} + G(q) = \tau \tag{43}$$

Where:

- $M(q)$ is a 2×2 inertia matrix
- q is a 2×1 matrix vector: $q = \begin{bmatrix} q_1 \\ q_2 \end{bmatrix}$
- $C(q,\dot{q})$ is a 2×1 Coriolis matrix
- $\dot{q}$ is a 2×1 matrix vector: $\dot{q} = \begin{bmatrix} \dot{q}_1 \\ \dot{q}_2 \end{bmatrix}$
- G is a 2×1 gravity matrix

Solving for $\ddot{q}$:

Now, solving for $\ddot{q}$, we have:

$$\Rightarrow M(q)\ddot{q} = \tau - [C(q,\dot{q})\dot{q} + G(q)] \tag{44}$$

$$\Rightarrow \ddot{q} = M^{-1}(q)[\tau - (C(q,\dot{q})\dot{q} + G(q))] \tag{45}$$

$$\Rightarrow \ddot{q} = M^{-1}(q)\tau - M^{-1}(q)[C(q,\dot{q})\dot{q} + G(q)] \longrightarrow [I] \tag{46}$$

5 Error Signal Definitions

↑ Back to Contents

The tracking error signals are defined as follows:

$$e(q_1) = q_{1f} - q_1 \tag{47}$$
$$e(q_2) = q_{2f} - q_2 \tag{48}$$

Where the target positions of Manipulator Arm 1 and 2 are given by the angles q_{1f} and q_{2f}.

5.1 Initial Positions:

The initial positions of the system are given as:

$$q_0 = \begin{bmatrix} q_1(0) \\ q_2(0) \end{bmatrix} = \begin{bmatrix} 0.2 \\ 0.15 \end{bmatrix} \quad \rightarrow \text{ as provided in the question} \tag{49}$$

5.2 Modeling PID Group Output:

The PID controller output is modeled as:

$$\tau = k_p e + k_D \dot{e} + k_I \int e \, dt \tag{50}$$

$$\tau = \begin{bmatrix} \tau_1 \\ \tau_2 \end{bmatrix} \tag{51}$$

For τ_1:

$$\begin{aligned} \tau_1 &= k_{p_1} e_1(q_1) + k_{D_1} \dot{e}_1(q_1) + k_{I_1} \int e_1(q_1) dt \\ &= k_{p_1}(q_{1f} - q_1) + k_{D_1}(\dot{q}_{1f} - \dot{q}_1) + k_{I_1} \int (q_{1f} - q_1) dt \\ &= k_{p_1}(q_{1f} - q_1) - k_{D_1} \dot{q}_1 + k_{I_1} \int (q_{1f} - q_1) dt \end{aligned} \tag{52}$$

For τ_2:

$$\begin{aligned} \tau_2 &= k_{p_2} e_2(q_2) + k_{D_2} \dot{e}_2(q_2) + k_{I_2} \int e_2(q_2) dt \\ &= k_{p_2}(q_{2f} - q_2) + k_{D_2}(\dot{q}_{2f} - \dot{q}_2) + k_{I_2} \int (q_{2f} - q_2) dt \\ &= k_{p_2}(q_{2f} - q_2) - k_{D_2} \dot{q}_2 + k_{I_2} \int (q_{2f} - q_2) dt \end{aligned} \tag{53}$$

6 Simplified Equations for 2-Link Manipulator

↑ Back to Contents

6.1 In Terms of k_p, k_d, k_i Only

6.2 Given Numerical Parameters:

$$\begin{aligned} m_1 &= 5 \text{ kg}, \quad m_2 = 3 \text{ kg} \\ l_1 &= 0.25 \text{ m}, \quad l_2 = 0.15 \text{ m} \\ g &= 9.81 \text{ m}\cdot\text{s}^{-2} \end{aligned}$$

6.3 Computed System Matrices:

6.3.1 Inertia Matrix:

$$M(q) = \begin{bmatrix} 0.5675 + 0.225\cos q_2 & 0.0675 + 0.1125\cos q_2 \\ 0.0675 + 0.1125\cos q_2 & 0.0675 \end{bmatrix} \tag{54}$$

6.3.2 Coriolis Terms (Combined with velocities):

$$C_1 = C(q,\dot{q})\dot{q}\Big|_{\text{row 1}} = -0.1125\sin q_2 \cdot \dot{q}_2 \cdot \dot{q}_1 - 0.1125\sin q_2(\dot{q}_1 + \dot{q}_2)\cdot\dot{q}_2 \tag{55}$$

$$= -0.1125\sin q_2(2\dot{q}_1\dot{q}_2 + \dot{q}_2^2) \tag{56}$$

$$C_2 = C(q,\dot{q})\dot{q}\Big|_{\text{row 2}} = 0.1125\sin q_2 \cdot \dot{q}_1 \cdot \dot{q}_2 \tag{57}$$

6.3.3 Gravity Terms:

$$G_1 = 19.62\cos q_1 + 7.3575\cos(q_1 + q_2) \tag{58}$$

$$G_2 = 4.4145\cos(q_1 + q_2) \tag{59}$$

6.4 Determinant of M:

$$\det(M) = 0.03375 + 0.0000075\cos q_2 - 0.01265625\cos^2 q_2 \tag{60}$$

6.5 Inverse Matrix Elements:

$$M_{11}^{-1} = \frac{0.0675}{\det(M)} \tag{61}$$

$$M_{12}^{-1} = M_{21}^{-1} = \frac{-(0.0675 + 0.1125\cos q_2)}{\det(M)} \tag{62}$$

$$M_{22}^{-1} = \frac{0.5675 + 0.225\cos q_2}{\det(M)} \tag{63}$$

6.6 Final Simplified Equations:

6.6.1 For $\ddot{q}_1$:

$$\boxed{\begin{aligned} \ddot{q}_1 = &- k_{p_1} q_1 - k_{d_1}\dot{q}_1 - k_{i_1}\int q_1\,dt \\ &- M_{11}^{-1}[C_1 + G_1] - M_{12}^{-1}[C_2 + G_2] \end{aligned}} \tag{64}$$

Expanding:

$$\boxed{\begin{aligned}\ddot{q}_1 = &- k_{p_1} q_1 - k_{d_1}\dot{q}_1 - k_{i_1}\int q_1\,dt \\ &- \frac{0.0675}{\det(M)}\Big[-0.1125\sin q_2(2\dot{q}_1\dot{q}_2 + \dot{q}_2^2) + 19.62\cos q_1 \\ &\quad + 7.3575\cos(q_1+q_2)\Big] \\ &+ \frac{0.0675 + 0.1125\cos q_2}{\det(M)}\Big[0.1125\sin q_2 \cdot \dot{q}_1\dot{q}_2 + 4.4145\cos(q_1+q_2)\Big]\end{aligned}} \tag{65}$$

6.6.2 For $\ddot{q}_2$:

$$\boxed{\begin{aligned}\ddot{q}_2 = &- k_{p_2} q_2 - k_{d_2}\dot{q}_2 - k_{i_2}\int q_2\,dt \\ &- M_{21}^{-1}[C_1 + G_1] - M_{22}^{-1}[C_2 + G_2]\end{aligned}} \tag{66}$$

Expanding:

$$\boxed{\begin{aligned}\ddot{q}_2 = &- k_{p_2} q_2 - k_{d_2}\dot{q}_2 - k_{i_2}\int q_2\,dt \\ &+ \frac{0.0675 + 0.1125\cos q_2}{\det(M)}\Big[-0.1125\sin q_2(2\dot{q}_1\dot{q}_2 + \dot{q}_2^2) \\ &\quad + 19.62\cos q_1 + 7.3575\cos(q_1+q_2)\Big] \\ &- \frac{0.5675 + 0.225\cos q_2}{\det(M)}\Big[0.1125\sin q_2 \cdot \dot{q}_1\dot{q}_2 + 4.4145\cos(q_1+q_2)\Big]\end{aligned}} \tag{67}$$

6.7 Compact Final Form:

$$\boxed{\ddot{q}_1 = -k_{p_1} q_1 - k_{d_1}\dot{q}_1 - k_{i_1}\int q_1\,dt + \mathcal{N}_1(q_1, q_2, \dot{q}_1, \dot{q}_2)} \tag{68}$$

$$\boxed{\ddot{q}_2 = -k_{p_2} q_2 - k_{d_2}\dot{q}_2 - k_{i_2}\int q_2\,dt + \mathcal{N}_2(q_1, q_2, \dot{q}_1, \dot{q}_2)} \tag{69}$$

where $\mathcal{N}_1$ and $\mathcal{N}_2$ represent the nonlinear coupling terms (Coriolis and gravity effects) as detailed in the expanded forms above.

7 State-Space Representation of 2-Link Manipulator System

↑ Back to Contents

7.1 Definition of State Variables:

To convert the second-order differential equations into a first-order system, we define the following state variables:

$$x_1 = q_1 \quad \text{(Angular position of link 1)} \tag{70}$$
$$x_2 = q_2 \quad \text{(Angular position of link 2)} \tag{71}$$
$$x_3 = \dot{q}_1 \quad \text{(Angular velocity of link 1)} \tag{72}$$
$$x_4 = \dot{q}_2 \quad \text{(Angular velocity of link 2)} \tag{73}$$
$$x_5 = \int e_1(q_1)\, dt \quad \text{(Integral of error for joint 1)} \tag{74}$$
$$x_6 = \int e_2(q_2)\, dt \quad \text{(Integral of error for joint 2)} \tag{75}$$

The state vector is:

$$\mathbf{x} = \begin{bmatrix} x_1 \\ x_2 \\ x_3 \\ x_4 \\ x_5 \\ x_6 \end{bmatrix} = \begin{bmatrix} q_1 \\ q_2 \\ \dot{q}_1 \\ \dot{q}_2 \\ \int e_1 dt \\ \int e_2 dt \end{bmatrix} \tag{76}$$

State Variable Derivatives:

The time derivatives of the state variables are computed as follows:

$$\dot{x}_1 = \dot{q}_1 = x_3 \tag{77}$$
$$\dot{x}_2 = \dot{q}_2 = x_4 \tag{78}$$
$$\dot{x}_3 = \ddot{q}_1 = \phi(x_1, x_2, x_3, x_4, t; x_5, x_6) \tag{79}$$
$$\dot{x}_4 = \ddot{q}_2 = \psi(x_1, x_2, x_3, x_4, t; x_5, x_6) \tag{80}$$
$$\dot{x}_5 = e_1(q_1) = q_{1f} - q_1 = q_{1f} - x_1 = 0 - x_1 = -x_1 \tag{81}$$
$$\dot{x}_6 = e_2(q_2) = q_{2f} - q_2 = q_{2f} - x_2 = 0 - x_2 = -x_2 \tag{82}$$

where ϕ and ψ are nonlinear functions representing the dynamics from our previously derived equations.

7.2 Target Configuration:

The desired final angles for the manipulator arms are:

$$q_{final} = \begin{bmatrix} q_{1f} \\ q_{2f} \end{bmatrix} = \begin{bmatrix} 0 \\ 0 \end{bmatrix} \text{ rad} \tag{83}$$

This means we want both links to reach the horizontal reference position.

7.3 State-Space Form:

The complete system can be written in the standard state-space form:

$$\dot{\mathbf{x}} = \mathbf{f}(\mathbf{x}, t) \tag{84}$$

where:

$$\dot{\mathbf{x}} = \frac{d\mathbf{x}}{dt} = \begin{bmatrix} \dot{x}_1 \\ \dot{x}_2 \\ \dot{x}_3 \\ \dot{x}_4 \\ \dot{x}_5 \\ \dot{x}_6 \end{bmatrix} = \begin{bmatrix} x_3 \\ x_4 \\ \phi(x_1, x_2, x_3, x_4, x_5, x_6) \\ \psi(x_1, x_2, x_3, x_4, x_5, x_6) \\ -x_1 \\ -x_2 \end{bmatrix} \tag{85}$$

7.4 Explicit Dynamics Functions:

From our previously derived equations, we have:

$$\phi(x_1, x_2, x_3, x_4, x_5, x_6) = \ddot{q}_1 = -k_{p_1} x_1 - k_{d_1} x_3 - k_{i_1} x_5 + \mathcal{N}_1(x_1, x_2, x_3, x_4) \tag{86}$$

$$\psi(x_1, x_2, x_3, x_4, x_5, x_6) = \ddot{q}_2 = -k_{p_2} x_2 - k_{d_2} x_4 - k_{i_2} x_6 + \mathcal{N}_2(x_1, x_2, x_3, x_4) \tag{87}$$

where $\mathcal{N}_1$ and $\mathcal{N}_2$ contain the nonlinear terms including:

- Coriolis and centrifugal forces (functions of $\sin x_2$, x_3, x_4)
- Gravitational forces (functions of $\cos x_1$, $\cos(x_1 + x_2)$)
- Inertial coupling effects through $M^{-1}(x_1, x_2)$

7.5 Initial Conditions:

The initial state of the system is specified as:

$$\mathbf{x}(0) = \begin{bmatrix} x_1(0) \\ x_2(0) \\ x_3(0) \\ x_4(0) \\ x_5(0) \\ x_6(0) \end{bmatrix} = \begin{bmatrix} 0.2 \\ 0.15 \\ 0 \\ 0 \\ 0 \\ 0 \end{bmatrix} \tag{88}$$

Interpretation:

- Initial joint angles: $q_1(0) = 0.2$ rad, $q_2(0) = 0.15$ rad
- Initial angular velocities: $\dot{q}_1(0) = 0$ rad/s, $\dot{q}_2(0) = 0$ rad/s
- Initial integral values: Both set to zero (system starts from rest)

8 MATLAB Implementation using ODE45:

↑ Back to Contents

We will now use all of the above defined and discussed terms and equations in the matlab code

In MATLAB, the `ode45` solver is a function/method used to numerically integrate/-solve a system of differential equations.

Command Syntax:

```
[t, x] = ode45(@(t,x)odefun(t, x), tspan, x0)
```

Parameters:

- `odefun(t, x)`: Function that returns the derivative vector $\dot{\mathbf{x}}$
- `tspan`: Time interval for simulation, e.g., `[0, 10]` for 0 to 10 seconds
- `x0`: Initial state vector $\mathbf{x}(0) = [0.2, 0.15, 0, 0, 0, 0]^T$

Outputs:

- `t`: Column vector of time points
- `x`: Matrix where each row corresponds to the state vector at time `t(i)`

8.1 Extracting Key Variables for Analysis:

After solving the ODE, the main variables of interest are:

$$q_1(t) = x(:, 1) \quad \text{(Joint 1 angle trajectory)} \tag{89}$$
$$q_2(t) = x(:, 2) \quad \text{(Joint 2 angle trajectory)} \tag{90}$$

These values represent the actual angles of the manipulator arms over time and can be compared against the desired final configuration $[0, 0]^T$ to evaluate the controller performance.

Below in Section 8 provided is the basic form of matlab code we have used, it defines a function *state_equ*(odefun) and passes it to the ode45 function along with the simulation time(*t_span*) and the initial state vector conditions(x0)

8.2 Performance Metrics:

The system performance can be evaluated using:

- **Tracking error:** $e_1(t) = 0 - q_1(t)$, $e_2(t) = 0 - q_2(t)$
- **Settling time:** Time required for $|e_i(t)| < \epsilon$ (e.g., $\epsilon = 0.01$ rad)
- **Overshoot:** Maximum deviation from desired position
- **Steady-state error:** $\lim_{t\to\infty} e_i(t)$

9 Simulation Results

↑ Back to Contents

We will now see the behaviour of the system under different types of controllers and their combinations and will see in the end that proper combination of all three(P,I,D) gives the best results

Below simulation plots are obtained from matlab code provided in section 8.

9.1 Controller 1: Proportional Control

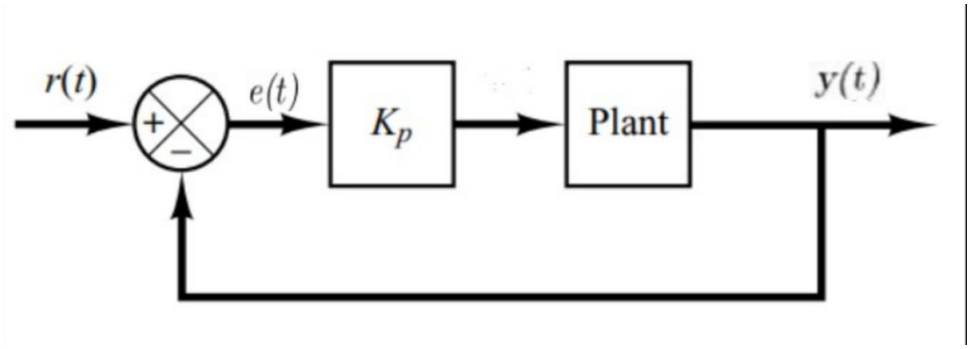

Figure 2: Block diagram for proportional controller

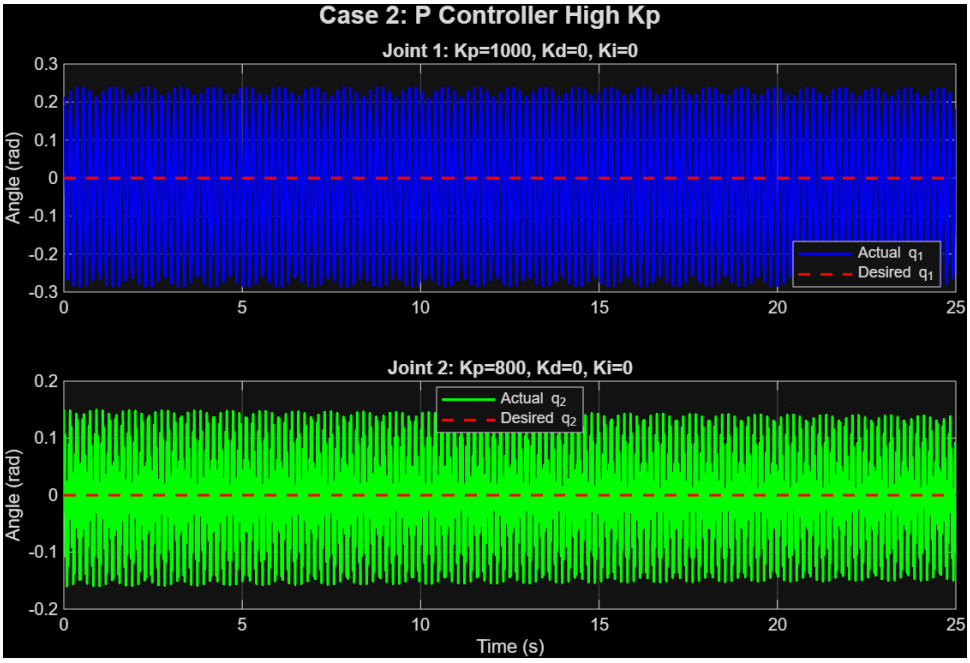

Figure 3: Joint angles $q_1(t)$ and $q_2(t)$ under Proportional control for High K_p

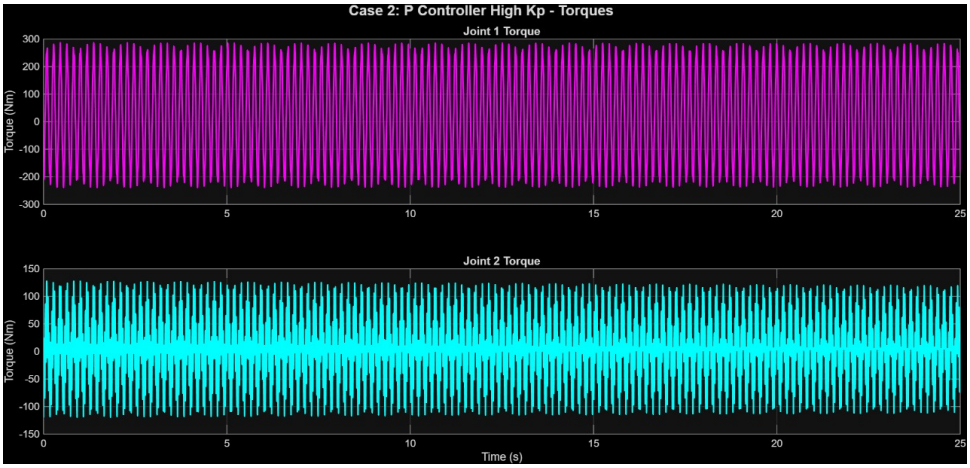

Figure 4: Control torques for $\tau_1(t)$ and $\tau_2(t)$ under Proportional control for high K_p

9.1.1 Performance Analysis

- By using proportional control, the error between the system response and the desired response is amplified.
- This amplified error is fed back into the control system as motor torque applied to each link of the 2-link manipulator.
- Increasing the proportional gain improves the settling time of the system response.
- A higher proportional gain reduces the steady-state error.
- However, increasing the proportional gain also introduces oscillations in the system.
- These oscillations cause an increase in the overshoot of the joint angle responses $q_1(t)$ and $q_2(t)$.

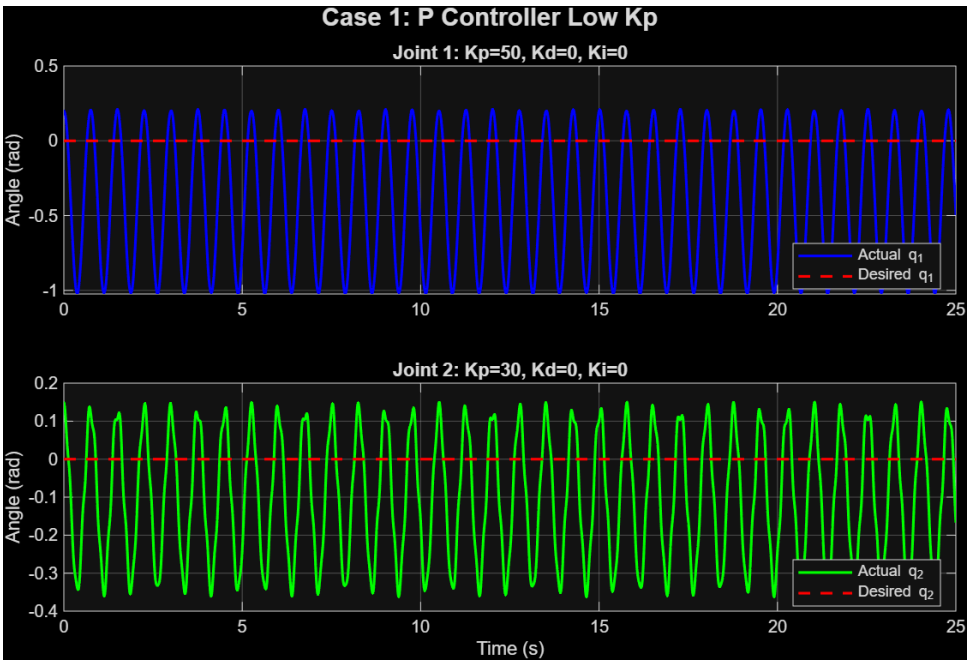

Figure 5: Joint angles $q_1(t)$ and $q_2(t)$ under Proportional control for low K_p

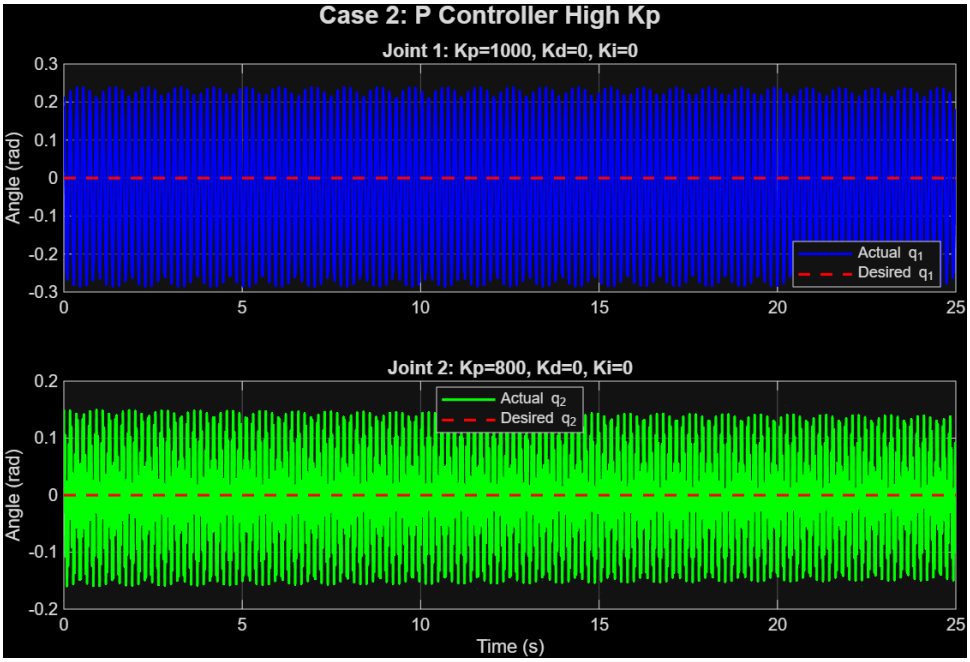

Figure 6: Joint angles $q_1(t)$ and $q_2(t)$ under Proportional control for High K_p

9.2 Controller 2: Proportional and derivative Control(PD control)

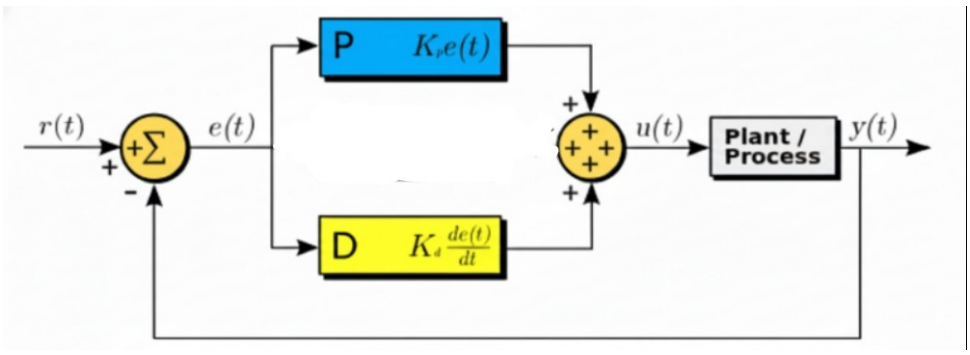

Figure 7: Block diagram for proportional and derivative controller

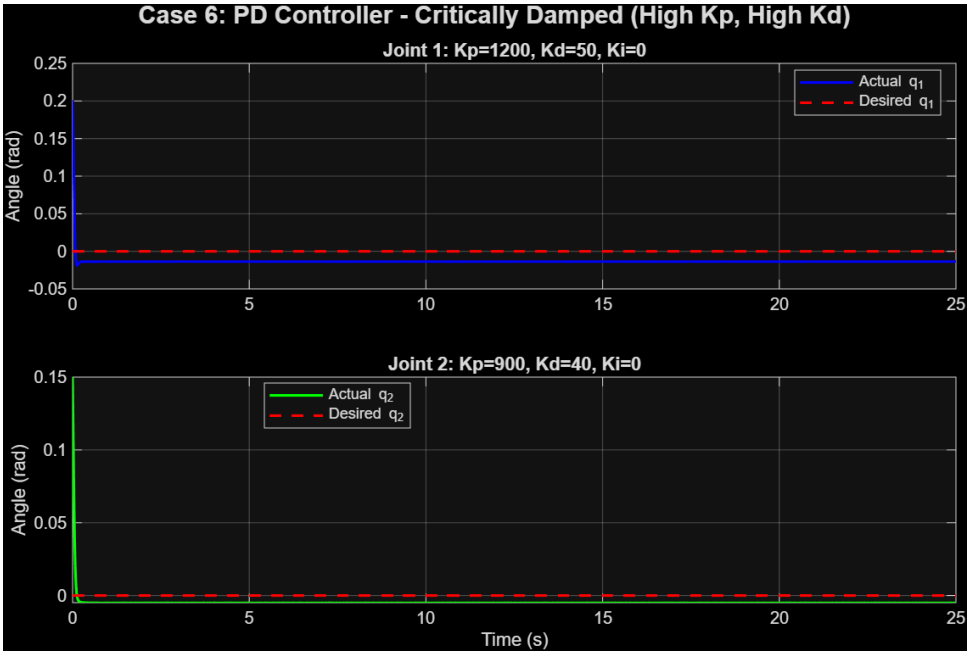

Figure 8: Joint angles $q_1(t)$ and $q_2(t)$ under PD control for High K_p,High k_d

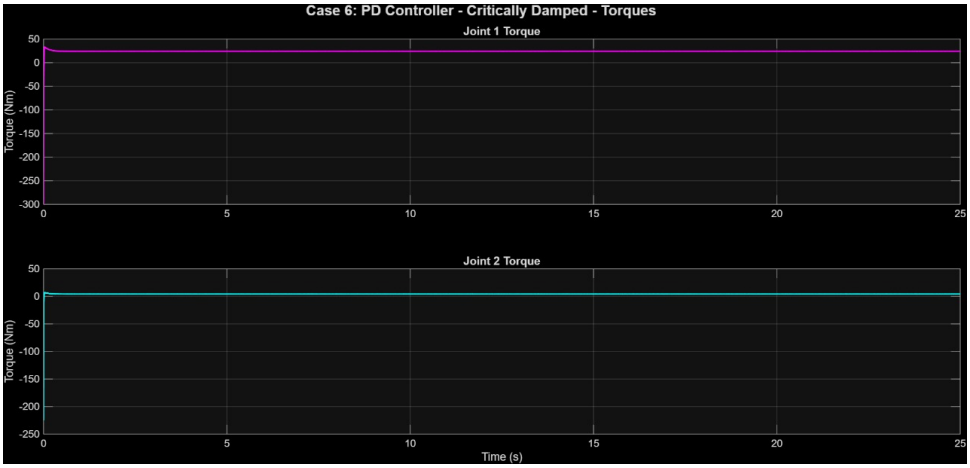

Figure 9: Control torques for $\tau_1(t)$ and $\tau_2(t)$ under PD control for High K_p,High k_d

9.2.1 Performance Analysis

- By using PD control we not only amplify the error between the system response and the desired response (P control) but also consider the rate of change of this error (D control).
- The proportional term contributes to reducing the steady-state error by generating a corrective torque proportional to the instantaneous error, while the derivative term predicts the system's behavior and applies a damping effect to reduce oscillations which increased previously.
- The combined control signal is then fed back into the system in the form of motor torques applied to the 2-link manipulator.

- We now observe the effect of the changes of the gains of both the proportional and the derivative control. When we increase both the gains, due to the proportional control the settling time improves, steady-state error decreases and the derivative control decreases the overshoot (which was previously increased by P control) effectively counteracting the negative effects of increase in P control gain.

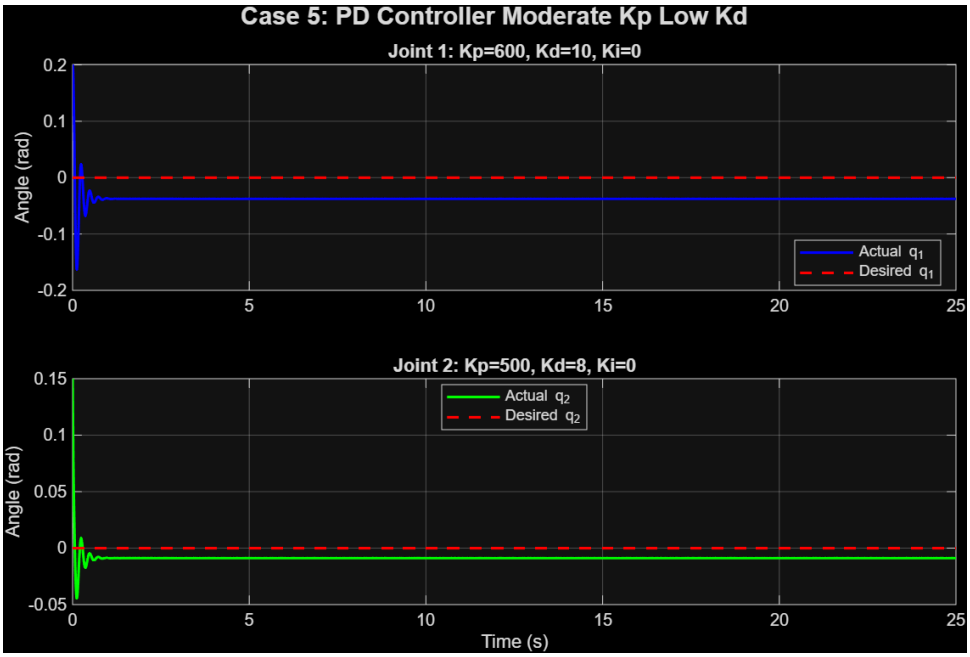

Figure 10: Joint angles $q_1(t)$ and $q_2(t)$ under PD control for Moderate K_p,Low K_d

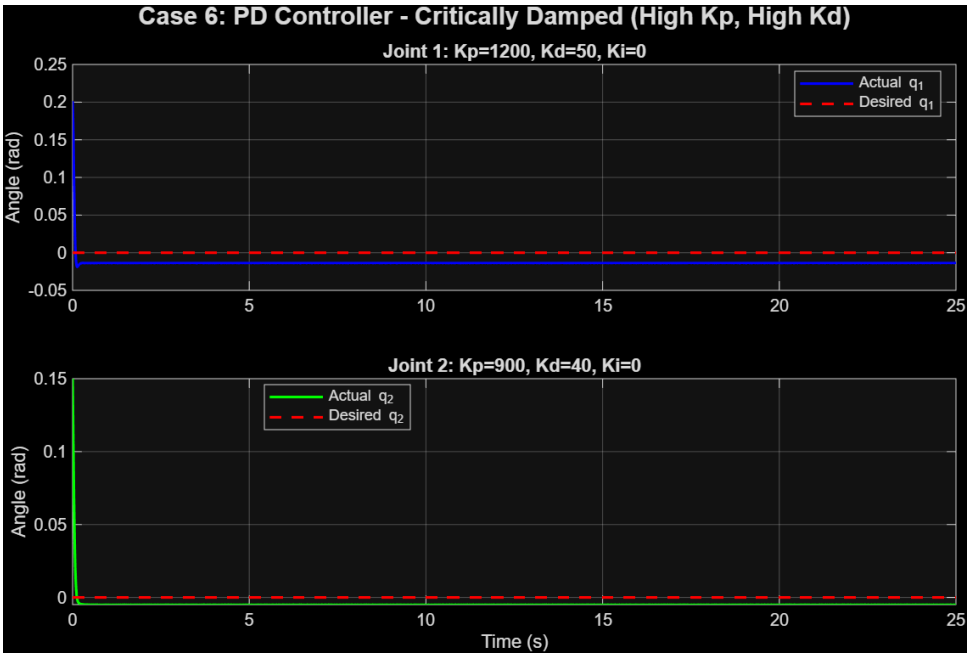

Figure 11: Joint angles $q_1(t)$ and $q_2(t)$ under PD control for High K_p,High k_d

9.3 Controller 3: Proportional and integral Control(PI control)

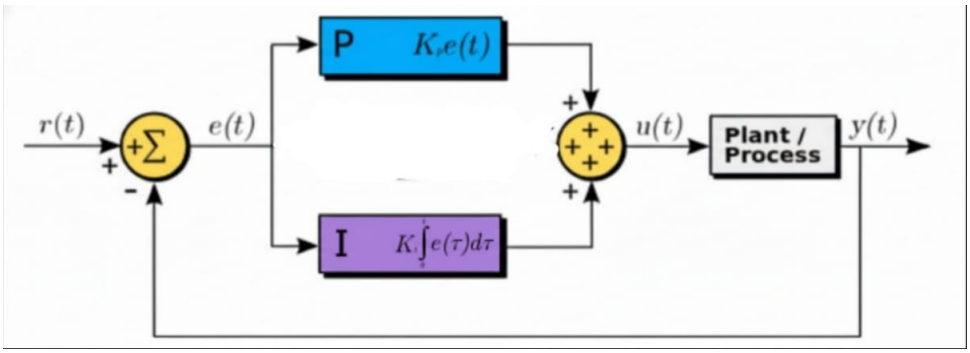

Figure 12: Block diagram for proportional and integral controller

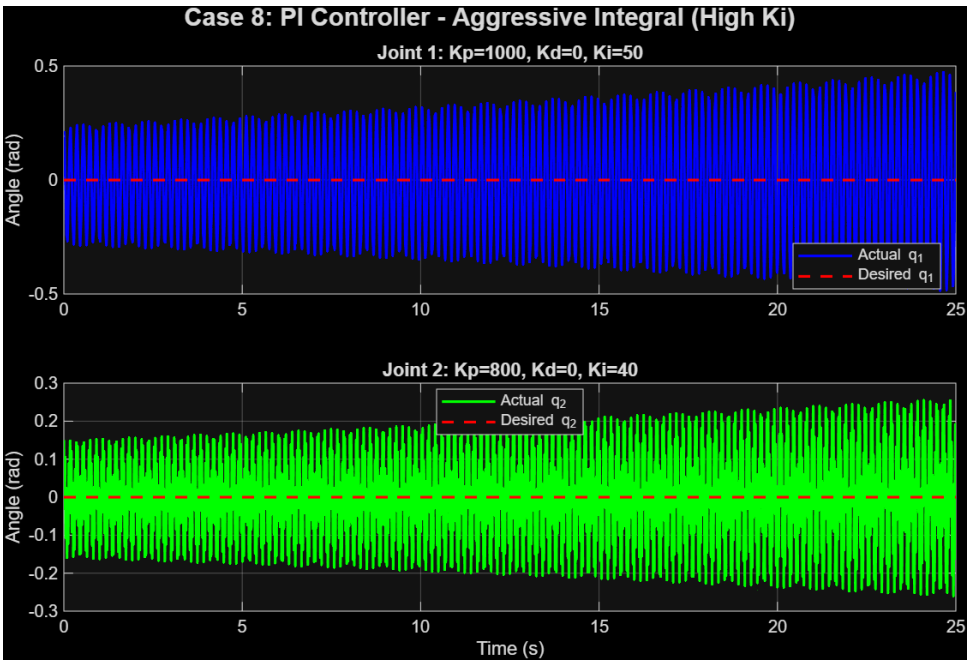

Figure 13: Joint angles $q_1(t)$ and $q_2(t)$ under PI control for high K_i

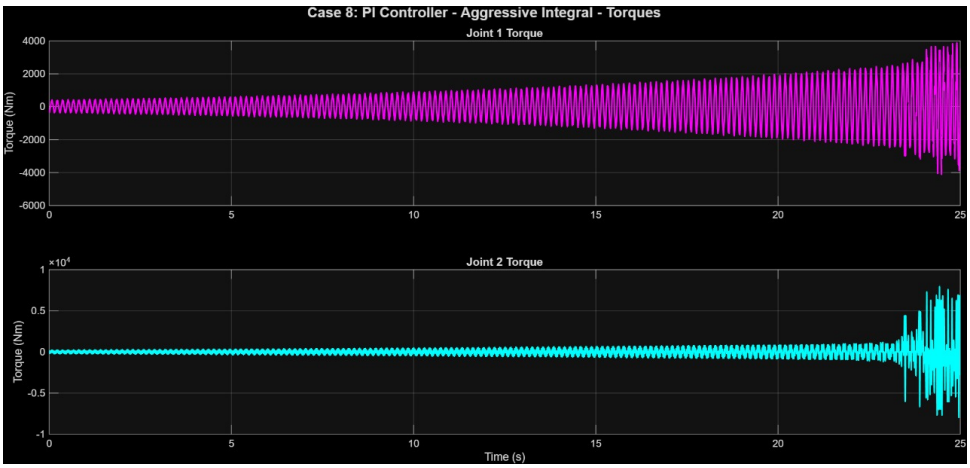

Figure 14: Control torques for $\tau_1(t)$ and $\tau_2(t)$ under PI control for high K_i

9.3.1 Performance Analysis

- By using Proportional–Integral (PI) control, the control input is generated by combining the proportional term, which amplifies the instantaneous error between the desired and actual responses, and the integral term, which accumulates the past error to eliminate steady-state error.
- The combined control signal is applied as the motor torque to each link of the 2-link manipulator.
- We observe that increasing the proportional gain improves the system's response speed but can introduce oscillations, while the integral gain helps to eliminate steady-state error but may increase overshoot and slow down the settling time if set too high.
- If we increase K_p too much, a phenomenon called *integral windup* occurs, due to which oscillations increase significantly and the system fails to reach steady state. This happens because of the large net summation of error accumulated by the integral term.
- We will below see the effect of increasing the integral control gain; we observe that its increase causes an increase in the overshoot and the settling time.
- Overall, PI control provides a balance between accuracy and stability in the responses $q_1(t)$ and $q_2(t)$.

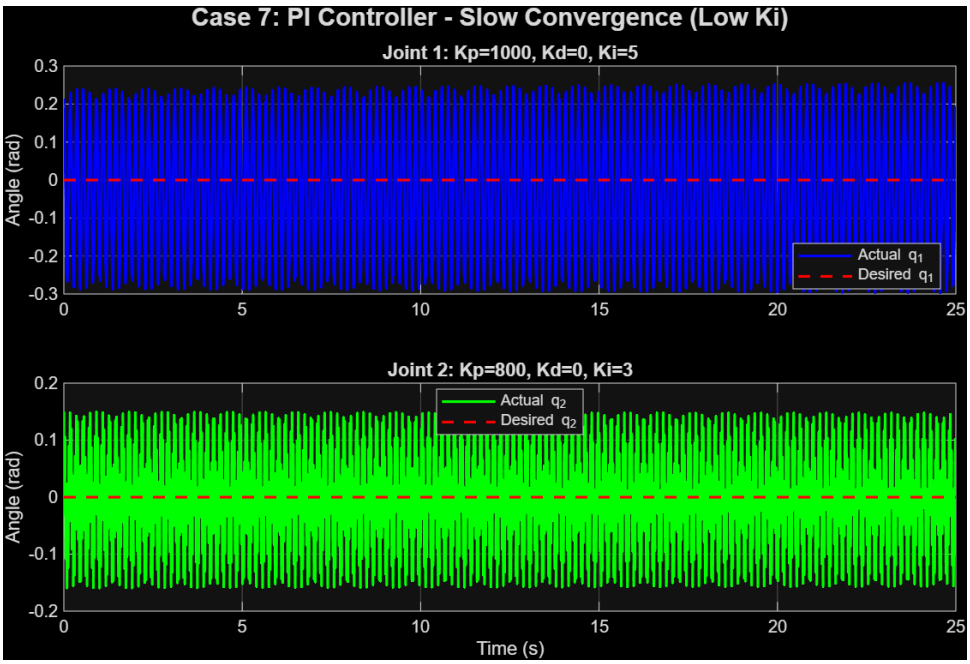

Figure 15: Joint angles $q_1(t)$ and $q_2(t)$ under PI control for low K_i

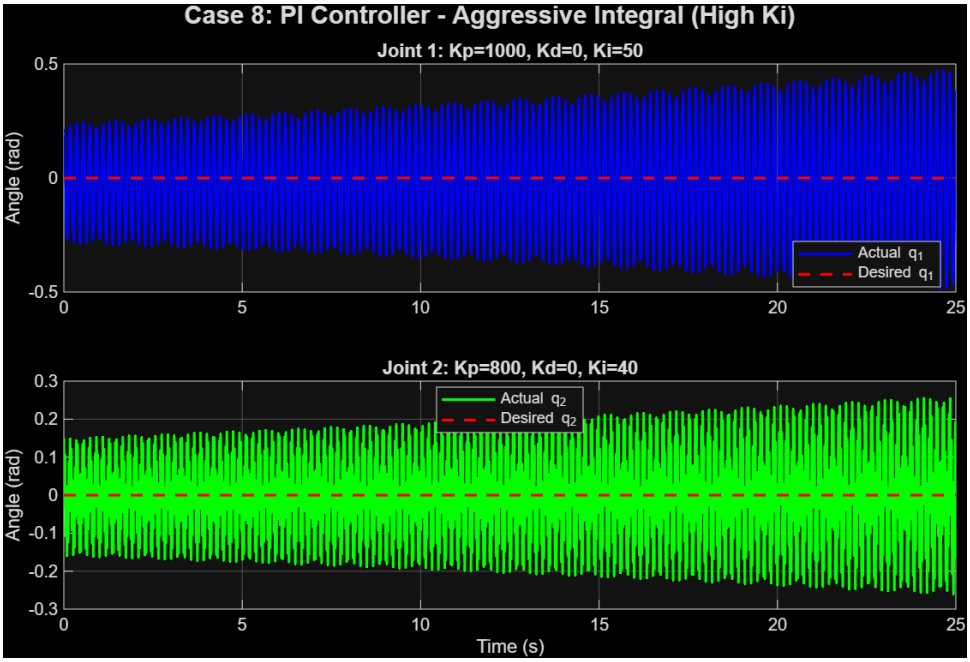

Figure 16: Joint angles $q_1(t)$ and $q_2(t)$ under PI control for high K_i

9.4 Controller 4: PID Control

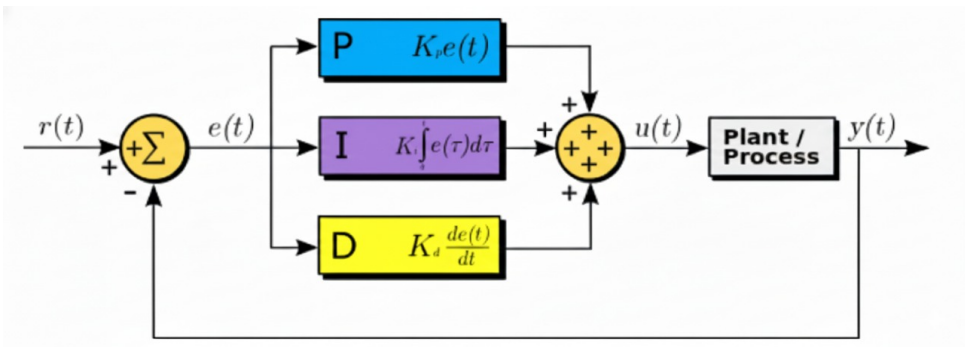

Figure 17: Block diagram for PID controller

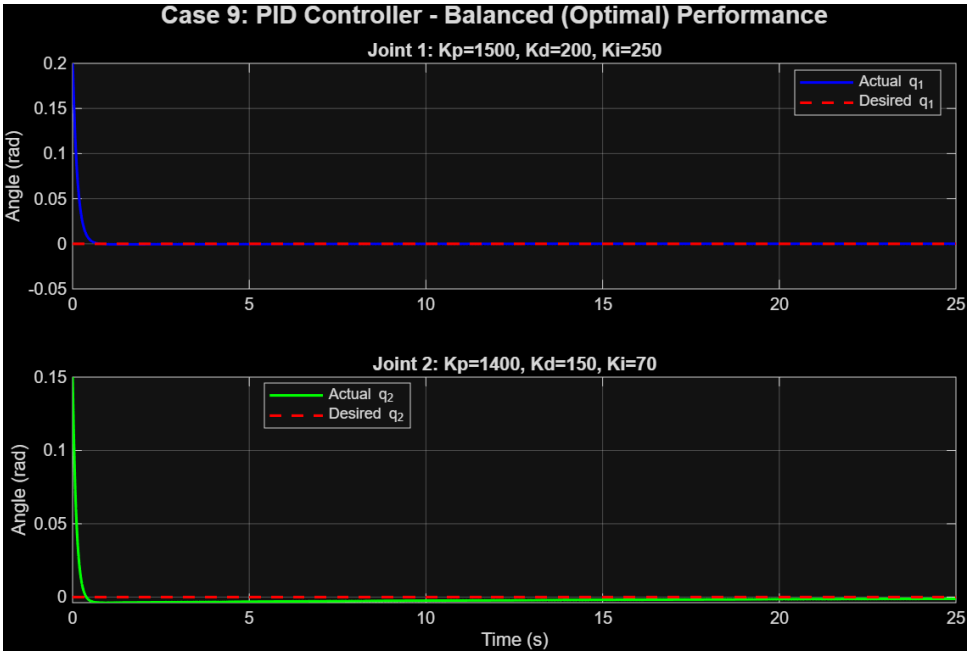

Figure 18: Joint angles $q_1(t)$ and $q_2(t)$ under PID Control in optimised condition

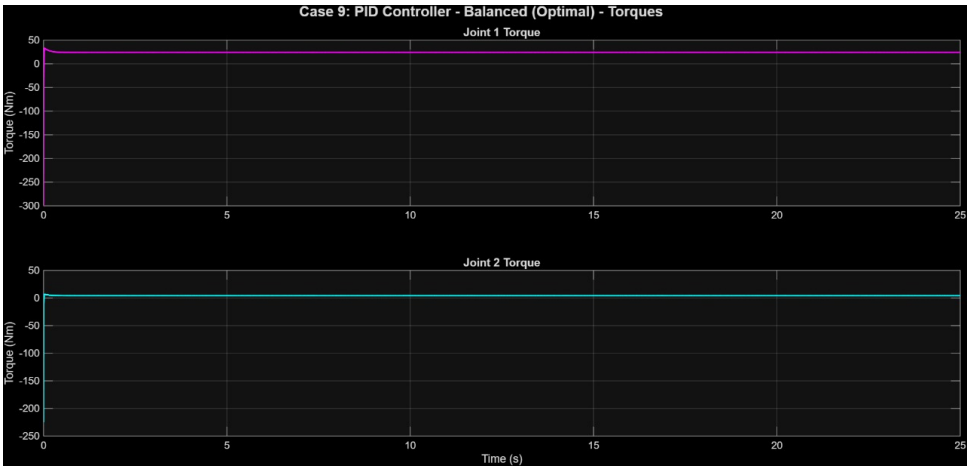

Figure 19: Control torques for $\tau_1(t)$ and $\tau_2(t)$ under PID Control in optimised condition

9.4.1 Performance Analysis

- By using Proportional–Integral–Derivative (PID) control, we generate the torques by combining three components: the proportional term, which amplifies the instantaneous error between the desired and actual responses; the integral term, which accounts for the accumulation of past errors to eliminate steady-state error; and the derivative term, which predicts the future trend of the error to provide damping and reduce oscillations.

- The resulting control signal is applied as the motor torque to each link of the 2-link manipulator.

- Increasing the proportional gain improves the system's response speed but may introduce oscillations and overshoot. The integral gain helps to reduce steady-state error but can further increase overshoot if set too high, while the derivative

gain provides damping, improving system stability and reducing overshoot in the responses $q_1(t)$ and $q_2(t)$.

- Therefore, properly adjusted values of the gains for each controller are necessary to achieve the expected or desired system behavior.
- When the controller gains are low, the system exhibits oscillations. However, with optimally tuned higher gain values, the system achieves a critically damped type of response, leading to stable and smooth performance.

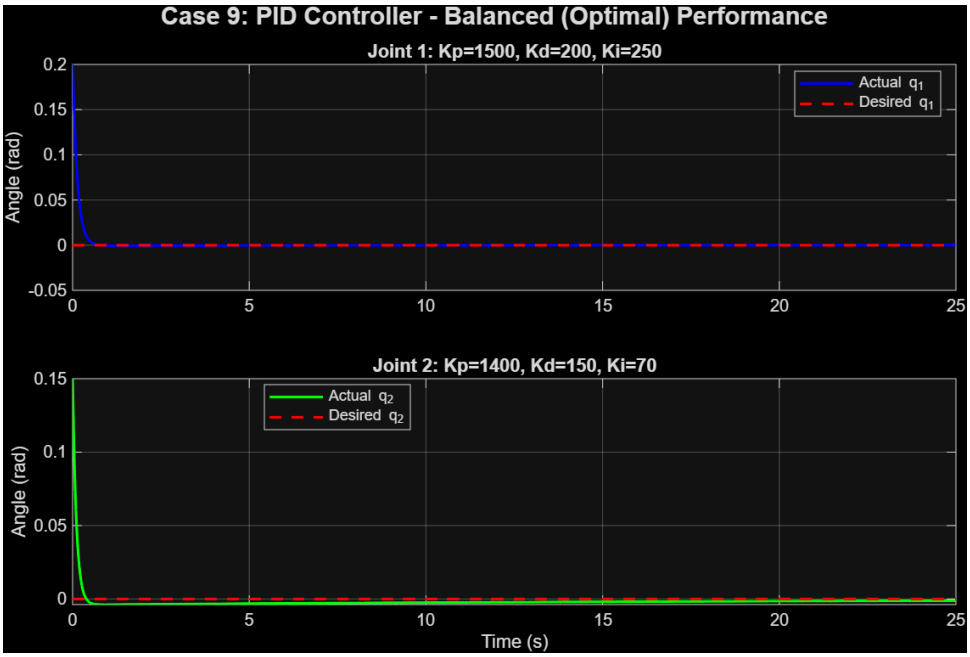

Figure 20: Joint angles $q_1(t)$ and $q_2(t)$ under PID Control in optimised condition

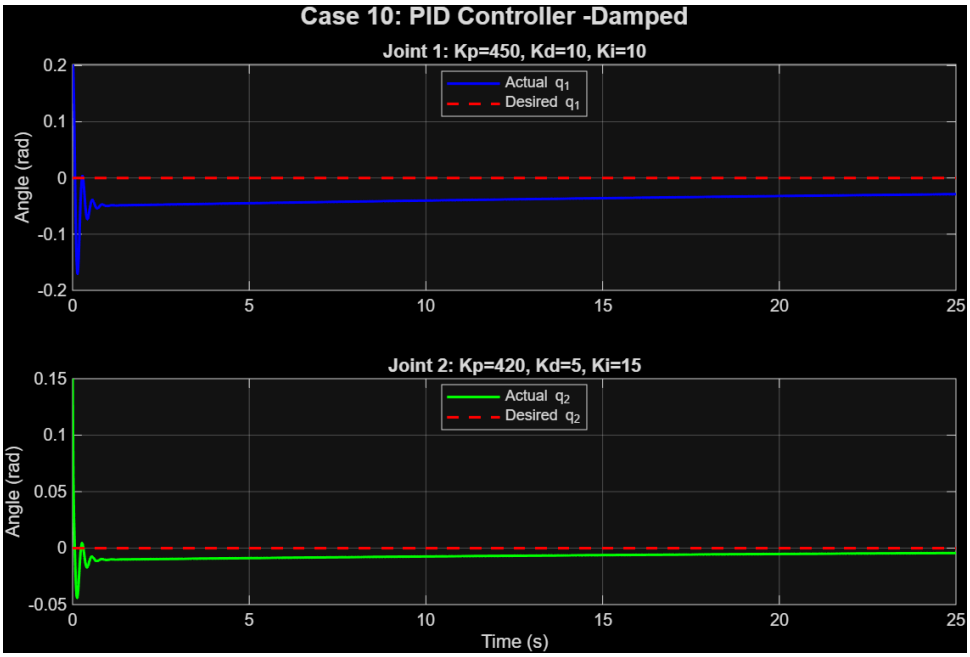

Figure 21: Joint angles $q_1(t)$ and $q_2(t)$ under PID Control in damped condition

10 Comparative Analysis

↑ Back to Contents

While conducting theoretical analysis we could have how much ever high values of the gains as we want, but realizing such high values in reality becomes a problem, below we will do a metric based analysis of different combination of controllers, with optimal gain values in each case, keeping them similar across different cases and decide finally which one to use.

10.1 Performance Metrics

Metric	**P**	**PD**	**PI**	**PID**
Settling Time (Joint 1) [s]	vl	0.507	vl	5.688
Settling Time (Joint 2) [s]	vl	0.516	vl	2.578
Overshoot (Joint 1) [%]	138.26	8.01	289.48	9.14
Overshoot (Joint 2) [%]	103.26	1.96	209.83	3.68
Steady-State Error (Joint 1) [rad]	0.023	0.016	0.023	0.004
Steady-State Error (Joint 2) [rad]	0.006	0.003	0.005	0.001
Max Torque (Joint 1) [Nm]	414.781	300	886.6	300
Max Torque (Joint 2) [Nm]	232.355	225	475.4	225

Table 2: Performance comparison of four controllers(vl=very large)

10.2 Discussion on Desired Performance

We could have different values of controller gains for link-1 and link-2 but generally thinking, the kind of behaviour we want is for the manipulator to not shake highly or vigorusly(less ocillations of the response and dampening of the response), fast movement of the manipulator(improved rise and settling time), the manipulator to reach the final desired position(reduced stady state error), these can be achieved with same control values of both the links also we are anyway applying independent torques on the links.

10.3 Conclusion on Controller Gains

We have determined above that the best controller is the PID, and now we will decide on the values of the controller gains.

First, we take some random values of gains; let them be:

$$K_{p1} = K_{p2} = K_p, \quad K_{d1} = K_{d2} = K_d, \quad K_{i1} = K_{i2} = K_i$$

$$K_p = 20, \quad K_i = 5, \quad K_d = 2$$

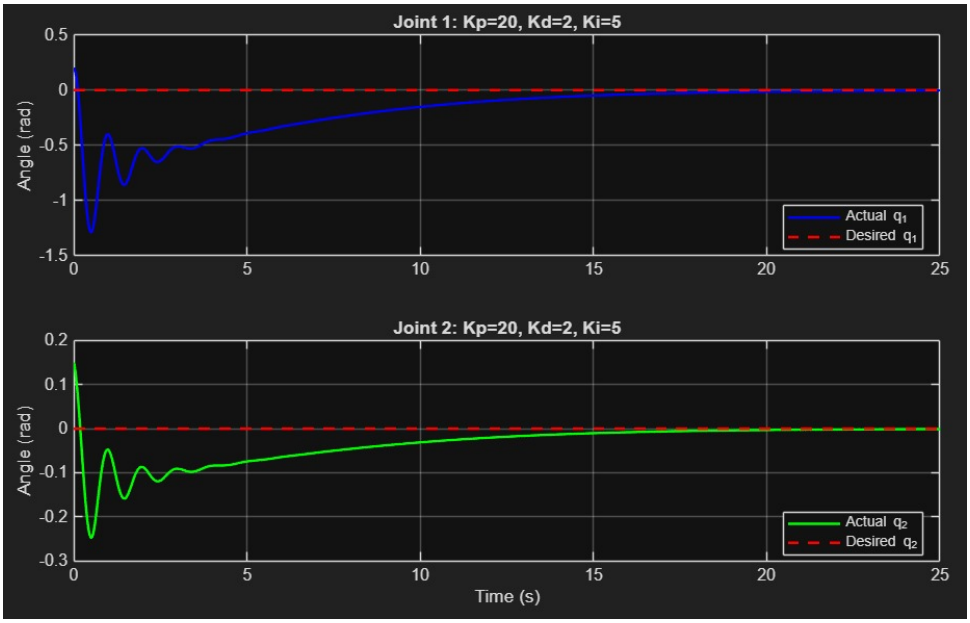

Figure 22: Joint angles $q_1(t)$ and $q_2(t)$ under PID Control with $K_p = 20$, $K_i = 5$, $K_d = 2$

We notice here that the settling time is large (around 20 s). Hence, we increase K_p to 1500.

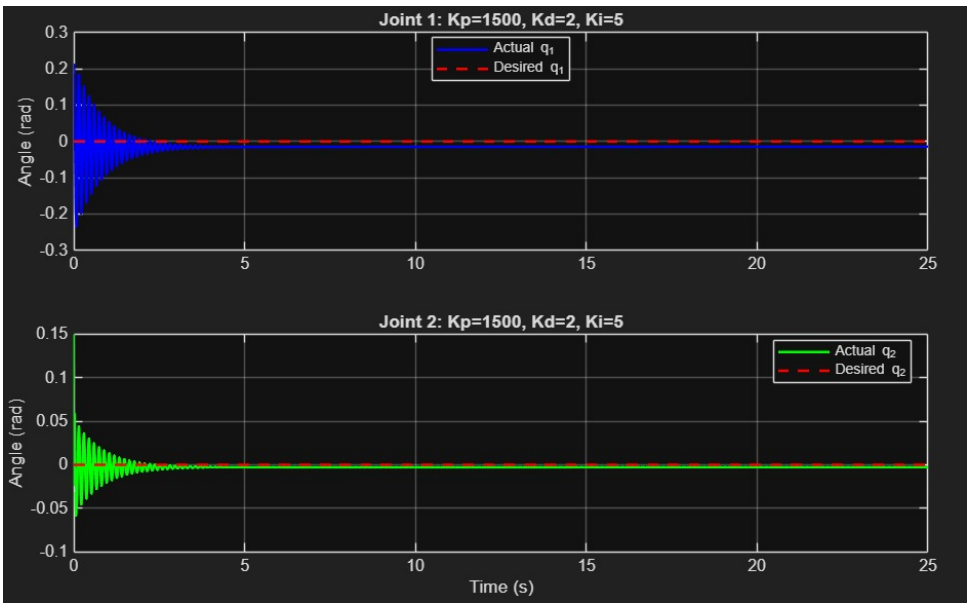

Figure 23: Joint angles $q_1(t)$ and $q_2(t)$ under PID Control with $K_p = 1500$, $K_i = 5$, $K_d = 2$

We notice that the settling time now decreased (around 5 s), but the oscillations increased a lot, so let's increase K_d to 200.

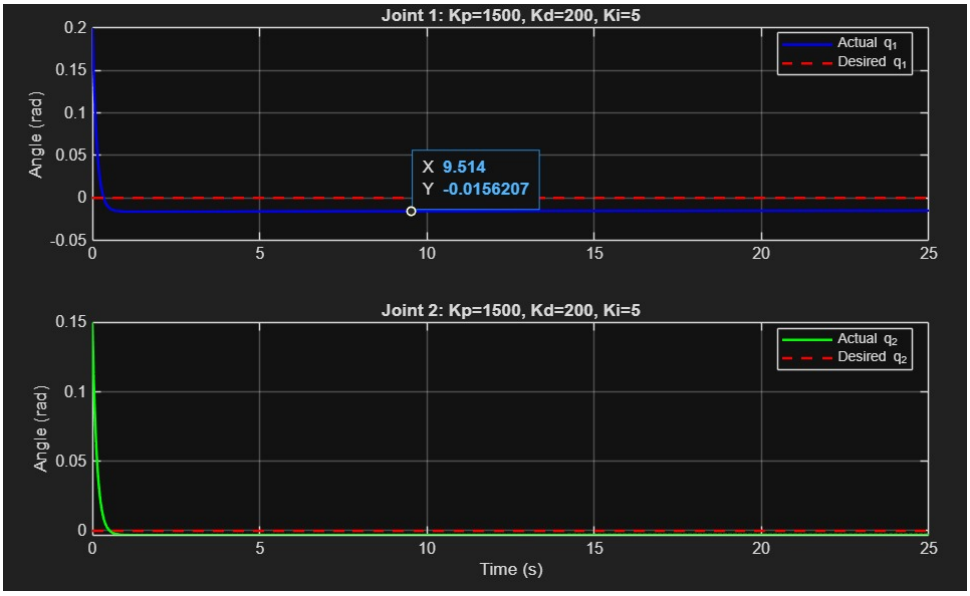

Figure 24: Joint angles $q_1(t)$ and $q_2(t)$ under PID Control with $K_p = 1500$, $K_i = 5$, $K_d = 200$

The oscillations have decreased, but there is still a lot of steady-state error, so let's increase $K_i = 250$.

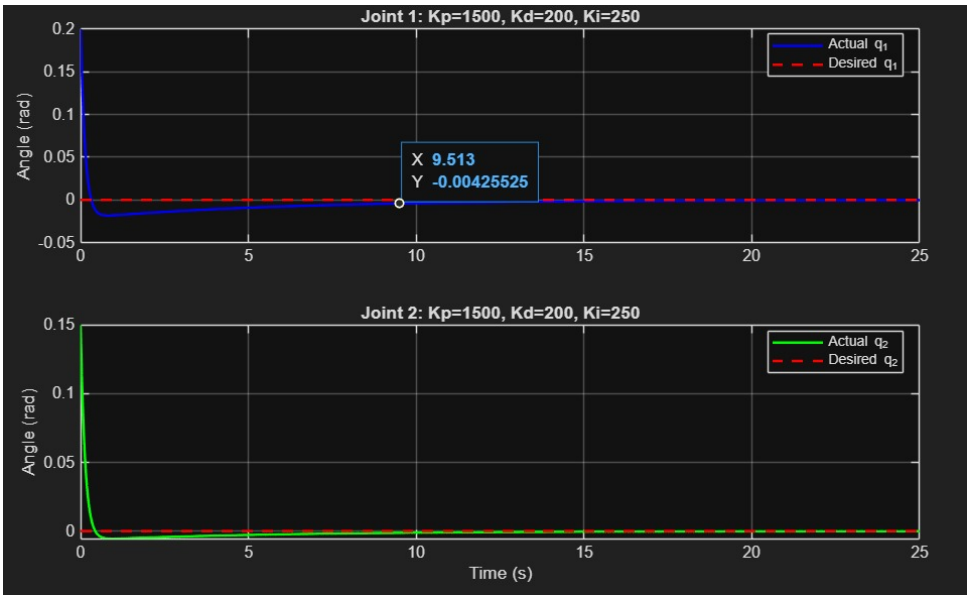

Figure 25: Joint angles $q_1(t)$ and $q_2(t)$ under PID Control with $K_p = 1500$, $K_i = 250$, $K_d = 200$

While changing gains, we must be aware of integral overflow and all the other performance parameters, and assign our gains according to other implementation constraints, etc.

11 MATLAB Code

↑ Back to Contents

11.1 Manipulator Response Function

```
function state_equ = state_equ_vector(t, state_vector, K1, K2,
   q_final, state_initial)

    %state vector
    q1 = state_vector(1);
    q2 = state_vector(2);
    q1_dot = state_vector(3);
    q2_dot = state_vector(4);
    int_e1 = state_vector(5);
    int_e2 = state_vector(6);

    q_dot = [q1_dot; q2_dot];

    %Controller Gains
    Kp1 = K1(1);
    Kd1 = K1(2);
    Ki1 = K1(3);
    Kp2 = K2(1);
    Kd2 = K2(2);
    Ki2 = K2(3);

    e1 = q_final(1) - q1;
    e2 = q_final(2) - q2;
    e1_dot = -q1_dot;
    e2_dot = -q2_dot;
    tau1 = Kp1*e1 + Kd1*e1_dot + Ki1*int_e1;
    tau2 = Kp2*e2 + Kd2*e2_dot + Ki2*int_e2;
    TAU = [tau1; tau2];
    m1 = 5;
    m2 = 3;
    l1 = 0.25;
    l2 = 0.15;
    g = 9.81;

    % Inertia Matrix
    M11 = (m1 + m2)(l1^2) + m2*l2(l2 + 2*l1*cos(q2));
    M12 = m2*l2*(l2 + l1*cos(q2));
    M21 = m2*l2*(l2 + l1*cos(q2));
    M22 = m2*l2*l2;
    M = [M11, M12; M21, M22];

    % Coriolis Matrix
    C11 = -m2*l1*l2*sin(q2)*q2_dot;
    C12 = -m2*l1*l2*sin(q2)*(q2_dot + q1_dot);
    C21 = 0;
    C22 = m2*l1*l2*sin(q2)*q1_dot;
    C = [C11, C12; C21, C22];

    % Gravity Vector
```

```
    G = [m1*l1*g*cos(q1) + m2*g*(l2*cos(q1 + q2) + l1*cos(q1));
         m2*g*l2*cos(q1 + q2)];

    q_dotdot = (M ^(-1))*(TAU - C*q_dot - G);
    state_equ = [q_dot; q_dotdot; e1; e2];

end
```

Listing 1: MATLAB function for computing system dynamics

11.2 Main Simulation Script

```
clear;clc;close all;

%simulation time
t_simu = 0:0.001:25;
%initial state vector
state_initial = [0.2; 0.15; 0; 0; 0; 0];
%desired state vector
q_final = [0; 0];
K1 = [50, 0, 0];%sample values
K2 = [30, 0, 0];%sample values

[t_plot, state] = ode45(@(t,y) state_equ_vector(t,y, K1, K2,
    q_final,state_initial), t_simu, state_initial);

figure();

% Plot for Joint 1
subplot(2, 1, 1);
plot(t_plot, state(:,1));%indicates q1
plot([0 25], [q_final(1) q_final(1)]);%indicates desired q1
ylabel('Angle (rad)');legend('Actual q_1', 'Desired q_1', '
    Location', 'best');

% Plot for Joint 2
subplot(2, 1, 2);
plot(t_plot, state(:,2));%indicates q2
plot([0 25], [q_final(2) q_final(2)]);%indicates desired q2
xlabel('Time (s)'); ylabel('Angle (rad)');legend('Actual q_2', '
    Desired q_2', 'Location', 'best');
```

Listing 2: Main simulation script structure

12 Simulink

↑ Back to Contents

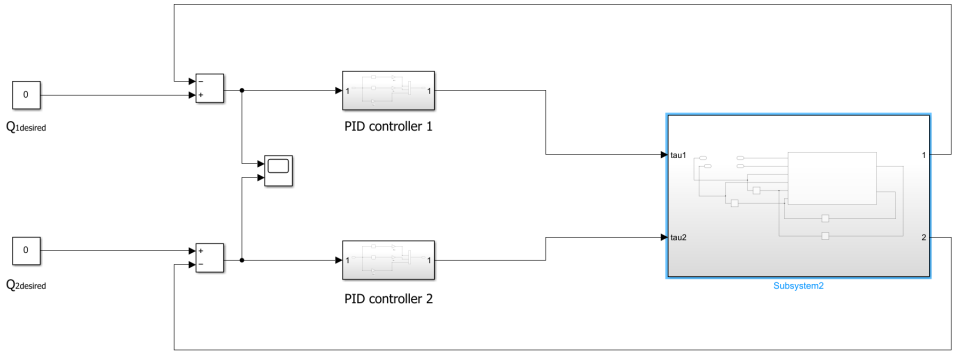

Figure 26: Complete Block diagram

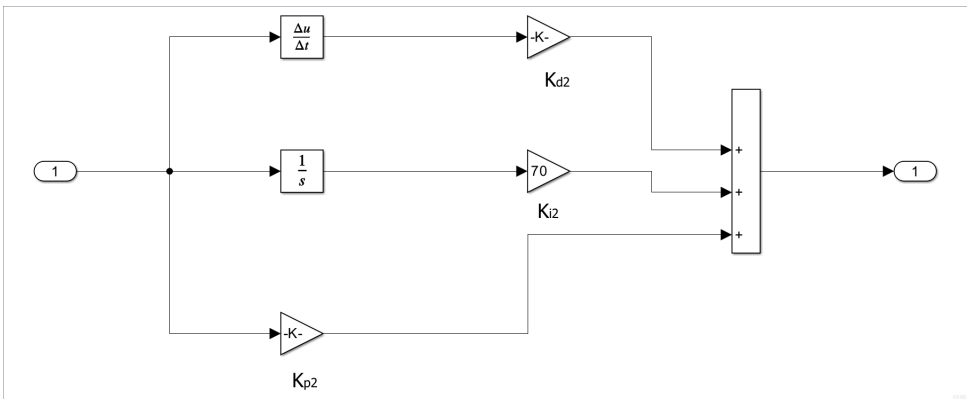

Figure 27: Block diagram of PID Controller

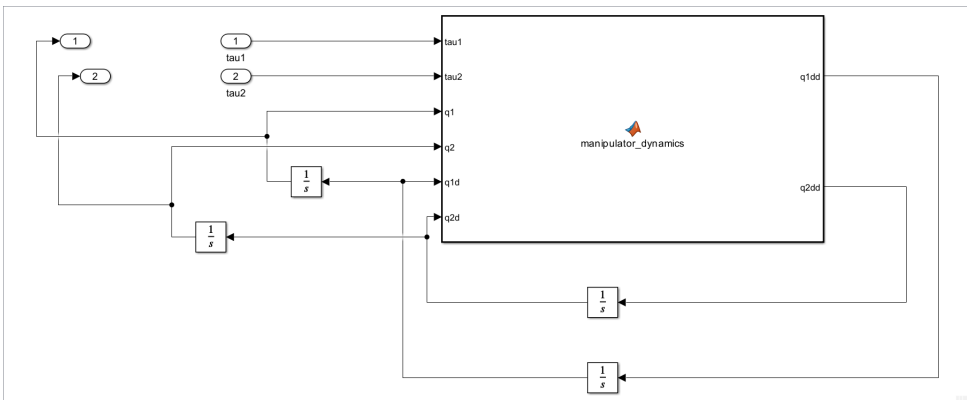

Figure 28: Subsystem of the physical 2-link manipulator

12.1 Plots

In all plots below:

- The curve yellow represents the error for joint 1.
- The blue curve represents the error for joint 2.

12.1.1 Controller 1: Proportional Control

For joint 1:

$$K_p = 50, \quad K_d = 0, \quad K_i = 0$$

For joint 2:

$$K_p = 30, \quad K_d = 0, \quad K_i = 0$$

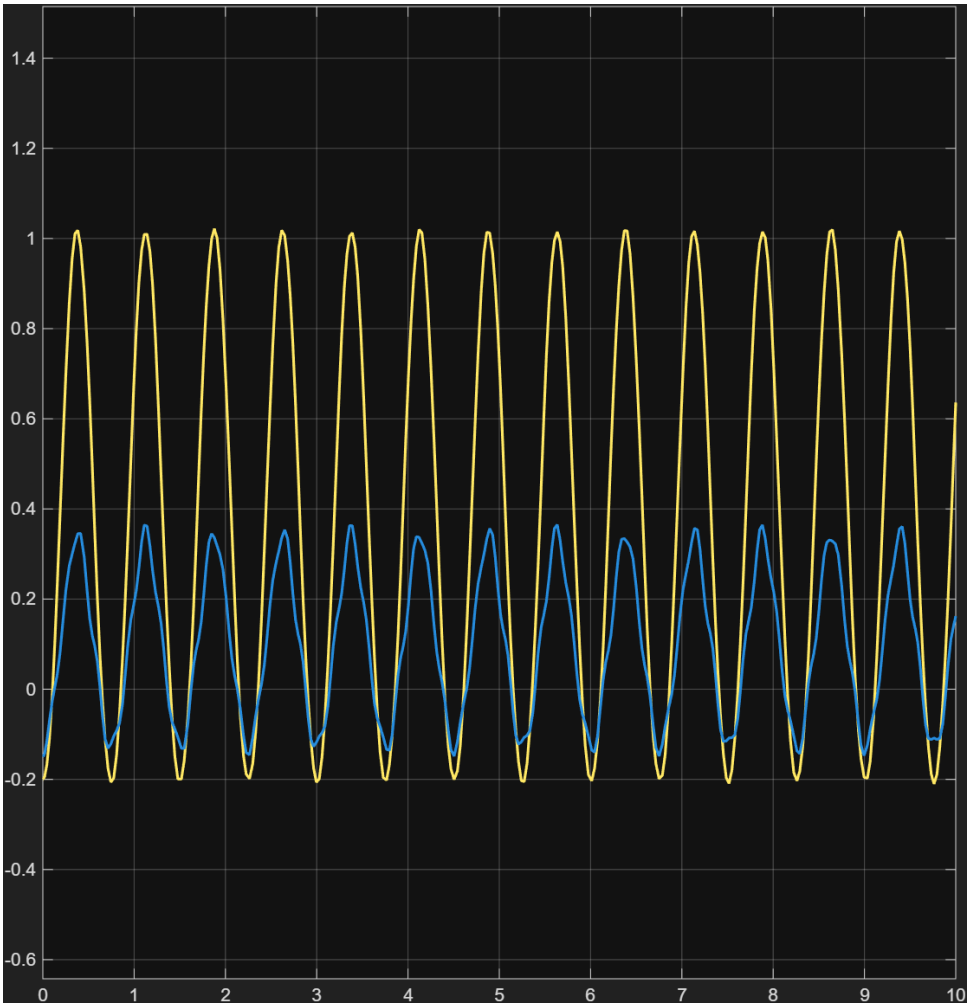

Figure 29: error plots for joint 1 and 2 under Proportional control for low K_p

For joint 1:

$$K_p = 1000, \quad K_d = 0, \quad K_i = 0$$

For joint 2:

$$K_p = 800, \quad K_d = 0, \quad K_i = 0$$

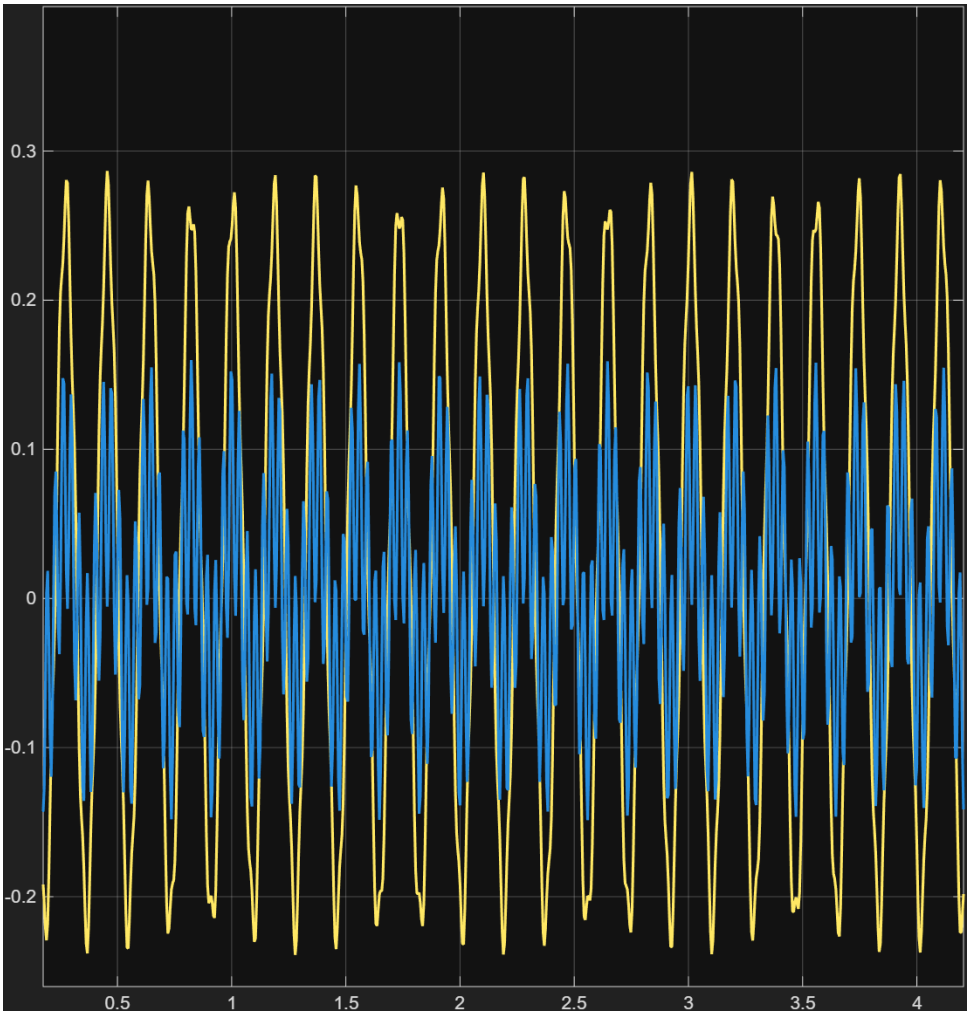

Figure 30: error plots for joint 1 and 2 under Proportional control for high K_p

12.1.2 Controller 2: Proportional and derivative Control(PD control)

For joint 1:

$$K_p = 600, \quad K_d = 10, \quad K_i = 0$$

For joint 2:

$$K_p = 500, \quad K_d = 8, \quad K_i = 0$$

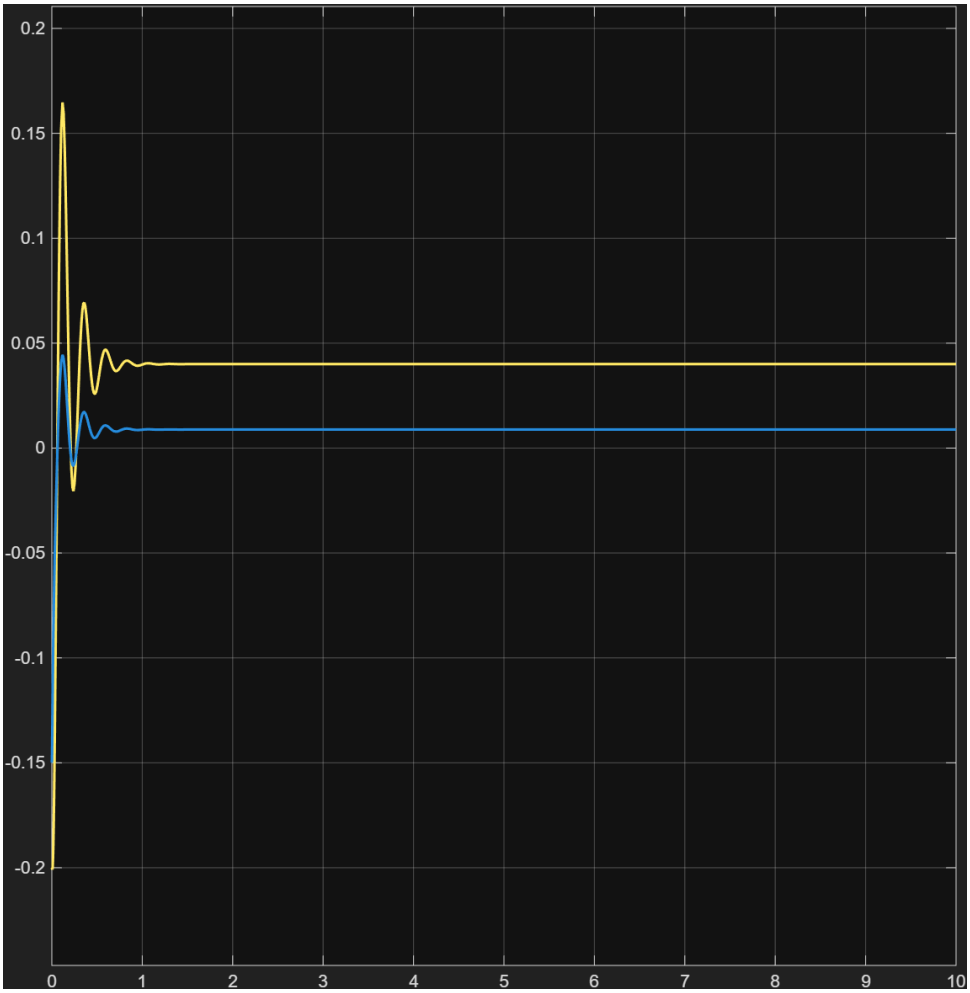

Figure 31: Joint angles $q_1(t)$ and $q_2(t)$ under PD control of Moderate K_p,Low K_d

For joint 1:

$$K_p = 12000, \quad K_d = 50, \quad K_i = 0$$

For joint 2:

$$K_p = 900, \quad K_d = 40, \quad K_i = 0$$

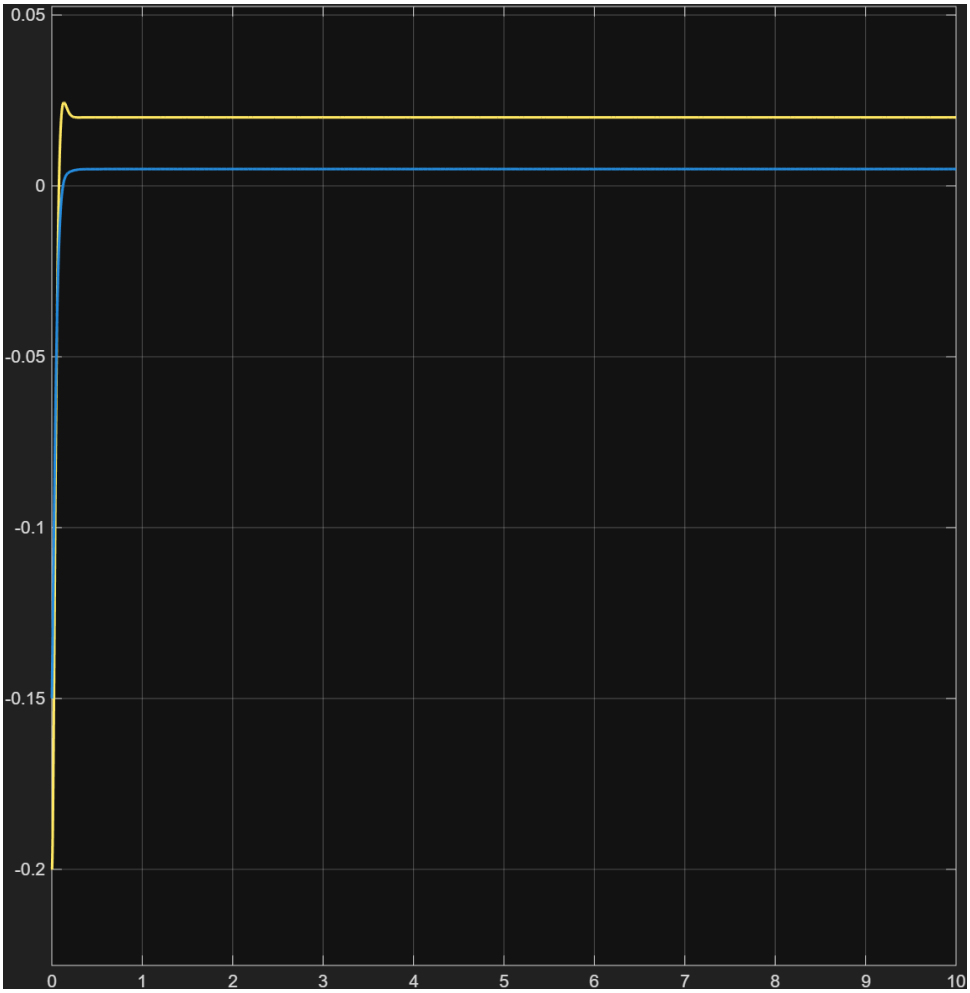

Figure 32: Joint angles $q_1(t)$ and $q_2(t)$ under PD control of High K_p,High k_d

12.1.3 Controller 3: Proportional and integral Control(PI control)

For joint 1:

$$K_p = 1000, \quad K_d = 0, \quad K_i = 5$$

For joint 2:

$$K_p = 800, \quad K_d = 0, \quad K_i = 3$$

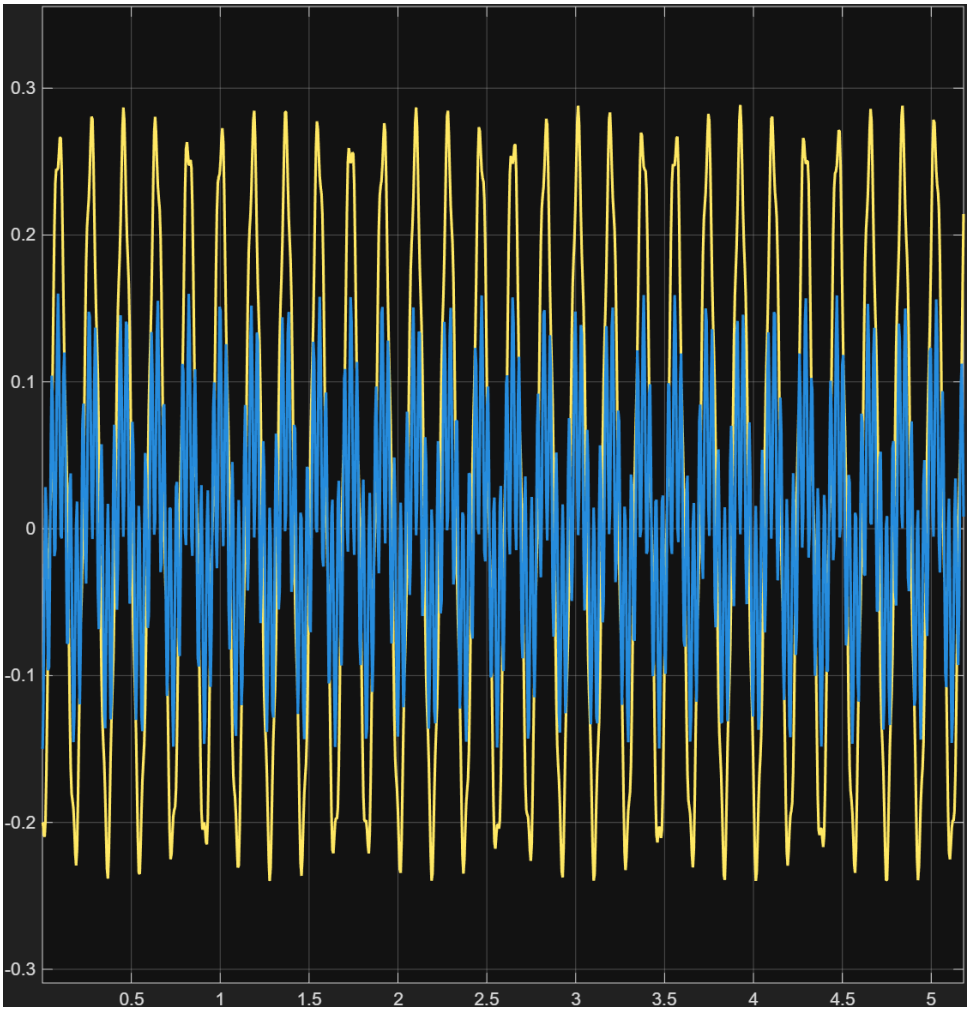

Figure 33: error plots for Joint 1 and 2 under PI control with low K_i

For joint 1:

$$K_p = 1000, \quad K_d = 0, \quad K_i = 50$$

For joint 2:

$$K_p = 800, \quad K_d = 0, \quad K_i = 40$$

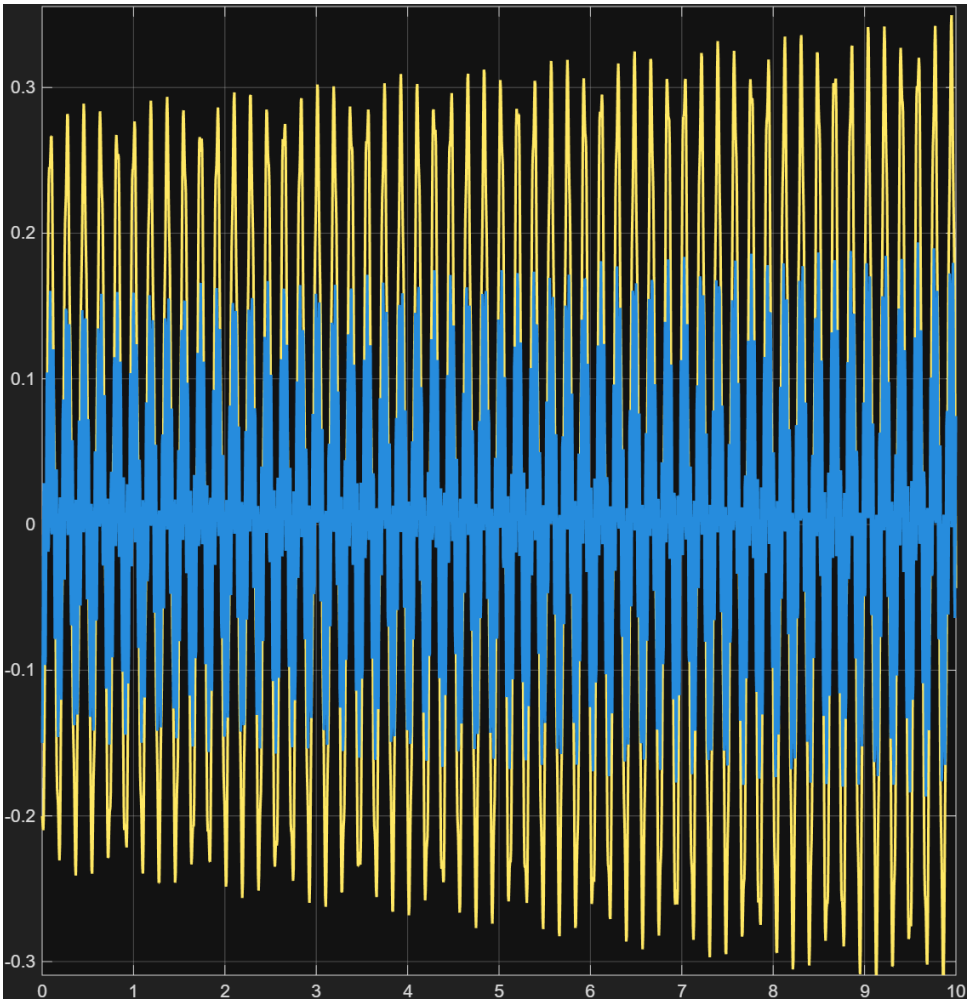

Figure 34: error plots for Joint 1 and 2 under PI control with high K_i

12.1.4 Controller 4: PID Control

For joint 1:

$$K_p = 1500, \quad K_d = 200, \quad K_i = 250$$

For joint 2:

$$K_p = 1400, \quad K_d = 150, \quad K_i = 70$$

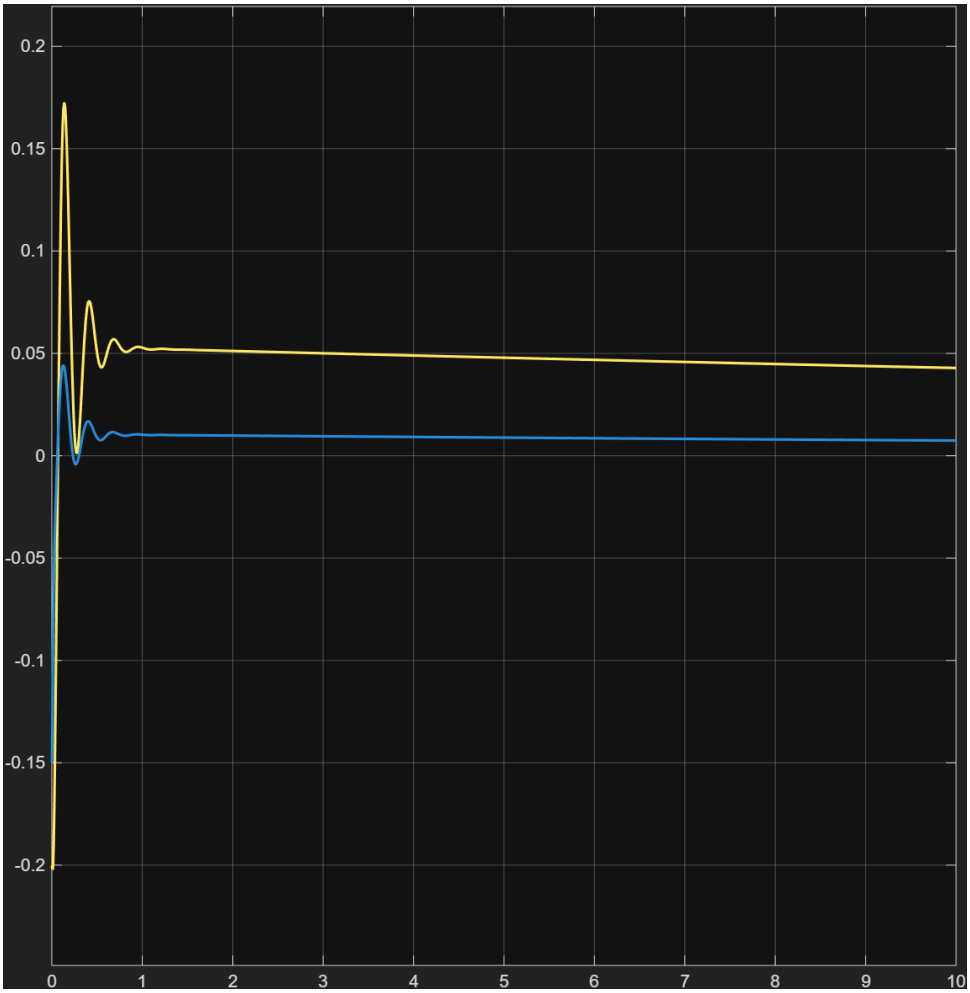

Figure 35: error plots for joint 1 and 2 under PID Control in optimised condition

For joint 1:

$$K_p = 450, \quad K_d = 10, \quad K_i = 10$$

For joint 2:

$$K_p = 420, \quad K_d = 5, \quad K_i = 15$$

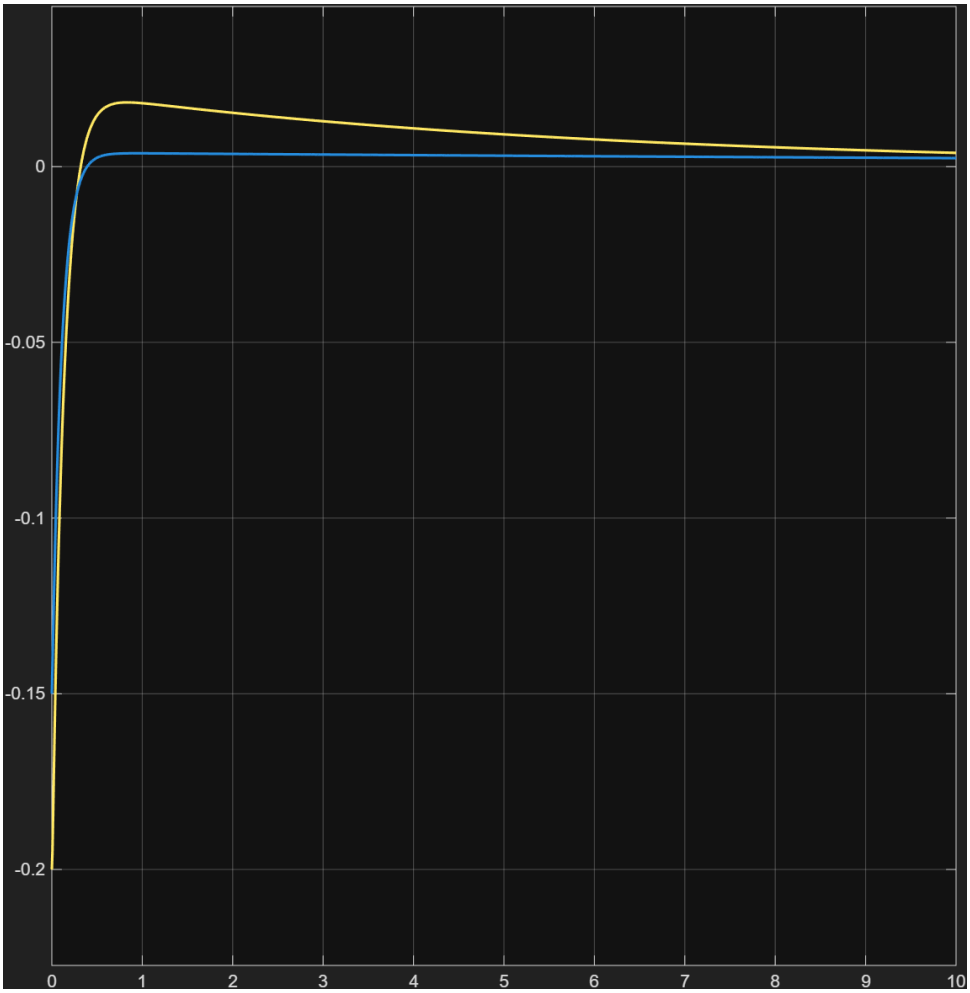

Figure 36: error plots for joint 1 and 2 under PID Control in damped condition

12.2 MATLAB CODE

```
function [q1dd, q2dd] = manipulator_dynamics(tau1, tau2, q1, q2,
    q1d, q2d)


    % Inputs:
    %   tau1, tau2: Joint torques for link 1 and link 2
    %   q1, q2:     Joint angles for link 1 and link 2
    %   q1d, q2d:   Joint velocities for link 1 and link 2
    %
    % Outputs:
    %   q1dd, q2dd: Joint accelerations for link 1 and link 2


    persistent m1 m2 l1 l2 g;
    if isempty(m1)
        m1 = 5;      % kg
        m2 = 3;      % kg
        l1 = 0.25;   % m
        l2 = 0.15;   % m
```

```
        g = 9.81;    % m/s^2
    end

    tau = [tau1; tau2];
    q_d = [q1d; q2d];

    % Inertia Matrix M(q)
    M11 = (m1 + m2)*l1^2 + m2*l2^2 + 2*m2*l1*l2*cos(q2);
    M12 = m2*l2^2 + m2*l1*l2*cos(q2);
    M21 = M12;
    M22 = m2*l2^2;
    M = [M11, M12; M21, M22];

    % Coriolis and Centrifugal Matrix C(q, q_d)
    h = -m2*l1*l2*sin(q2);
    C11 = h * q2d;
    C12 = h * (q1d + q2d);
    C21 = -h * q1d;
    C22 = 0;
    C = [C11, C12; C21, C22];

    % Gravity Vector G(q)
    G1 = (m1+m2)*g*l1*cos(q1) + m2*g*l2*cos(q1+q2);
    G2 = m2*g*l2*cos(q1+q2);
    G = [G1; G2];

    % Solve for Joint Accelerations
    q_dd = M \ (tau - C*q_d - G);

    q1dd = q_dd(1);
    q2dd = q_dd(2);
end
```

Listing 3: MATLAB function for 2-Link Planar Manipulator Forward Dynamics

13 Conclusion

We conclude this project now, we have evaluated the pro's and con's, advantages and disadvantages of P,PI,PD and PID controllers, we have evaluated on the basis of effects introduced into the response by independent controller gains, and the winner came out to be PID, it provides us with a lot of control, our final gain values should decrease the oscillations, provide lesser settling time and the least steady state error thereby causing the 2-link manipulator to not oscillate, reach the target object faster, and reach the target accurately

Upon analysing PID controller with varying controller gains we reached one of the suitable values for expected or desired behaviour $K_p = 1500$,$K_d = 200$,$K_i = 250$

Table 3: Effects of Increasing Individual Controller Gains

Gain	**Advantages of Increase**	**Disadvantages of Increase**
K_p (Proportional)	• Faster response time • Reduces steady-state error • Immediate corrective action	• Increases overshoot • Can cause instability • Does not eliminate steady-state error completely
K_i (Integral)	• Eliminates steady-state error • Improves long-term accuracy • Compensates for disturbances	• Slower response • Increases overshoot • Can cause integral windup if increased too much
K_d (Derivative)	• Reduces overshoot • Improves stability • Provides damping • Anticipates future error	• Can slow down response • Does not eliminate steady-state error completely

Table 4: Controller Types: Evolution and Benefits

Controller Type	**Key Differences from Previous**	**Benefits of Advancement**
P Controller	• Baseline controller • Output proportional to error • $\tau(t) = K_p \cdot e(t)$	• Simple and fast • Easy to implement • Good for first-order systems • Low computational cost
PD Controller	• Adds derivative term • Predicts future error trend • $\tau(t) = K_p \cdot e(t) + K_d \cdot \frac{de(t)}{dt}$	• Reduced overshoot vs P • Better stability • Improved transient response • Faster settling time
PI Controller	• Adds integral term to P • Accumulates past errors • $\tau(t) = K_p \cdot e(t) + K_i \int e(t)dt$	• Eliminates steady-state error • Improved accuracy(steady state error) vs P
PID Controller	• Combines all three terms • Full equation: $\tau(t) = K_p \cdot e(t) + K_i \int e(t)dt + K_d \cdot \frac{de(t)}{dt}$	• Best overall performance • Very less steady-state error • Minimal overshoot • Fast response with stability • Most versatile controller

14 Contributions

14.1 latex

- section 1 to 7 : Yaswanth,Kowshikh,Sangameshwar.
- section 8 and 11 : Rithik,Nischal.
- section 9 and 10 : Rithik,Akshay,Nischal.
- section 12 : Rithik,Kowshikh,Yaswanth.
- section 13 : Akshay,Sangameshwar.

14.2 Matlab Code

- Nischal,Yaswanth,Kowshikh.

14.3 Simulink Code

- Sangameshwar,Akshay,Rithik.

14.4 Video

- Nischal,Akshay.