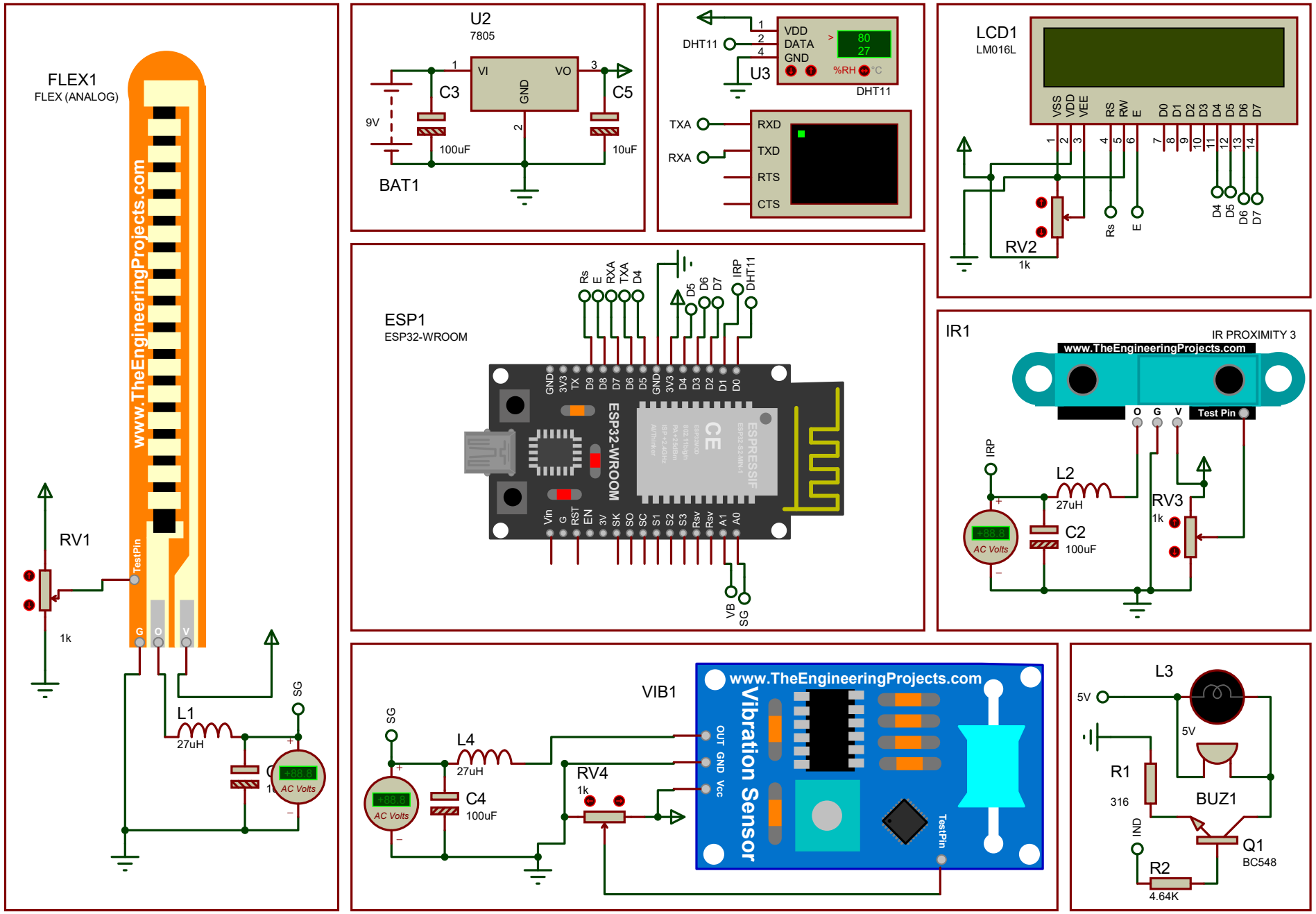
FLEX1
FLEX (ANALOG)
www.TheEngineeringProjects.com
TestPin
G
O
V
RV1
1k
L1
27uH
SG
AC Volts
U2
7805
VI
VO
GND
C3
C5
9V
100uF
10uF
BAT1
DHT11
VDD
DATA
GND
U3
80
27
%RH
°C
DHT11
TXA
RXA
RXD
TXD
RTS
CTS
LCD1
LM016L
VSS
VDD
VEE
RS
RW
E
D0
D1
D2
D3
D4
D5
D6
D7
RV2
1k
Rs
E
ESP1
ESP32-WROOM
Rs
E
RXA
TXA
D4
D5
D6
D7
IRP
DHT11
GND
3V3
TX
D9
D8
D7
D6
D5
GND
3V3
D4
D3
D2
D1
D0
ESP32-WROOM
ESPRESSIF
Vin
G
RST
EN
3V
SK
SO
SC
S1
S2
S3
Rsv
Rsv
A1
A0
VB
SG
IR1
IR PROXIMITY 3
www.TheEngineeringProjects.com
O
G
V
Test Pin
IRP
L2
27uH
C2
100uF
RV3
1k
AC Volts
VIB1
www.TheEngineeringProjects.com
Vibration Sensor
OUT
GND
Vcc
TestPin
SG
L4
27uH
C4
100uF
RV4
1k
AC Volts
L3
5V
5V
R1
316
BUZ1
IND
Q1
BC548
R2
4.64K