!!!!!!WELCOME !!!!!!!

BY: Arjun
Thapa

Reg.No:-
2021-1-53-0376

Thank’s To

Er. Nishan Khanal
(HOD)

Presentation Topics

- Arrays and Strings (C programming) .
- MOSFET(FEE)
- Biodata (BTC)

Arrays

- A collection of data items, all of the same type, stored contiguously in memory.
- Each element referenced by an index (subscript).
- Index? - Is a integer value indicate the position of elements in the Array.
- Used to store multiple values in a single variable.

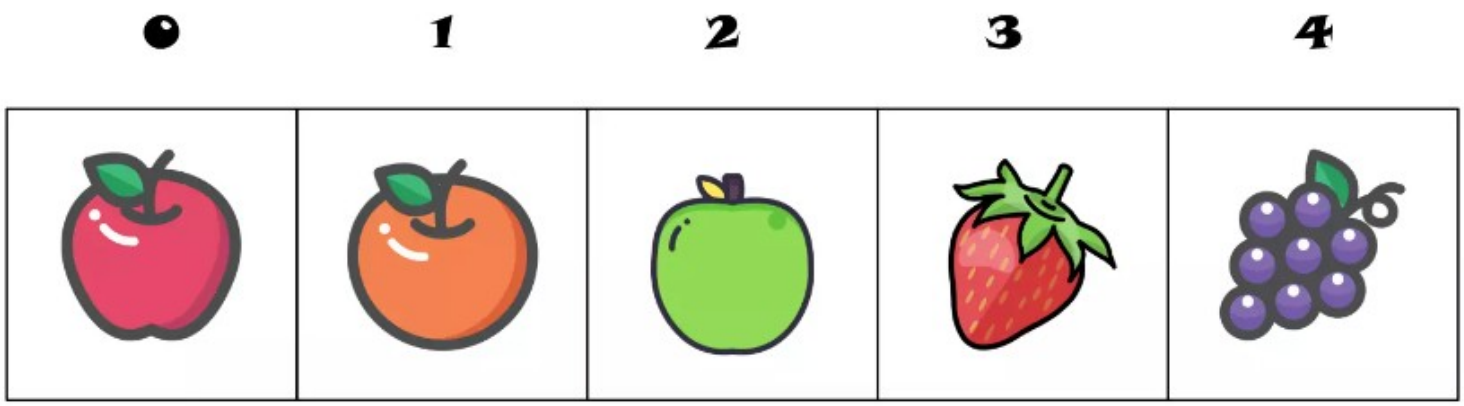

www.TestingDocs.com

An Array of Fruits : fruits
fruits[4]="Grapes"
fruit = fruits[0]

fruit variable holds "Apple"

Array Declaration ?

- can be declared by specifying the type of data it will store and the number of elements it will hold.
- For example, an array of 10 integers can be declared as int myArray[10];
- For an Array of size 10, valid range subscript is from 0 to 4.
- for an array of size n, the valid range of subscript range is from o to n-1.

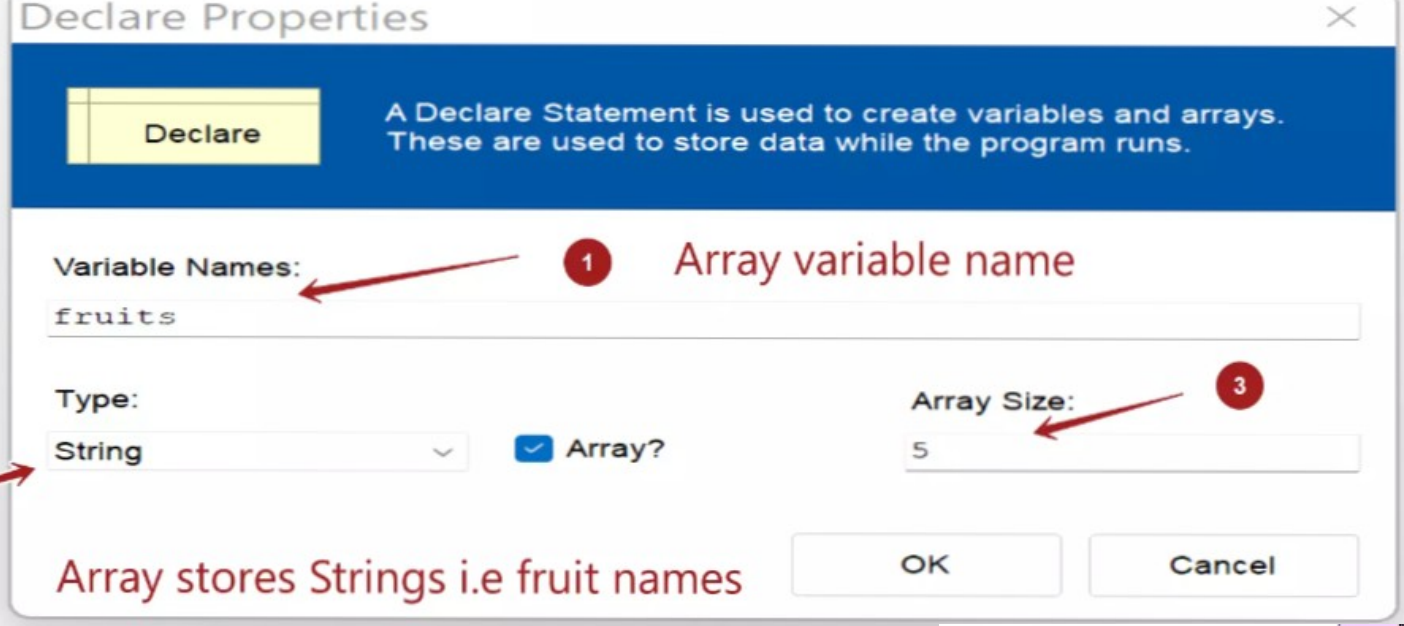
Declare Properties
Declare
A Declare Statement is used to create variables and arrays.
These are used to store data while the program runs.
Variable Names:
1
Array variable name
fruits
Type:
Array Size:
3
String
Array?
5
2
Array stores Strings i.e fruit names
OK
Cancel

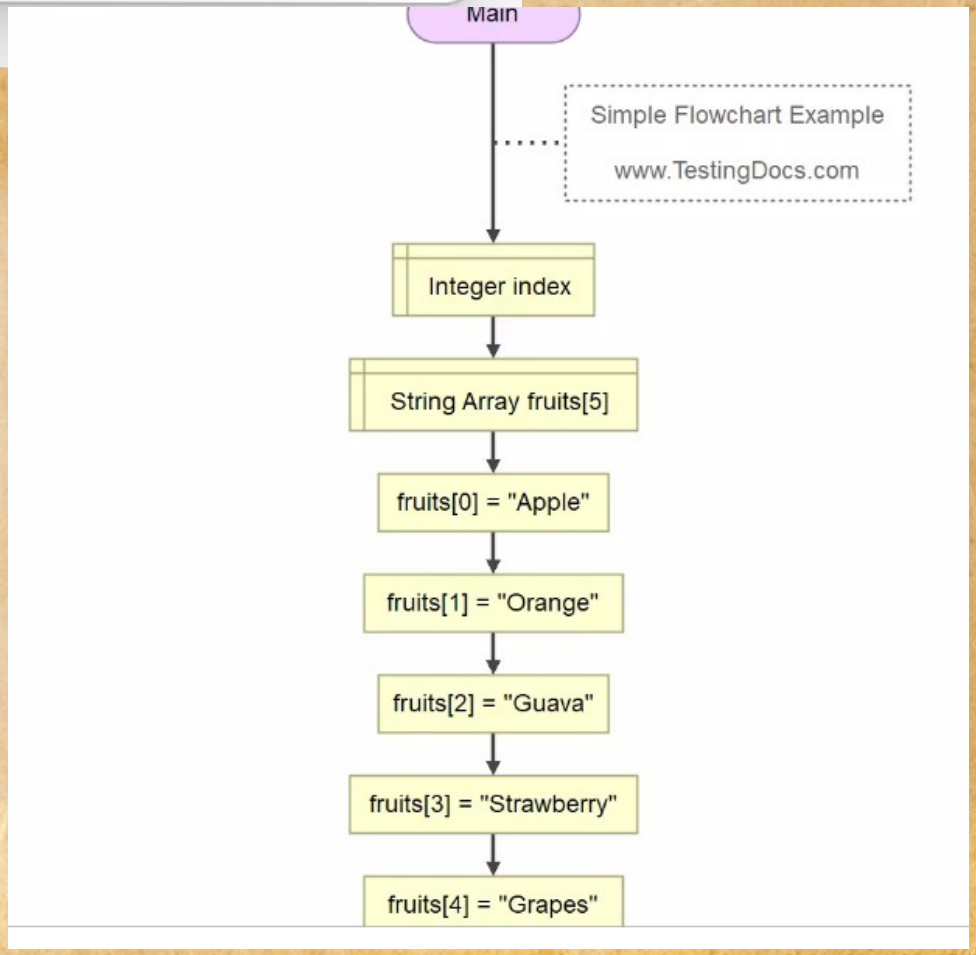
Main
Simple Flowchart Example
www.TestingDocs.com
Integer index
String Array fruits[5]
fruits[0] = "Apple"
fruits[1] = "Orange"
fruits[2] = "Guava"
fruits[3] = "Strawberry"
fruits[4] = "Grapes"

Multi Dimensional Arrays

- In C, arrays can have more than one dimension. This is done by declaring an array of arrays.
- Declare it using the syntax “type name[size1][size2];”.
- where “type” is the type of data you want to store.
- “name” is the name of the array.
- “size1” and “size2” are the sizes of the two dimensions.

Advantages of Arrays

- Code readability, easier to debug, efficient memory utilization, and easier to manipulate data.
- Also be used to store large amounts of data efficiently.
- For example, if you need to store a large number of student records, you can use an array to store all of the records in one place, instead of declaring separate variables for each student.

Limitations of Arrays

- Limited in size. Once declared, its size cannot be changed.
- Also, the elements of an array must be of the same type.
- They are static structures, which means that they cannot easily be resized or reordered. This makes it difficult to insert or remove elements from an array.

Introduction of Strings

- A string is a sequence of characters, used to store and manipulate text.
- In C languages, Stings are represented by an array of characters.
- Used to represent words, sentences, and other data types. Also used to store and manipulate data in a structured way.
- Allow for the manipulation of strings such as concatenation, searching, replacing, case conversion, character extraction,searching within a strings.

Declaration of Strings

- A string Variable is declared as an array of characters.
- Syntax:

  char string_name[size];

- E.g char name[20];
- When the compiler assigns a character string to a character array, it automatically supplies a null character (‘\0’) at the end of the string.

Initialization String Variable .

	0	1	2	3	4	5
str	G	e	e	k	s	\0
Address	0x23452	0x23453	0x23454	0x23455	0x23456	0x23457

```
char name[4]={'R','A','M', '\0'};
char name[]={'R','A','M', '\0'};
```

OR

```
char name[4]="RAM";
char name[]="RAM";
```

R	A	M	\0
name[0]	name[1]	name[2]	name[3]

String handling functions.

- Strings need to be manipulated by programmers.

- It can be done manually but is time consuming .
- Are defined in <string.h >.

Some string handling Functions.

- Functions
- strlen()
- scrcpy()
- strcat()
- strlwr()
- strupr()

- Work of function
- Calculates the length of strings.
- Copies a string to another string.
- Concatenates(jones) two strings.
- Compare two strings.
- Converts string to lowercase
- Converts string to uppercase.

Combination of Arrays and Strings.

- Combining arrays and strings in C is possible, can be used to create complex data structures.
- Can create an array of strings, which can be used to store a list of words.
- Can combine strings and arrays to create multi-dimensional data structures, used to store more complex data.
- Possible to manipulate both arrays and strings in the same loop. Used to search for specific data, sort data, and modify data.

Transistor & Types

- A transistor is a semiconductor device used to amplify or switch electronic signals and electrical power .
- Composed of semiconductor material with at least three terminals for connection to an external circuit.
- FET

  1. JFET

  2. MOSFET

MOSFET

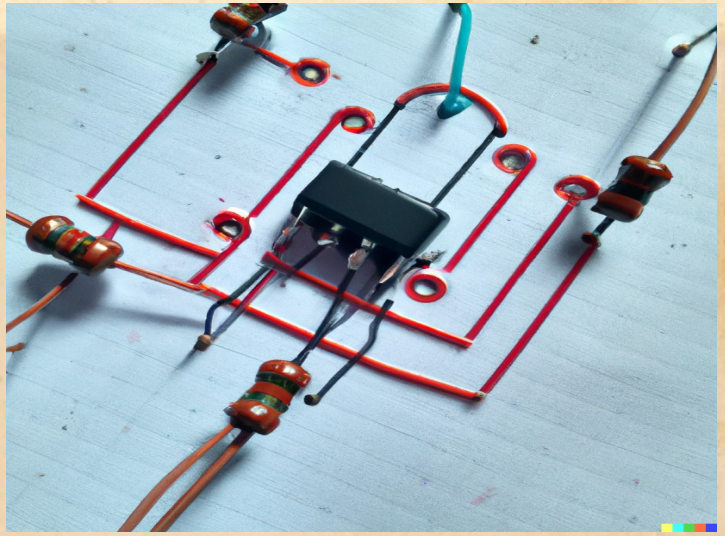

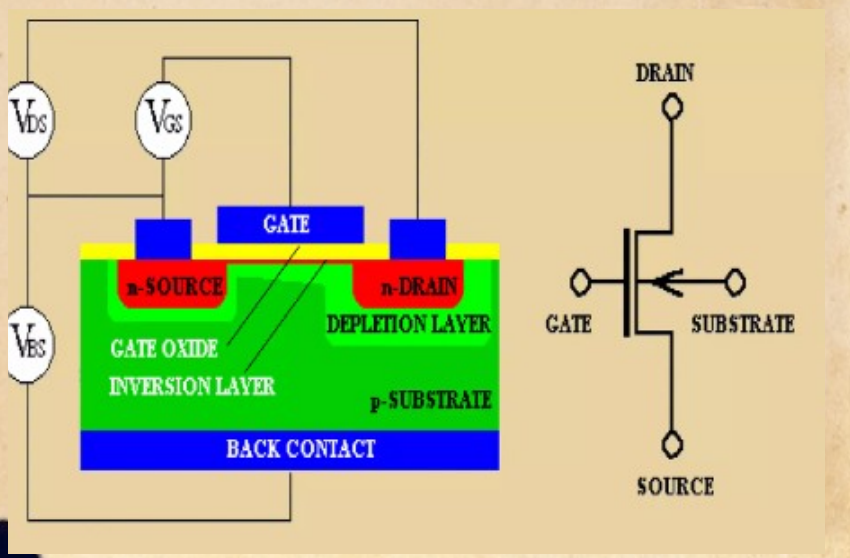

- Stands for Metal-Oxide-semiconductor field effect transistor.
- Is a three terminal device with gate(G), source(S) and drain(D).
- Commonly used in the field of power electronics.

Schematic Structure of MOSFET

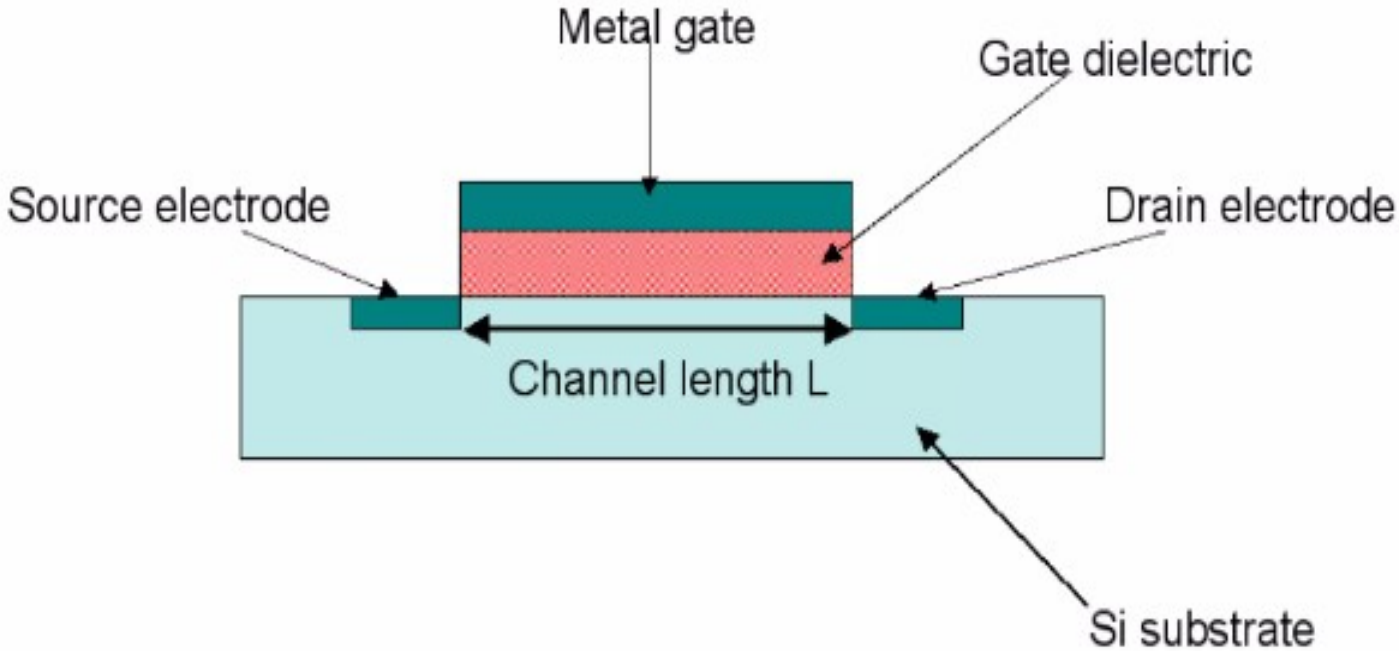

Working principle of MOSFET

- The working principle of MOSFET depends upon the MOS capacitor.
- The MOS capacitor is the main part.
- The semiconductor surface at below the oxide layer and between the drain and source terminal can be inverted from p-type and n-type by applying a positive or negative gate voltages respectively.
- When we apply positive gate voltage the holes present beneath the oxide layer experience repulsive force and the holes are pushed downward with the substrate.

Working principle of MOSFET.

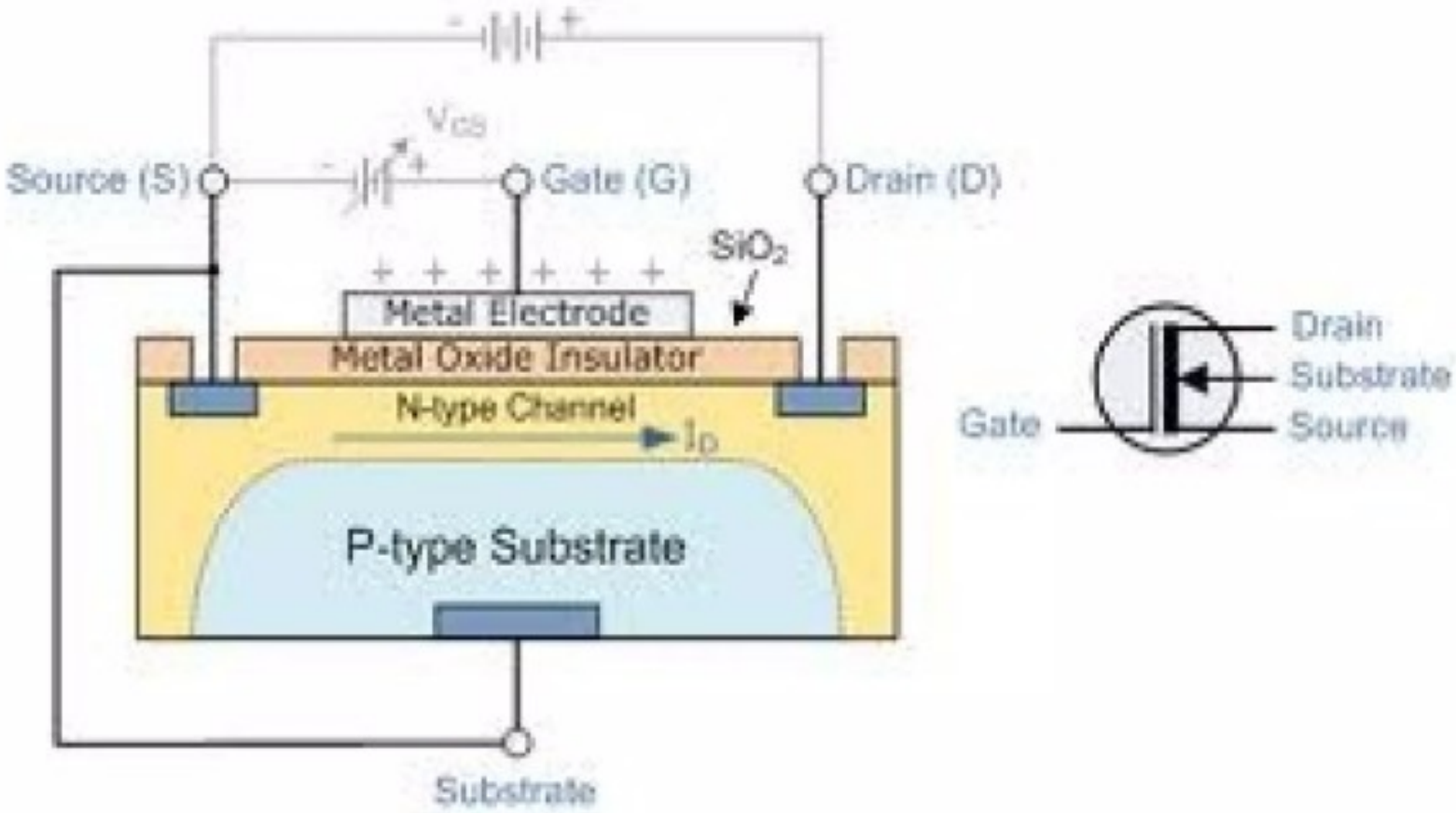

Working principle of MSOFET

- The depletion region is populated by the bound negative charges, which are associated with the acceptor atoms.
- The positive voltage and attracts electrons from the n+ source and drain regions in to the channel.
- The electron reach channel is formed. Now, if a voltage is applied between the source and the drain, current flows freely between the source and drain gate voltage controls the electrons concentration the channel.
- Instead of positive if apply negative voltage a hole channel will be formed beneath the oxide layer.

MOS transistors symbol.

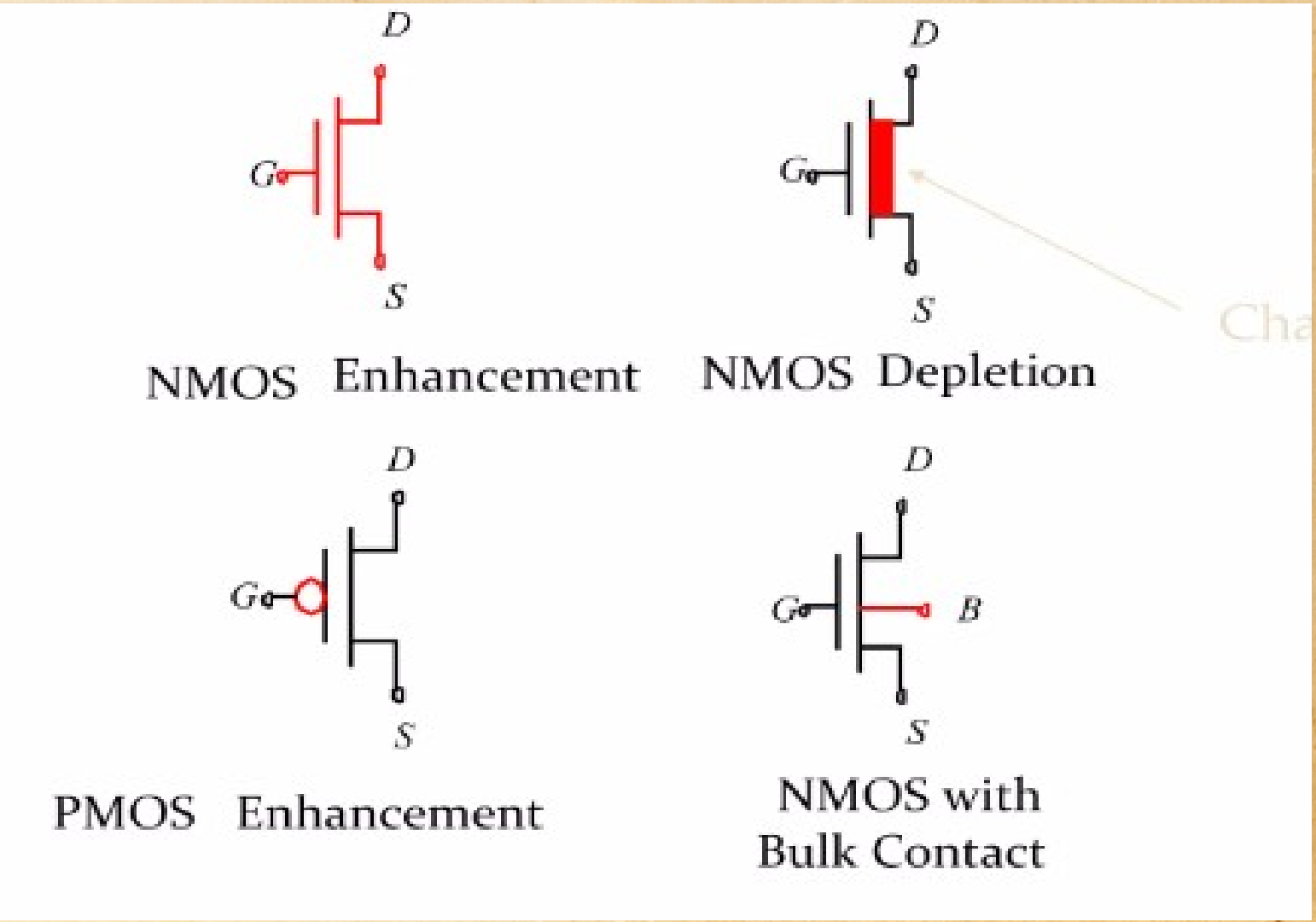

N and P channel of MOSFET

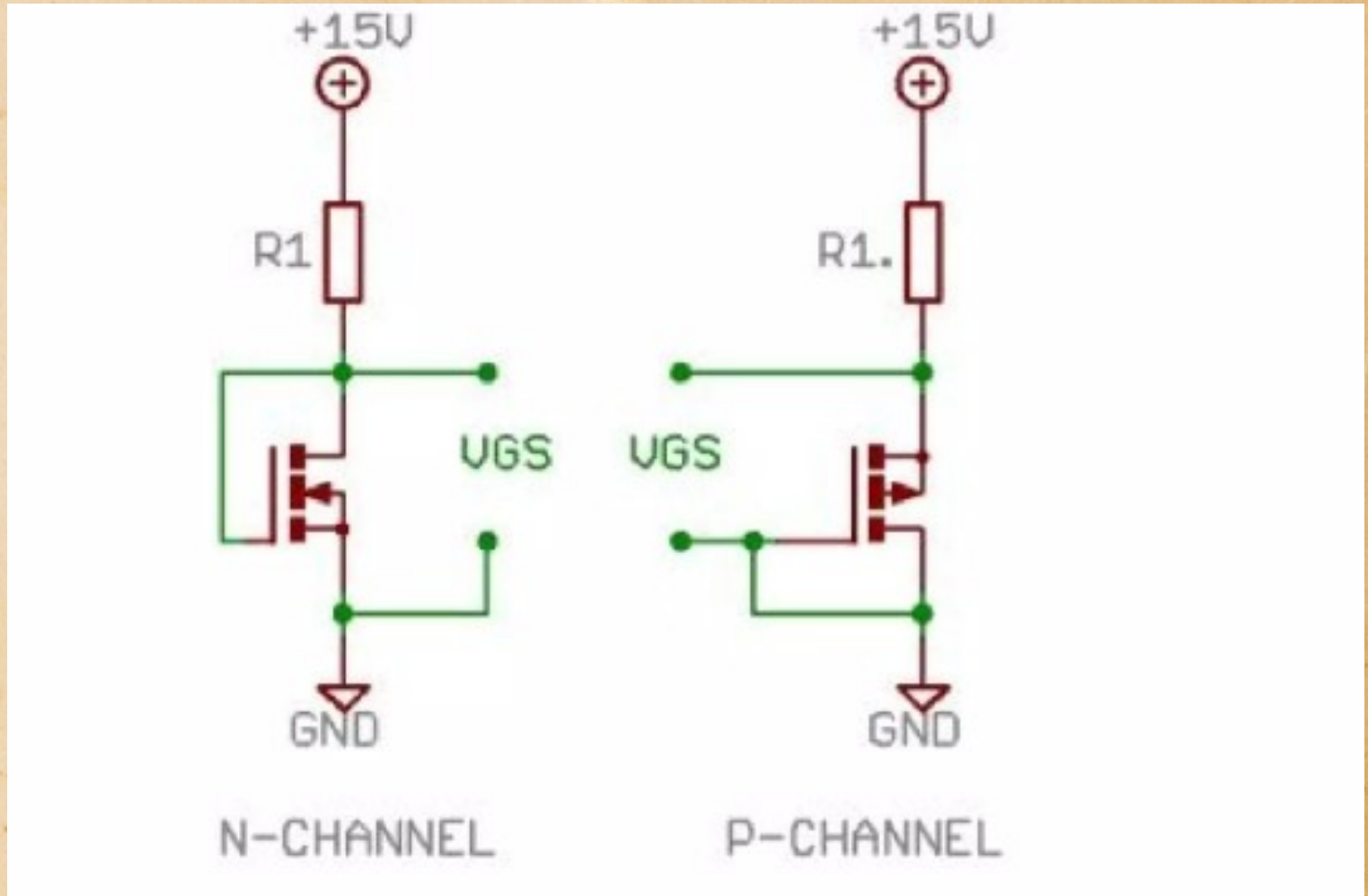

N and P channel of MOSFET

- If the MOSFET is an n-channel or nMOS FET, then the source and drain are ‘n+’ regions and the body is a ‘p’ region.
- If the MOSFET is a p-channel or pMOS FET, then the source and drain are ‘p+’ regions and the body is a ‘n’ region.

Enhancement Type.

- NO channel between the source and drain unless a voltage is applied to the gate.
- Channel is created by applying a positive voltage to the gate terminal with respect to the source terminal.
- Positive voltage attracts electrons from the source of the substrate, creating a channel for the current to flow between the source and drain terminals.
- Current flows through the MOSFET only when the gate voltage exceeds a certain threshold voltage level.
- Commonly used in digital circuits, switching applications, and amplifiers.
- They offer high input impedance, low output impedance, and low power consumption.

Depletion-type MOSFET

- Normally on , there is a channel between the source and drain unless a voltage is applied to the gate.
- Here, a negative voltage is applied to the gate terminal with respect to the source terminal to control the current flows.
- Used in applications where a constant current source or a variable resistance is required.
- Can be used in voltage controlled resistors, amplifiers, and voltage regulators.
- Offer higher output impedance compared to enhancement type MOSFETs.
- Less commonly used in digital circuits and switching applications compared to enhancement types.

D-MOSFET & E-MOSFET

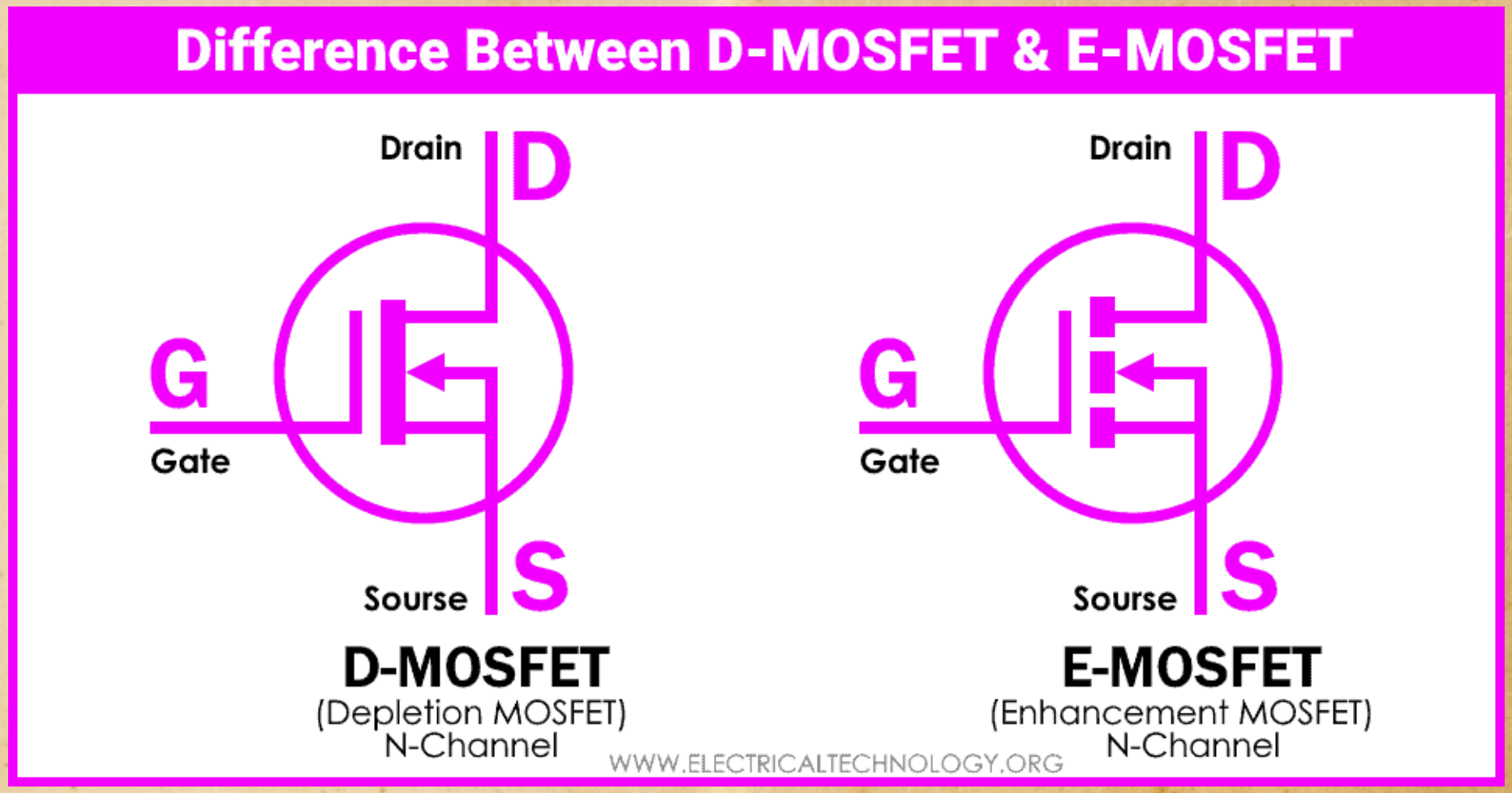

MOSFET Applications.

- MOSFET are used in digital integrated circuits, such as microprocessors.
- Used in calculators.
- Used in memories and in logic CMOS gates.
- Used as analog switches.
- MOSFET device are also applied in audio-freqency power amplifiers for public address systems.

Application of MOSFET

- Used as amplifiers.
- Used in the applications of power electronics and switch mode power supplies.
- MOSFETs are used as oscillators in radio system.
- Used in automobile sound systems and in sound reinforcement systems.

Applications

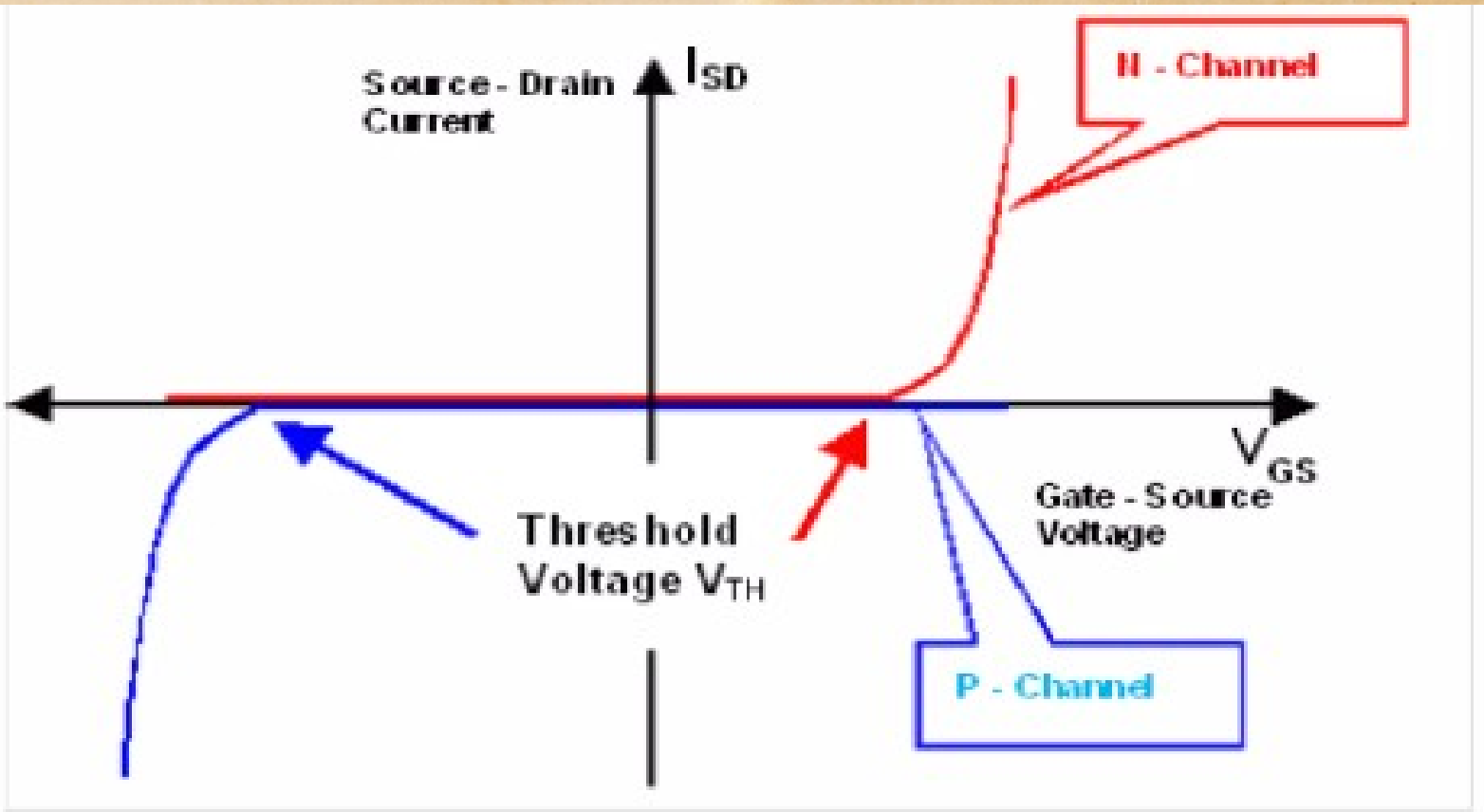

Limitations of MOSFET

- Overheating is very much a concern when considering today’s integrated circuits contain millions of transistors in a relatively small space.
- Recentlty, the small of MOSFETs have created operational problems as producing such tiny tarnsistors is an enroumous challenge.

Biodata

- Biodata is a type of personal information that is collected about an individual.
- Used to identify and assess the suitability of an individual for a position or role.
- Often used in the recruitment and selection process, and includes information such as name, age, gender, education, qualifications, employment history, and other relevant information.
- Biodata is used to evaluate the skills, abilities, and aptitudes of a person.
- used to assess the person's suitability for a specific role or job.
- The information collected is used to create a profile of the individual and to determine if they are the right fit for the position.
-

Types of BIODATA

- There are several types of biodata, including personal biodata, professional biodata, and psychological biodata.
- Personal biodata includes information such as name, age, gender, and contact information.
- Professional biodata includes information such as education, qualifications, and employment history.
- Psychological biodata includes information such as personality traits, attitudes, and behavior.

Uses of Biodata.

- Biodata can be used to evaluate a person's suitability for a position or role.
- It can also be used to assess the person's skills, abilities, and aptitudes.
- The information collected is used to create a profile of the individual and to determine if they are the right fit for the position.

Uses of Biodata

- Biodata is often used in the recruitment and selection process.It is used to assess the suitability of an individual for a position or role.
- The information collected is used to create a profile of the individual and to determine if they are the right fit for the position.
- Biodata can also be used to evaluate a person's skills, abilities, and aptitudes.
- It can be used to assess the person's suitability for a specific role or job. Use to assess the person's personality traits, attitudes, and behavior.
-

Advantages of Biodata

- Quick and easy way to assess the suitability of an individual for a position or role.
- Evaluate the skills, abilities, and aptitudes of a person. It is also an effective way to assess the person's personality traits, attitudes, and behavior.
- Biodata is also an efficient way to collect and store information about an individual.
- The information is easily accessible and can be used to make decisions quickly and accurately.

Disadvantages of Biodata

- Biodata is that it can be biased.
- Biodata can also be inaccurate or incomplete, which can lead to incorrect decisions.
- Biodata can also be time-consuming and expensive to collect and store.
- It can also be difficult to interpret the data accurately, which can lead to incorrect decisions.
-

Components of biodata

- A typical bio data includes the following components:
- Personal Information: Name, address, phone number, email address, date of birth, gender, and marital status.
- Educational Qualifications: List of academic degrees, certifications, and courses completed, along with the institution's name and year of completion.
- Work Experience: Details of past and current employment, including job title, company name, duration, and job responsibilities.

Components of biodata

- Skills: A list of skills and abilities relevant to the job or field, such as technical skills, communication skills, language proficiency, etc.
- Achievements: Any notable accomplishments or awards received during the individual's academic or professional career.
- Interests: Hobbies, extracurricular activities, and other interests that showcase the individual's personality and potential.
- Format: Bio data can be presented in various formats, such as chronological, functional, or combination format, depending on the individual's career level and work experience.

Tips to create effective Bio Data

- Tailor the content to the specific job or institution you are applying to.
- Keep the information concise and relevant.
- Use bullet points and headings to improve readability.
- Proofread and edit for grammar and spelling errors.
- Ensure that the formatting is consistent and professional.

!!!!!!!!!Thank You!!!!!!!