LiPo Charger

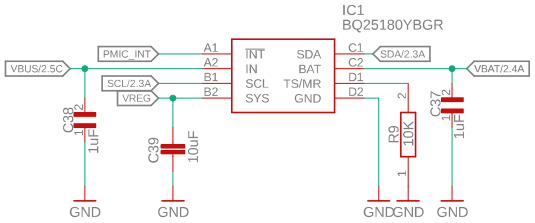

DC/DC

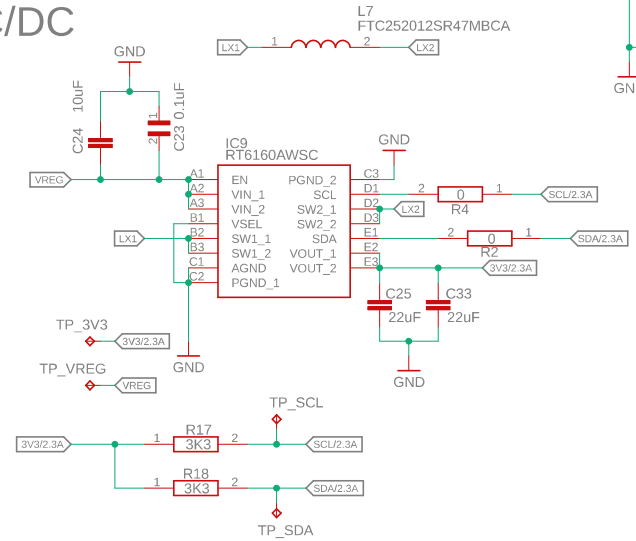

IMU

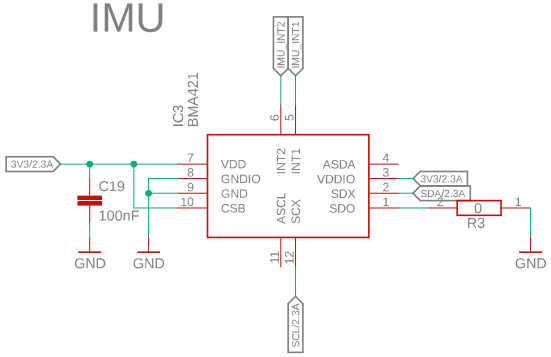

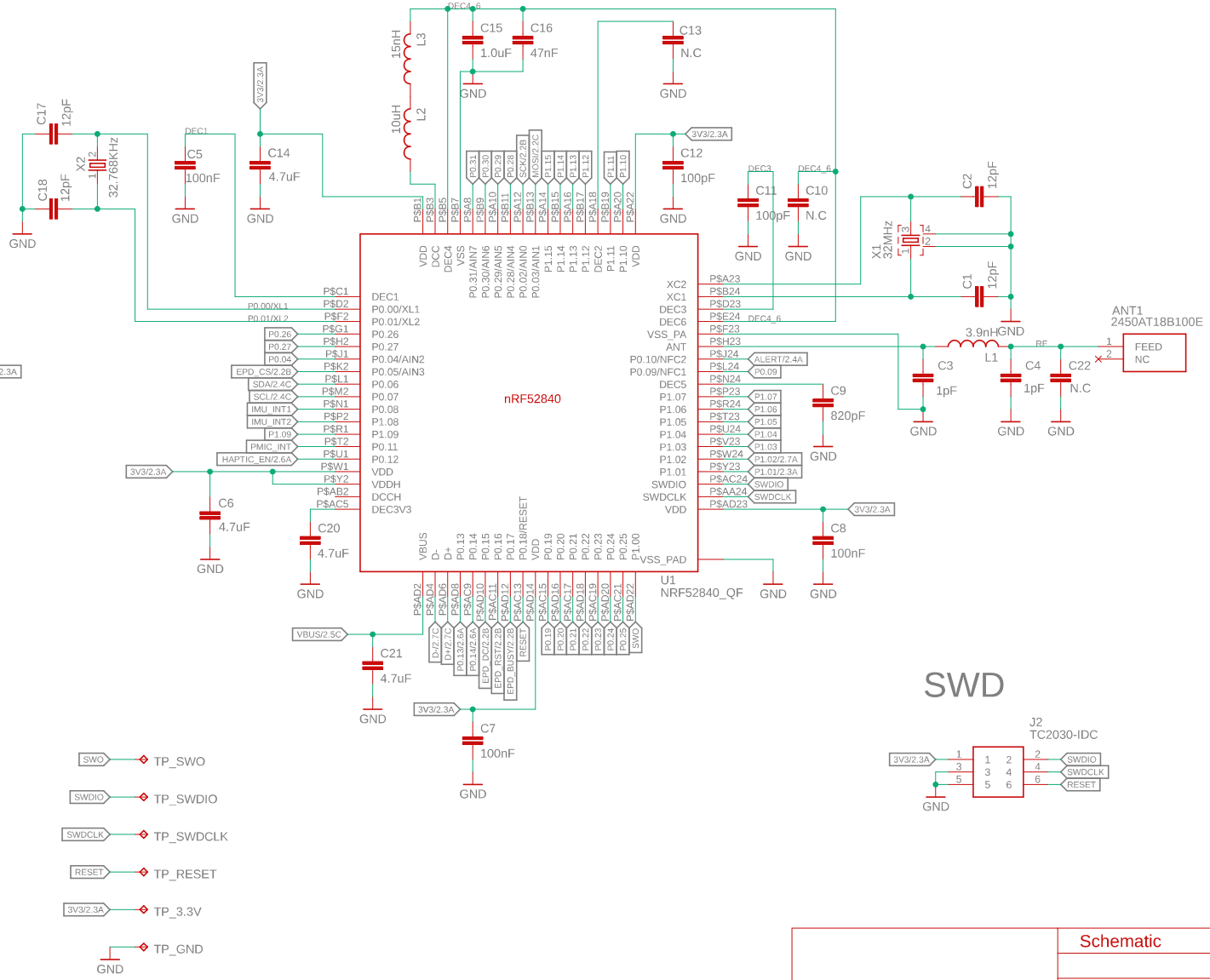

SWD

Schematic	
Sheet: 1/2	

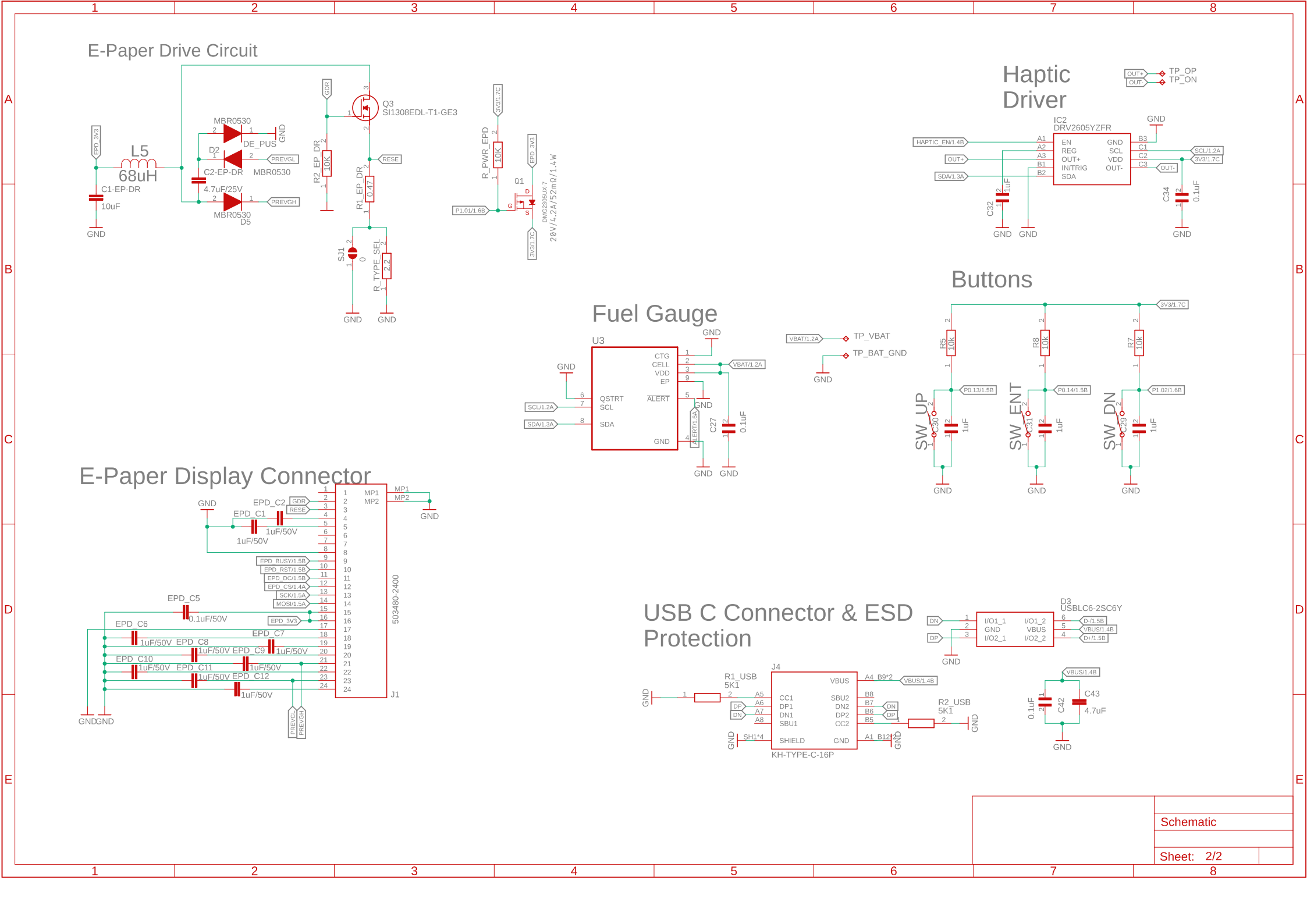
E-Paper Drive Circuit
L5
68uH
EPD_3V3
C1-EP-DR
10uF
GND
MBR0530
DE_PUS
D2
C2-EP-DR
4.7uF/25V
MBR0530
D5
PREVGL
PREVGH
GDR
R2_EP_DR
10K
Q3
SI1308EDL-T1-GE3
RESE
R1_EP_DR
0.47
SJ1
R_TYPE_SEL
2.2
3V3/1.7C
R_PWR_EPD
10K
P1.01/1.6B
Q1
DMG2305UX-7
20V/4.2A/52mΩ/1.4W
Haptic Driver
IC2
DRV2605YZFR
HAPTIC_EN/1.4B
OUT+
SDA/1.3A
EN
REG
OUT+
IN/TRIG
SDA
GND
SCL
VDD
OUT-
SCL/1.2A
3V3/1.7C
OUT-
C32
1uF
C34
0.1uF
TP_OP
TP_ON
Fuel Gauge
U3
CTG
CELL
VDD
EP
QSTRT
SCL
SDA
ALERT
GND
VBAT/1.2A
SCL/1.2A
SDA/1.3A
ALERT/1.6A
C27
0.1uF
TP_VBAT
TP_BAT_GND
Buttons
3V3/1.7C
R5
10k
R8
10k
R7
10k
P0.13/1.5B
P0.14/1.5B
P1.02/1.6B
SW_UP
SW_ENT
SW_DN
C30
C31
C29
1uF
E-Paper Display Connector
EPD_C1
EPD_C2
1uF/50V
GDR
RESE
MP1
MP2
EPD_BUSY/1.5B
EPD_RST/1.5B
EPD_DC/1.5B
EPD_CS/1.4A
SCK/1.5A
MOSI/1.5A
EPD_3V3
EPD_C5
0.1uF/50V
EPD_C6
EPD_C7
EPD_C8
EPD_C9
EPD_C10
EPD_C11
EPD_C12
503480-2400
J1
PREVGL
PREVGH
USB C Connector & ESD Protection
D3
USBLC6-2SC6Y
I/O1_1
GND
I/O2_1
I/O1_2
VBUS
I/O2_2
D-/1.5B
VBUS/1.4B
D+/1.5B
DN
DP
R1_USB
5K1
J4
VBUS
CC1
DP1
DN1
SBU1
SHIELD
SBU2
DN2
DP2
CC2
GND
A4 B9*2
B8
B7
B6
B5
A1 B12
SH1*4
KH-TYPE-C-16P
R2_USB
5K1
C42
0.1uF
C43
4.7uF
Schematic
Sheet: 2/2