SRI KRISHNA COLLEGE OF TECHNOLOGY
(An Autonomous Institution)
Affiliated to Anna University and Approved by AICTE
KOVAIPUDUR, COIMBATORE – 641 042.

SRI KRISHNA INSTITUTIONS

BONAFIDE CERTIFICATE

Certified that this project report "**A RESILIENT LORA MESH FOR SOLDIER LOCALIZATION AND HEALTH SURVEILLANCE"** is the bonafide work of **Kavin Krishna S(727822TUEC102), Nithish Kumar R (727822TUEC133), Palanivel M(727822TUEC135)** who carried out the project work under my supervision.

SIGNATURE	**SIGNATURE**
Dr. MUTHULAKSHMI K	**Dr.P.DIVYA**
HEAD OF THE DEPARTMENT	**SUPERVISOR**
Professor, Department of Electronics and Communication Engineering, Sri Krishna College of Technology, Coimbatore-641042	Assistant Professor, Department of Electronics and Communication Engineering, Sri Krishna College of Technology, Coimbatore-641042

Certified that the candidates were examined by us in the Project Phase II Viva Voce examination held on _____ at Sri Krishna College of Technology, Kovaipudur, Coimbatore- 641042

INTERNAL EXAMINER **EXTERNAL EXAMINER**

SRI KRISHNA COLLEGE OF TECHNOLOGY

(An Autonomous Institution)

Affiliated to Anna University and Approved by AICTE

KOVAIPUDUR, COIMBATORE – 641 042

SRI KRISHNA INSTITUTIONS

DECLARATION

We affirm that the project report titled "**A RESILIENT LORA MESH FOR SOLDIER LOCALIZATION AND HEALTH SURVEILLANCE"** being submitted in partial fulfilment for the award of **BACHELOR OF ENGINEERING in ELECTRONICS AND COMMUNICATION ENGINEERING** is the original work carried out by us. It has not formed part of any other project report or dissertation on the basis of which a degree or award was conferred on an earlier occasion on this or any other candidate.

Name	Reg. No.	Signature
KAVIN KRISHNA S	**727822TUEC102**	
NITHISH KUMAR R	**727822TUEC133**	
PALANIVEL M	**727822TUEC135**	

I certify that the declaration made by the above candidates is true to the best of my knowledge.

Name and Signature of the Supervisor with Date

ABSTRACT

In modern defense systems, real-time monitoring of soldiers' health and location is crucial for ensuring their safety and operational efficiency during missions. The proposed project, "A Resilient LoRa Mesh for Soldier Localization and Health Surveillance," is designed to develop a reliable, low-power, and long-range wireless communication system using LoRa (Long Range) technology. The system consists of a transmitter (soldier node) and a receiver (base station), both built around the ESP32 microcontroller. The soldier node continuously measures vital parameters such as body temperature, heart rate, gas concentration, and motion, while also tracking the soldier's geographical position through a GPS module. This data is transmitted wirelessly to the base station using the LoRa RA-02 module, which ensures stable communication even in areas lacking internet or mobile connectivity. The base station receives, processes, and displays the transmitted information in real time, allowing the control unit to monitor the soldier's health and location efficiently. The system operates with low power consumption, high range, and strong signal stability, making it highly suitable for remote field applications. The successful implementation of this project demonstrates the potential of LoRa communication for developing secure, scalable, and energy-efficient solutions for defense and emergency response operations.

.

ACKNOWLEDGEMENT

I owe my deepest gratitude to the management of Sri Krishna College of Technology, Coimbatore, Tamil Nadu, for providing all the necessary facilities and resources to accomplish my project work.

We express our sincere thanks to **Dr. M.G. SUMITHRA, M.E., Ph.D.,** Principal, Sri Krishna College of Technology, for offering the support needed to carry out this project.

We extend our genuine gratitude and respect to **Dr. K. MUTHULAKSHMI, M.E., Ph.D.,** HOD, Department of Electronics and Communication Engineering, for her thoughtful attention and eminent guidance throughout the project.

We are greatly thankful to our project coordinators, **Dr. K. SHANTHI, M.E., Ph.D., Associate Professor**, and to our project guide, **Dr. P. DIVYA, M.E., Ph.D., Assistant professor** for their insightful comments, inspirational guidance, and valuable suggestions for the completion of this project.

We also express our deepest thanks to all the other staff members for their helpful suggestions and support during the course of the study. I am highly indebted to my family for their moral support throughout this work. Once again, I extend my heartfelt thanks to all concerned.

TABLE OF CONTENTS

CHAPTER NO.	TITLE	PAGE NO.
	ABSTRACT	iv
	ACKNOWLEDGEMENT	v
	LIST OF FIGURES	viii
	LIST OF ABBREVIATIONS	ix
1	**INTRODUCTION**	1
	1.1 INTRODUCTION	1
	1.2 NEED FOR SOLDIER TRACKING AND HEALTH MONITORING	5
	1.3 EXISTING SYSTEM	8
	1.4 OBJECTIVE OF THE PROJECT	12
	1.5 APPLICATIONS	13
	1.6 ORGANIZATION OF THE REPORT	15
	1.7 CONCLUSION	16
2	**LITERATURE SURVEY**	17
	2.1 INTRODUCTION	17
	2.2 LITERATURE SURVEY	18
	2.3 BASE PAPER SURVEY	20
	2.4 RELATED WORK	22
	2.5 CONCLUSION	23
3	**PROPOSED SYSTEM**	24
	3.1 INTRODUCTION	24
	3.2 PROPOSED SYSTEM	25

	3.3	BLOCK DIAGRAM DESCRIPTION	30
	3.4	HARDWARE REQUIRED	31
		3.4.1 ESP 32 MICROCONTROLLER	31
		3.4.2 LORA MODULE	32
		3.4.3 GPS MODULE	33
		3.4.4 PULSE SENSOR	34
		3.4.5 TEMPERATURE SENSOR	34
		3.4.6 SOUND SENSOR	35
		3.4.7 ACCELEROMETER	36
		3.4.8 LCD MODULE	37
	3.5	SOFTWARE REQUIREMENT	38
		3.5.1 ARDUINO IDE	39
		3.5.2 EMBEDDED C	40
	3.6	METHODOLOGY	42
	3.7	CONCLUSION	47
4	**RESULT AND FUTURE ENHANCEMENT**		49
	4.1	INTRODUCTION	49
	4.2	RESULTS AND DISCUSSION	49
	4.3	FUTURE SCOPE	52
	4.4	CONCLUSION	52
5	**CONCLUSION**		53
	REFERENCES		54

LIST OF FIGURES

FIGURE NO.	TITLE	PAGE NO.
1.1	BASIC CONCEPT	1
1.2	OVERVIEW OF LORA	2
1.3	REAL TIME SCENARIO	4
1.4	SOLDIER MONITORING	7
1.5	EXISTING SYSTEM	10
3.1	SOLDIER NODE	27
3.2	BASE STATION	29
3.3	ESP32	32
3.4	LORA MODULE	32
3.5	GPS MODULE	33
3.6	PULSE SENSOR	34
3.7	TEMPERATURE SENSOR	35
3.8	SOUND SENSOR	36
3.9	ACCELEROMETER	37
3.10	LCD MODULE	37
3.11	ARDUINO IDE	40
3.12	EMBEDDED C PROGRAM	41
3.13	FLOW DIAGRAM	44
4.1	SOLDIER NODE	50
4.2	BASE STATION	51

LIST OF ABBREVIATION

ABBREVIATION	FULL FORM
ESP32	Espressif Systems 32-bit Microcontroller
LoRa	Long Range Radio
GPS	Global Positioning System
LCD	Liquid Crystal Display
IC	Integrated Circuit
LED	Light Emitting Diode
ADC	Analog to Digital Converter
MCU	Microcontroller Unit
VCC	Voltage Common Collector
GND	Ground

CHAPTER 1

INTRODUCTION

1.1 INTRODUCTION

In the current world scenario, the security of a nation is the uttermost important factor, and the security of a nation depends on the army force [1]. Without the soldier, it would be nearly impossible to protect a nation. Soldiers are deployed in complex and unpredictable environments where maintaining constant communication with the command center becomes a major challenge. During combat operations, natural obstacles such as mountains, forests, and urban structures can obstruct traditional communication systems, leading to delays or complete loss of connectivity. In addition to operational risks, soldiers are also exposed to extreme physical stress, fatigue, injuries, and hazardous environmental conditions as shown in fig. 1.1.

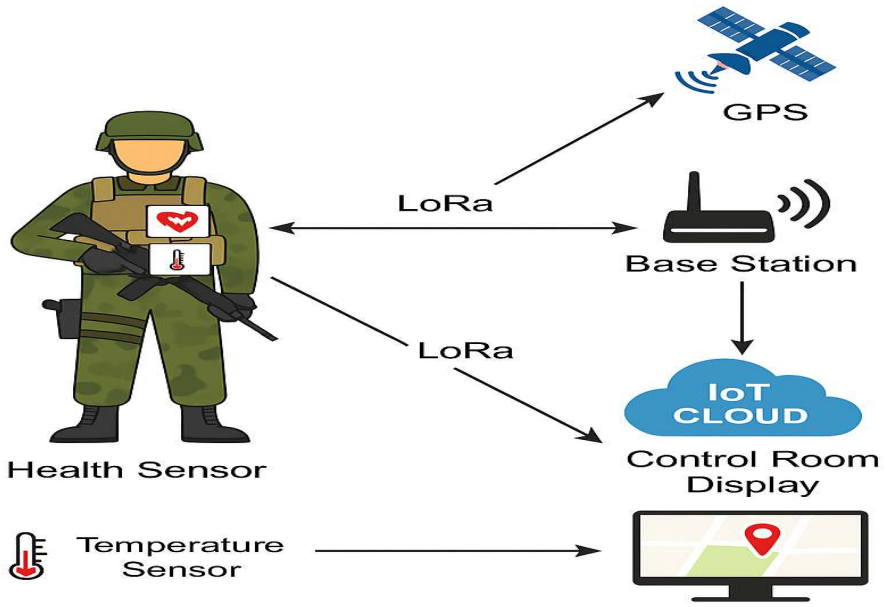

FIGURE 1.1 – BASIC CONCEPT OF LORA-BASED SOLDIER TRACKING AND HEALTH MONITORING SYSTEM

Therefore, it becomes essential to develop an intelligent monitoring system that ensures both communication reliability and continuous health supervision. There is a necessity

to develop wearable technology that is lightweight, compact, and energy-efficient so that it does not hinder the soldier's mobility while providing accurate real-time monitoring [2][3]. Such a system should be capable of continuously tracking the geographical position of the soldier and monitoring vital health parameters without requiring manual intervention. By integrating sensors and wireless modules into a single wearable platform, the collected data can be processed and transmitted automatically to the base station. Using this soldier navigation system, the base station can guide the soldier to reach the desired destination safely and efficiently during missions [4]. This focuses on tracking the location of the soldier, which is useful for the control room station to know the exact position of the soldier and accordingly guide them [5]. Continuous tracking also reduces response time in emergency situations and improves situational awareness on the battlefield, as shown in Fig. 1.2.

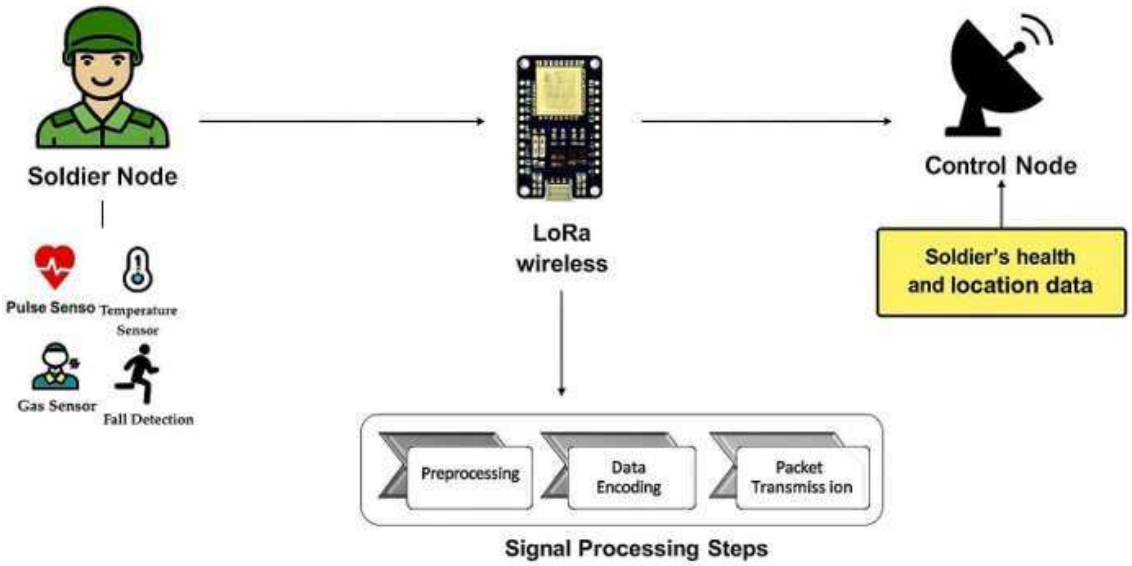

FIGURE 1.2 – OVERVIEW OF LORA COMMUNICATION SYSTEM

This seamless monitoring capability further integrates with advanced communication and networking technologies to enhance coordination and data sharing among soldiers and command units, which naturally leads to the incorporation of wireless and IoT-based systems in modern defense applications.

Also, high-speed, short-range soldier-to-soldier wireless communication is employed to relay information related to situational awareness, including biomedical sensor data, GPS navigation details, and tactical communication signals [6][7]. In modern battlefield environments, coordination between soldiers is extremely critical, and the ability to exchange information instantly can significantly influence mission outcomes. Short-range wireless links enable nearby soldiers to share real-time updates regarding their physical condition, movement status, and surrounding environmental conditions. This peer-to-peer communication improves team synchronization and allows rapid response to dynamic combat situations. By integrating such wireless capabilities, the system ensures that both individual soldiers and the command center remain continuously informed about field conditions.

The biosensor module incorporated in the system consists primarily of a temperature sensor and a heartbeat sensor, which continuously monitor the health status of the soldier [8][9]. The temperature sensor measures the soldier's body temperature to detect abnormal rises that may indicate fever, dehydration, or heat stress. Similarly, the heartbeat sensor tracks pulse rate variations, which can reveal signs of fatigue, stress, or medical emergencies. Continuous monitoring of these physiological parameters is essential because soldiers are often subjected to intense physical exertion and extreme environmental conditions. Any sudden deviation from normal health values can be immediately identified and transmitted to the control unit, enabling timely medical intervention and reducing the risk of severe complications.

The main essence of this project is that it is an Internet of Things (IoT) based system [10]. IoT systems consist of interconnected mechanical or digital devices, computing units, sensors, and communication modules that are capable of collecting and exchanging data autonomously over a network. These interconnected devices operate with minimal human involvement, enabling seamless data acquisition, processing, and transmission. In the context of defense applications, IoT technology plays a crucial role in integrating wearable sensors, microcontrollers, and wireless communication modules into a unified monitoring framework. Each soldier node acts as an intelligent IoT device

that senses environmental and physiological data, processes it locally, and transmits it wirelessly to a central monitoring station.

This automated data transmission ensures continuous monitoring even when the soldier is actively engaged in combat operations. The relevance of IoT in the Soldier Navigation and Health Monitoring System lies in its ability to instantly send real-time location coordinates and health parameters from the battlefield to the base station without requiring manual input from the soldier [1][10]. The system operates autonomously, reducing cognitive load on the soldier and allowing them to focus entirely on mission objectives. As illustrated in Fig. 1.3, the IoT-based architecture enables seamless communication between wearable devices, wireless modules, and the base station, thereby establishing a reliable and efficient monitoring network for modern military operations.

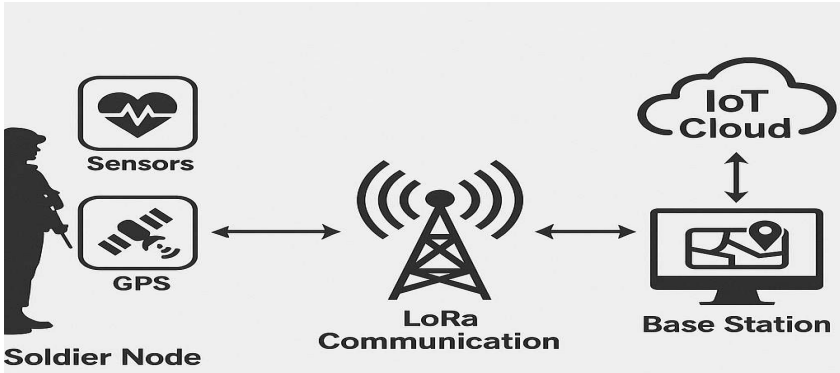

Figure 1.2: Working Principle of LoRa Communication in Soldier Tracking System

FIGURE 1.3 – REAL-TIME SCENARIO OF SOLDIER TRACKING AND HEALTH MONITORING SYSTEM

LoRa (Long Range) is a low-power wireless communication technology developed by Semtech Corporation that enables long-distance data transmission using Chirp Spread Spectrum (CSS) modulation. It operates in unlicensed Industrial, Scientific, and Medical (ISM) frequency bands such as 433 MHz, 868 MHz, and 915

MHz. LoRa is widely used in Internet of Things (IoT) applications because it provides long-range communication with minimal power consumption.

Compared to traditional wireless technologies such as Wi-Fi and Bluetooth, LoRa offers significantly larger communication coverage while consuming less energy. Under line-of-sight (LOS) conditions, LoRa can achieve communication ranges of up to 10–15 kilometers, making it suitable for remote monitoring applications. The overall LoRa communication concept used in the proposed system.

In this project, LoRa technology is used as the primary communication medium between the soldier node and the base station. The soldier node collects physiological data such as heart rate and body temperature along with GPS-based location coordinates using sensors connected to the ESP32 microcontroller. This data is transmitted wirelessly through the LoRa module to the base station, where it is received and displayed for real-time monitoring.

Due to its long communication range, low power consumption, and independence from cellular networks, LoRa is highly suitable for soldier tracking and health monitoring systems operating in remote or hostile environments.

1.2 NEED FOR SOLDIER TRACKING AND HEALTH MONITORING

In modern military operations, soldiers are often deployed in harsh and unpredictable environments where communication and real-time monitoring play a vital role in mission success and personal safety [1][9]. Battlefields today are no longer confined to clearly defined territories; instead, they extend across complex terrains that include high-altitude regions, dense forests, deserts, border zones, and even urban combat areas. In such dynamic environments, maintaining uninterrupted communication between soldiers and the command center becomes increasingly challenging. Conventional communication systems, including cellular networks and internet-dependent GPS tracking solutions, are often unreliable or completely unavailable in these remote areas [2][3]. Network congestion, signal obstruction, and infrastructure damage during conflicts further worsen the communication gap. Therefore, there is an urgent need for a dedicated, secure, and energy-efficient system

capable of continuously tracking the soldier's position while simultaneously monitoring vital health parameters such as body temperature, heart rate, and surrounding environmental conditions [2][4].

The safety of soldiers during missions has always been a primary concern for defense organizations. Soldiers are exposed to physically demanding tasks, prolonged exertion, unpredictable weather conditions, and life-threatening combat scenarios. In many critical situations, they may face extreme temperatures, oxygen deficiency at high altitudes, toxic gas exposure, dehydration, or injuries sustained during active engagement [6]. Immediate medical assistance in such circumstances can only be provided if accurate and real-time information regarding the soldier's health condition and precise location is available to the control unit. A system capable of wirelessly transmitting these parameters to the base station enables continuous health assessment and rapid decision-making. By analyzing real-time data, the command center can quickly identify abnormalities and initiate timely rescue or medical support. This proactive monitoring approach not only improves survival rates but also enhances coordination, strategic planning, and operational efficiency in military missions [9][10].

Traditional communication methods, primarily based on voice transmission through radio or walkie-talkie systems, present several limitations in modern warfare [2]. These systems generally support only voice communication and do not provide continuous health data or accurate geolocation information. Moreover, voice-based systems require active participation from soldiers, which may not be feasible during intense combat or emergency situations [7]. Communication interruptions, background noise, and signal interference can further reduce their effectiveness. In contrast, a wearable monitoring device that automatically tracks and transmits the soldier's health and positional data eliminates the dependency on manual reporting [3][6]. Such an automated system ensures periodic data transmission without requiring any action from the soldier, thereby reducing cognitive load and allowing them to focus entirely on mission objectives. This automation significantly improves reliability and ensures uninterrupted data flow to the base station [5][9].

Beyond enhancing individual safety, this system also contributes to efficient resource management and operational planning during military operations. Real-time data allows the command center to monitor multiple soldiers simultaneously, assess battlefield conditions, and allocate resources effectively. In the event of an emergency, such as sudden health deterioration or loss of movement, the control unit can instantly identify the soldier's exact condition and location, enabling rapid deployment of rescue or reinforcement teams [1][9]. This reduces response time and minimizes operational risks. As shown in Fig. 1.4, the system architecture facilitates seamless communication between the soldier node and the command center, thereby bridging the gap between field personnel and central control [5][10].

Overall, the implementation of a real-time soldier tracking and health monitoring system significantly enhances situational awareness, strengthens operational safety, and improves mission coordination.

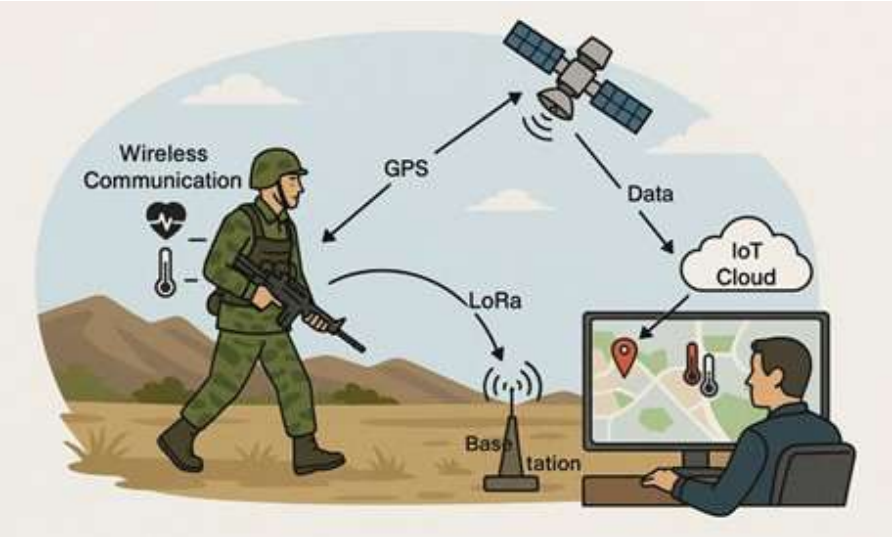

FIGURE 1.4 – REAL-TIME SOLDIER TRACKING AND HEALTH MONITORING SCENARIO

In conclusion, the need for soldier tracking and health monitoring arises from the critical requirement of maintaining constant communication and ensuring the safety of personnel during missions. By adopting wireless technologies like LoRa, the military can establish a reliable, secure, and energy-efficient network capable of

transmitting vital data even in areas without traditional connectivity [2][4][9]. This system plays a crucial role in modern defense strategies, enhancing both soldier safety and mission effectiveness through continuous monitoring and rapid response capabilities [1][10].

1.3 EXISTING SYSTEM

In the existing system, various communication and monitoring technologies have been implemented to track soldiers and collect their health data during missions [1][9]. Over the years, defense research has focused on integrating GPS-based tracking devices, wireless transmitters, and biomedical sensors to improve situational awareness. However, most of these systems rely heavily on cellular networks, satellite communication, or internet-based platforms to transmit data from the battlefield to the command center [2][3]. While such infrastructure-based communication works efficiently in urban or semi-urban areas, it becomes unreliable in remote or hostile environments where network coverage is weak, intermittent, or completely unavailable. Battlefield conditions such as damaged communication towers, signal blockage due to terrain, or intentional signal jamming can further disrupt connectivity, thereby limiting the effectiveness of these systems.

Traditional soldier tracking systems primarily use the Global Positioning System (GPS) to determine geographical location and GSM/GPRS modules to transmit data to the control center [4][5]. Under normal network conditions, these technologies are capable of providing real-time location updates. However, their performance significantly degrades in areas where mobile network coverage is limited, such as mountainous regions, dense forests, border zones, or underground environments [6][7]. In such situations, the inability of GSM modules to establish a stable connection result in communication breakdowns, preventing the base station from receiving vital updates regarding the soldier's health or position [3][8]. This delay or loss of data transmission can critically affect decision-making and emergency response during combat operations.

Earlier health monitoring systems were often developed as standalone units capable of measuring physiological parameters such as heart rate, body temperature, and oxygen

saturation [1][10]. Although these systems could record biometric data accurately, they lacked real-time wireless transmission capabilities. The collected data was either displayed locally on a small screen or stored in memory for later retrieval. Such an approach is impractical during active military missions where immediate access to health information is crucial. Delayed analysis of health data reduces the system's usefulness in emergency situations where rapid intervention is required.

Some advanced models attempted to integrate IoT-based cloud platforms to enable remote monitoring and centralized data analysis [5][9]. These systems allowed health and location data to be uploaded to online servers for visualization and storage. However, cloud-dependent architecture requires continuous internet connectivity, which is not always feasible in battlefield conditions [7][8].

Dependence on public or external networks also introduces potential security vulnerabilities, making such systems less suitable for sensitive military applications where secure, independent communication links are essential.

Furthermore, conventional short-range wireless communication technologies such as Wi-Fi and Bluetooth present significant limitations when applied to defense scenarios [2][4]. These technologies are designed for high data rate communication over short distances and typically operate within a range of a few meters to a few hundred meters. They are not capable of supporting long-range communication across large battlefield areas [6][9]. In addition to limited range, Wi-Fi and Bluetooth modules consume relatively high power during continuous transmission, leading to rapid battery depletion. This high energy consumption makes them unsuitable for wearable soldier devices that must operate for extended durations without frequent charging [5][7].

Another major limitation of existing systems is their lack of scalability and reliability. Many traditional solutions are designed for point-to-point communication and cannot efficiently handle multiple nodes simultaneously. When multiple soldiers attempt to transmit data at the same time, network congestion or signal interference may occur, leading to packet loss or inaccurate data reception [3][8]. Environmental factors

such as dense vegetation, uneven terrain, heavy rainfall, and atmospheric disturbances further degrade signal strength and communication reliability [1][4].

In addition to technical limitations, security concerns remain a significant drawback of conventional systems. Many earlier implementations did not incorporate robust encryption or secure authentication mechanisms, leaving sensitive military information vulnerable to interception, spoofing, or signal jamming [6][9]. Unauthorized access to soldier location and health data could compromise mission confidentiality and operational safety. As illustrated in Fig. 1.5, the existing system architecture demonstrates several weaknesses, including network dependency, limited coverage, high power consumption, and inadequate security measures.

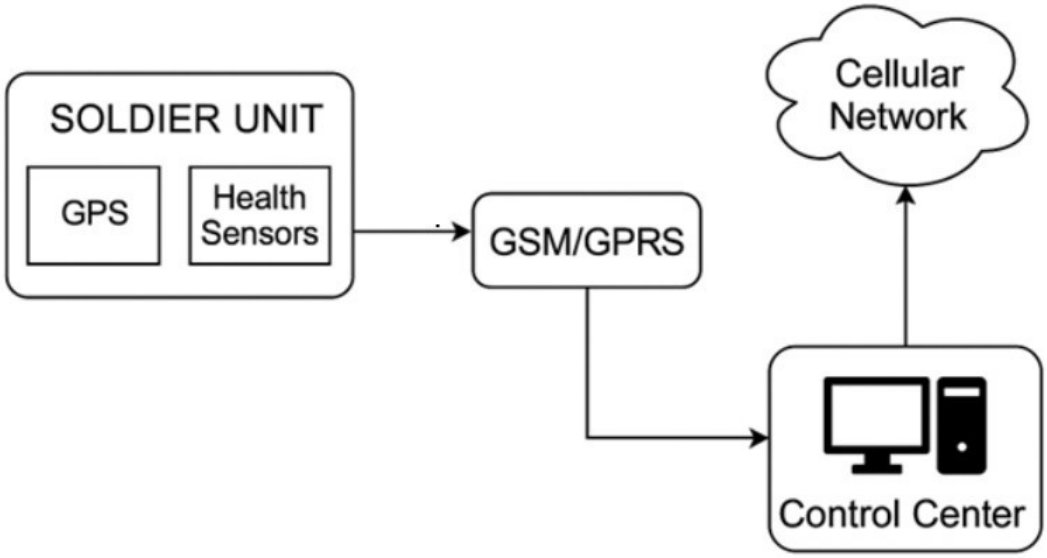

Figure 1.5 EXISTING SYSTEM

Due to these limitations, it becomes evident that a more reliable, long-range, energy-efficient, and secure communication technology is required to overcome the shortcomings of traditional soldier tracking and health monitoring systems.

Due to these drawbacks, there is a pressing need for a communication system that is completely independent of public network infrastructure, consumes minimal power,

and supports long-range as well as secure data transmission [2][7]. In military operations, reliance on commercial cellular networks or internet-based platforms introduces uncertainty, vulnerability, and potential communication failure. During combat scenarios, network towers may be unavailable, damaged, or intentionally disrupted, which directly affects mission coordination and soldier safety. Hence, a dedicated wireless communication framework that can operate autonomously without depending on external service providers is essential for defense applications.

Existing systems fail to ensure continuous and reliable communication between soldiers and the command center, particularly in remote, inaccessible, or high-risk environments such as mountainous terrains, dense forests, border regions, and underground tunnels [4][9]. In such scenarios, maintaining uninterrupted connectivity becomes extremely challenging. Communication interruptions not only delay situational updates but also compromise the ability of the command center to respond promptly to emergencies. The absence of real-time health and location updates can significantly increase operational risks, especially when soldiers are exposed to life-threatening conditions.

Therefore, a new solution must address these critical limitations by integrating a low-power, long-range, and interference-resistant wireless communication technology capable of operating efficiently under harsh and unpredictable conditions [3][8]. The system should be designed to maintain stable connectivity over several kilometers while consuming minimal battery power, ensuring prolonged operation during field missions. Additionally, it must be resistant to environmental interference, signal fading, and physical obstructions that are common in battlefield environments. Security must also be a primary consideration, with encrypted data transmission and secure authentication mechanisms to prevent unauthorized access or signal manipulation.

By incorporating such advanced communication technology, the proposed system aims to provide a reliable and scalable framework for real-time soldier localization and health monitoring. This approach ensures uninterrupted data transmission, improved operational awareness, and enhanced mission safety even in the absence of traditional communication infrastructure.

1.4 OBJECTIVE OF THE PROJECT

The main objective of the project, “A Resilient LoRa Mesh for Soldier Localization and Health Surveillance” is to design and develop a low-power, long-range, and secure wireless communication system that enables real-time tracking and continuous health monitoring of soldiers deployed in remote or hostile environments. The proposed system is intended to establish reliable communication between the soldier node and the base station without relying on conventional cellular networks, internet connectivity, or external communication infrastructure. By eliminating dependency on public networks, the system ensures uninterrupted data transmission even in isolated terrains, thereby improving operational reliability and battlefield coordination.

The project aims to create an intelligent monitoring framework capable of continuously collecting, processing, and transmitting vital physiological and positional data. This includes parameters such as body temperature, heart rate, and real-time geographical coordinates. The system is designed to function autonomously, transmitting information at predefined intervals without requiring manual input from the soldier. Such automation reduces cognitive load on field personnel and allows them to focus entirely on mission objectives while the monitoring system operates in the background.

To achieve this objective, the project integrates LoRa (Long Range) wireless communication technology with the ESP32 microcontroller, which serves as the central processing unit of the system. The ESP32 reads data from various sensors, processes the information, and formats it into structured data packets for transmission via the LoRa module. Sensors such as the DS18B20 temperature sensor, pulse sensor for heart rate monitoring, and GPS module for location tracking are incorporated to ensure accurate and reliable data acquisition. The LoRa module then transmits this data over long distances to the base station, where it is received, decoded, and displayed for monitoring purposes.

Energy efficiency is a key design consideration in this project. Since soldiers may operate in the field for extended durations, the system must consume minimal power

while maintaining reliable communication. LoRa technology is specifically selected for its low power consumption and long communication range, making it ideal for wearable military applications. The integration of efficient hardware components and optimized transmission intervals ensures prolonged battery life, thereby enhancing practicality for real-world deployment.

In addition to reliable communication and energy efficiency, the system is designed to be compact, lightweight, and cost-effective. The hardware components are selected based on availability, affordability, and ease of integration, ensuring that the overall solution remains scalable and practical for multiple soldier deployments.

Architecture also allows future expansion into a mesh network configuration, where multiple soldier nodes can communicate with each other and relay information to extend coverage and improve resilience.

In summary, the project focuses on developing a robust and independent communication system that enhances soldier safety, improves situational awareness, and increases mission efficiency. By combining real-time health monitoring, precise location tracking, and long-range secure communication, the proposed system provides a reliable technological solution tailored for modern defense operations in remote and high-risk environments.

1.5 APPLICATIONS

The LoRa-based Soldier Tracking and Health Monitoring System has a wide range of applications, primarily in the defense sector, where it plays a crucial role in ensuring the safety, coordination, and operational efficiency of soldiers during missions. In military deployments, continuous monitoring of a soldier's physiological condition and precise location significantly enhances situational awareness at the command center. By providing real-time updates on parameters such as heart rate, body temperature, and geographical position, the system enables authorities to assess battlefield conditions instantly and respond quickly in case of emergencies. If a soldier experiences abnormal health conditions, injury, or becomes isolated from the unit, the control center can

immediately identify the issue and initiate rescue or medical assistance. This rapid response capability improves survival rates and strengthens mission success.

The system is particularly beneficial in remote or inaccessible areas such as dense forests, deserts, mountainous terrains, border regions, and underground environments where conventional communication networks are either weak or unavailable. In such locations, traditional GSM or internet-based tracking systems may fail due to lack of network coverage.

However, the LoRa-based system operates independently of cellular infrastructure and supports long-range communication with minimal power consumption. This makes it highly suitable for extended military operations where reliability, durability, and energy efficiency are critical.

Beyond defense applications, the system can also be effectively utilized in disaster management and rescue operations. During natural disasters such as earthquakes, floods, landslides, or forest fires, rescue personnel are often deployed in dangerous and unstable environments. Continuous tracking of rescue teams and monitoring of their health parameters can greatly enhance coordination and safety. If a rescuer is trapped, injured, or exposed to hazardous conditions, the monitoring system can quickly transmit alerts to the command center, enabling faster response and improved rescue efficiency.

The system also finds significant application in industrial safety environments, particularly in hazardous workplaces such as chemical plants, oil refineries, mining sites, and construction zones. Workers in these industries are frequently exposed to toxic gases, extreme temperatures, and physically demanding conditions. Integrating wearable health and environmental monitoring devices with long-range wireless communication allows supervisors to track worker safety in real time.

In case of gas leakage, abnormal heart rate, or high temperature exposure, alerts can be generated instantly, preventing accidents and ensuring worker protection.

In addition, the system can be adapted for healthcare monitoring in remote or rural areas where access to hospitals and medical infrastructure is limited. Patients with

chronic conditions such as heart disease, respiratory disorders, or high-risk health profiles can be monitored continuously using wearable sensors. The collected data can be transmitted to healthcare providers for analysis and timely intervention. This approach supports telemedicine initiatives and improves access to healthcare services in underserved regions.

Furthermore, the technology can be extended to environmental monitoring applications, such as tracking air quality, temperature variations, and hazardous gas levels in sensitive ecosystems. Its long-range, low-power communication capability makes it suitable for large-scale environmental data collection without frequent battery replacement or network dependency.

Overall, the versatility of the LoRa-based Soldier Tracking and Health Monitoring System demonstrates its effectiveness beyond military use. Its ability to provide reliable, long-range, secure, and energy-efficient communication makes it a valuable solution for defense operations, disaster management, industrial safety, healthcare monitoring, and environmental applications.

1.6 ORGANIZATION OF THE REPORT

The project report is organized into the following chapters for better understanding and systematic presentation of the work carried out:

- **Chapter 1 – Introduction:** Provides an overview of LoRa technology, explains the need for soldier tracking and health monitoring, and it also outlines the objectives, and various applications of the project.

- **Chapter 2 – Literature Survey:** Presents a detailed study of existing research papers and related works on soldier tracking, wireless communication systems, and health monitoring technologies. It also highlights the gaps identified in previous studies that form the basis of this project.

- **Chapter 3 – Proposed System:** Describes the hardware and software components used in the project, including ESP32, LoRa modules, sensors, and

GPS. It also explains the methodology, working principle, and communication flow between the soldier node and the base station.

- **Chapter 4 – Results and Discussion:** Includes the results, hardware setup, and system testing observations. It demonstrates how data is transmitted and received between the soldier node and base station using LoRa communication.

- **Chapter 5 – Conclusion and Future Scope:** Summarizes the outcomes of the project, discusses its advantages, and provides insights into future enhancements, such as implementing a LoRa mesh network for multiple soldiers.

1.7 CONCLUSION

This chapter explained the need for real-time soldier tracking and health monitoring in defense applications. It highlighted the limitations of existing GSM-based systems and introduced LoRa as a reliable long-range, low-power alternative. The proposed system aims to monitor vital parameters and location.

CHAPTER 2

LITERATURE SURVEY

2.1 INTRODUCTION

The Literature Survey provides a comprehensive overview of previous research works and existing technologies related to soldier tracking, health monitoring systems, and LoRa-based wireless communication frameworks. It plays a crucial role in understanding the technological advancements achieved in this domain and identifying the gaps that still exist in current implementations.

By reviewing earlier studies, it becomes possible to evaluate the effectiveness, limitations, and practical challenges associated with conventional systems that relied on GSM, GPS, satellite communication, or internet-based platforms for data transmission.

Many early soldier tracking systems were primarily based on GPS modules integrated with GSM or GPRS communication units. While these systems provided basic real-time location tracking under normal network conditions, their performance was highly dependent on cellular coverage and internet availability. In remote or hostile environments, such infrastructure-based systems often failed to maintain reliable connectivity. Additionally, high power consumption and limited scalability were significant drawbacks. Through the literature survey, it becomes evident that although these approaches marked an important step toward automated monitoring, they were not fully suitable for large-scale or battlefield deployments.

Several research studies have also focused on wearable health monitoring systems capable of measuring physiological parameters such as heart rate, body temperature, and oxygen saturation. These systems demonstrated the feasibility of continuous health monitoring using embedded sensors and microcontrollers. However, many of them operated as standalone devices without efficient long-range wireless transmission capabilities. In most cases, the collected data was stored locally or transmitted through short-range communication technologies, which restricted their practical application in defense scenarios.

Recent advancements in wireless communication have introduced LoRa technology as a promising alternative for long-range and low-power data transmission. Various studies have implemented LoRa modules in IoT-based monitoring systems and demonstrated their ability to achieve stable communication over several kilometers while consuming minimal energy. Research findings indicate that LoRa outperforms traditional Wi-Fi and Bluetooth technologies in terms of coverage, power efficiency, and resistance to environmental interference. Some works have also explored the use of LoRa mesh networking to improve reliability and eliminate single points of failure in communication networks.

By analyzing these research contributions, the literature survey highlights both the achievements and the limitations of existing systems. While LoRa-based communication has shown strong potential for remote monitoring applications, limited research has focused specifically on integrating soldier localization, real-time health surveillance, secure data transmission, and mesh networking into a single unified wearable system. Furthermore, aspects such as scalability, energy optimization, and battlefield resilience require deeper investigation.

Therefore, the findings from this literature survey establish the foundation and justification for developing the proposed LoRa-based Soldier Localization and Health Surveillance System. The survey confirms the necessity of a secure, independent, low-power, and long-range communication solution that overcomes the limitations of earlier GSM and internet-dependent systems. By building upon prior research and addressing identified gaps, the proposed system aims to provide a more reliable and efficient monitoring framework tailored specifically for modern defense applications.

2.2 LITERATURE SURVEY

This literature survey focuses on the development of wireless communication systems designed to monitor soldiers' health conditions and track their location in real time. Over the past decade, rapid advancements in embedded systems, sensor technologies, and Internet of Things (IoT) frameworks have significantly transformed the way monitoring systems are designed for defense applications. Modern

microcontrollers, compact biomedical sensors, and energy-efficient wireless modules have enabled the creation of intelligent wearable devices capable of collecting and transmitting data autonomously. These innovations have opened new possibilities for real-time soldier tracking and health surveillance in dynamic battlefield environments.

Traditional systems primarily relied on GSM and GPS-based technologies to track soldier positions and transmit information to command centres. While GPS provided accurate location data, the transmission of this data typically depended on GSM or internet-based communication networks. Such systems were effective in areas with stable network coverage; however, they were severely limited in remote or hostile terrains where cellular connectivity was weak or unavailable. In addition, GSM-based systems consumed relatively high power during continuous communication, leading to reduced battery life in wearable applications. These limitations made conventional systems less practical for prolonged military missions in isolated regions.

To overcome these challenges, researchers have explored alternative wireless communication technologies capable of delivering long-range connectivity with minimal power consumption. Among these technologies, LoRa (Long Range) has emerged as a promising solution due to its ability to support secure, low-data-rate transmission over several kilometres without requiring internet connectivity. Unlike conventional communication methods, LoRa operates in unlicensed ISM frequency bands and utilizes Chirp Spread Spectrum modulation, which enhances signal robustness and resistance to interference. This makes it highly suitable for deployment in dense forests, mountainous regions, and other challenging terrains where traditional networks may fail.

Several studies have demonstrated the effectiveness of LoRa in establishing reliable communication links between multiple nodes in point-to-point, star, or mesh network configurations. The ability of LoRa to function independently of public network infrastructure ensures continuous data transmission even in remote areas. Researchers have also investigated the integration of LoRa modules with biomedical and environmental sensors to develop comprehensive monitoring systems. By

combining temperature sensors, pulse sensors, gas sensors, and motion sensors with LoRa communication, these systems enable continuous health and environmental monitoring of soldiers in real time.

The integration of LoRa technology with embedded microcontrollers such as ESP32 or Arduino platforms has further enhanced system efficiency and flexibility. These integrated solutions allow real-time data acquisition, processing, and wireless transmission while maintaining low energy consumption. As a result, modern LoRa-based systems are capable of operating for extended durations on battery power, making them highly suitable for wearable military devices.

Overall, the developments highlighted in this literature survey indicate significant progress toward creating efficient, reliable, and energy-conscious monitoring systems for defence applications. The combination of long-range wireless communication and real-time health monitoring enhances soldier safety, improves situational awareness, and ensures seamless coordination between field units and base stations, even in challenging and infrastructure-limited environments. These research findings provide strong motivation for the development of an advanced LoRa-based Soldier Localization and Health Surveillance System that addresses the limitations of earlier technologies while leveraging the strengths of modern embedded and IoT solutions.

2.3 BASE PAPER SURVEY

[1] Victor Mora, Enrique Guzman, David Ruete, Jairo R. Coronado-Hernandez, & Gustavo Gatica. (2021). Cardio Monitoring and Geolocation Control System for Guards of the Armed Forces with LoRa Technology.

This paper presents a LoRa-based monitoring system designed for military personnel, enabling real-time tracking of health parameters and location data. The system operates independently of cellular or internet connectivity, ensuring reliable communication in remote and critical environments. By integrating LoRa modules with sensors and GPS,

the researchers achieved long-range data transmission with minimal power consumption. The results confirm the effectiveness of LoRa technology in developing secure, energy-efficient, and robust communication systems suitable for defense operations. The present project builds upon this concept by implementing a similar LoRa-based setup using an ESP32 microcontroller for continuous soldier health and location monitoring.

[2] P. Kanak raja, S.V. Aswinkumar, B. Jaya Krishna, K. Sri Hari, & V. Mani Krishna. (2021). Communication Through Blackspot Areas Using LoRa Technology.

This research focuses on establishing reliable communication in blackspot zones such as forests, islands, and hilly regions where conventional mobile networks are unavailable. The authors implemented a point-to-point LoRa communication system capable of transmitting data and messages across several kilometers. Their findings demonstrate that LoRa provides stable and interference-free connectivity in difficult terrains while consuming very low power.

This study directly supports the current project's objective of ensuring dependable soldier communication and health data transmission without relying on external network infrastructure.

[3] Y. Li, Z. Cheng, & X. Liu. (2023). A Novel Long-Range Communication System Using LoRa Technology for Remote Monitoring Applications.

This paper investigates the development of a long-range wireless communication system based on LoRa for remote data collection and monitoring. The research analyzes key parameters such as signal strength, range performance, and transmission reliability under varying environmental conditions. Experimental results show that LoRa achieves superior coverage and energy efficiency compared to traditional RF communication systems. Building upon these insights, the present project utilizes LoRa modules to establish a power-efficient communication link between the soldier node and the base

station, ensuring stable real-time monitoring of vital parameters even in remote or inaccessible areas.

2.4 RELATED WORK

[5] T. V. Rao, A. S. Rao, and K. Srinivasan. (2020). "LoRa-Based Long Range Wireless Communication System for Remote Monitoring." 2020 IEEE International Conference on Electronics, Computing and Communication Technologies (CONECCT).

This paper presents a long-range wireless communication system using LoRa technology for transmitting sensor data over several kilometers. The study analyzes signal strength, range, and transmission efficiency, showing that LoRa achieves reliable communication in areas where GSM or Wi-Fi signals are unavailable, making it ideal for defense and environmental monitoring applications.

[6] A. R. Patel and M. S. Kumar. (2021). "Design and Implementation of a LoRa-Based Wireless Health Monitoring System." 2021 IEEE International Conference on Intelligent Technologies (CONIT).

This research describes a LoRa-based health monitoring system that uses embedded sensors to measure physiological parameters and transmits wirelessly to a central node. The system demonstrates the reliability of LoRa for transmitting biomedical data with minimal power consumption, aligning with the objectives of continuous soldier health tracking.

[7] K. C. Choudhary, N. Prasad, and R. Thirunavukkarasu. (2022). "LoRa-Based Communication Network for Remote Area Connectivity." 2022 IEEE International Conference on Communication and Signal Processing (ICCSP).

This paper focuses on using LoRa modules to create a communication network capable of maintaining connectivity in remote or rural areas. The authors demonstrate how LoRa

can be configured for point-to-point and star network topologies, ensuring reliable data exchange with low latency, which supports applications in military communication and remote field operations.

[8] V. Gupta and A. Kumar. (2021). "Performance Analysis of LoRa Transceivers for Long Distance Communication." 2021 IEEE International Conference on Advances in Computing, Communication, and Control (ICAC3).

This paper provides a detailed performance evaluation of LoRa transceiver modules under varying environmental and terrain conditions. The study highlights LoRa's ability to maintain stable data transmission at distances up to 15 kilometers while consuming very little power. These findings validate the feasibility of using LoRa for soldier tracking applications where long-range communication is essential.

2.5 CONCLUSION

This chapter reviewed various research works related to soldier tracking, health monitoring, and LoRa-based wireless communication. From the analysis, it is evident that LoRa technology provides a reliable, long-range, and low-power alternative to conventional systems. The existing studies highlight its potential for defense applications requiring continuous monitoring in remote areas. The insights gained from this survey serve as the foundation for designing and developing the proposed LoRa-based soldier tracking and health monitoring system.

CHAPTER 3

PROPOSED SYSTEM

3.1 INTRODUCTION

The Proposed System introduces a reliable, secure, and energy-efficient solution for real-time soldier tracking and health monitoring using LoRa (Long Range) wireless communication technology. The primary goal of this system is to establish uninterrupted communication between soldiers deployed in the field and the command center, even in remote or hostile environments where conventional GSM or internet-based systems fail. Unlike traditional communication methods that depend on public network infrastructure, the proposed system operates independently, ensuring consistent data transmission regardless of terrain or network availability.

The design focuses on overcoming the key limitations of existing systems, such as network dependency, high power consumption, limited communication range, and lack of real-time health data transmission. By integrating LoRa technology with embedded sensing and processing units, the system provides a long-range, low-power communication framework suitable for battlefield conditions. LoRa's ability to transmit small packets of data over several kilometers while consuming minimal energy makes it ideal for wearable defense applications.

The proposed architecture consists of two main units: the Soldier Node (Transmitter) and the Base Station (Receiver). The soldier node is a wearable unit equipped with sensors and a microcontroller that continuously monitors physiological and positional data. It collects vital parameters such as heart rate and body temperature, along with real-time GPS location coordinates. These sensor readings are processed locally and then transmitted wirelessly using the LoRa module. The base station, which functions as the receiver, continuously listens for incoming LoRa packets and displays the received data for monitoring and analysis.

The system is designed to support long-distance data transmission with minimal power consumption, ensuring extended operational time during missions. Efficient power management strategies and optimized transmission intervals further enhance battery life, making the device suitable for prolonged field deployment. The communication link is structured to maintain stable connectivity even in environments with signal obstructions or environmental interference.

This chapter explains in detail the hardware components used in the system, including the microcontroller, sensors, LoRa transceiver, and display modules. It also discusses the software environment, programming methodology, communication protocol, and data transmission process. Additionally, the working principle of both the transmitter and receiver units is described, outlining how sensor data is collected, processed, transmitted, received, and displayed in real time.

Overall, the proposed LoRa-based communication setup provides a robust and scalable solution tailored for modern defense applications. By combining wearable sensing technology with long-range wireless communication, the system ensures continuous monitoring, improved situational awareness, and enhanced operational safety for soldiers deployed in challenging environments.

3.2 PROPOSED SYSTEM

The proposed system, titled **"**A Resilient LoRa Mesh for Soldier Localization and Health Surveillance**,"** is designed to establish a reliable, long-range wireless communication link between a soldier node (transmitter) and a base station (receiver) using LoRa (Long Range) technology. The primary objective of this system is to ensure uninterrupted monitoring of soldiers deployed in remote, high-risk, or communication-restricted environments. By leveraging LoRa's low-power and long-range capabilities, the system overcomes the major limitations of traditional GSM, Wi-Fi, and internet-dependent solutions, which often fail in battlefield or isolated terrains due to network unavailability or excessive power consumption.

The system enables real-time tracking of the soldier's geographical position along with continuous monitoring of critical physiological and environmental parameters.

These include heart rate, body temperature, environmental gas concentration, and motion status. Continuous monitoring ensures that any abnormal variation in the soldier's health condition can be detected promptly. In case of emergencies such as abnormal heart rate, excessive body temperature, exposure to harmful gases, or sudden falls, the transmitted data allows the command center to initiate rapid response measures. Since the system operates independently of internet connectivity, it guarantees secure and uninterrupted data transmission under all operational conditions, making it highly suitable for defense applications.

The soldier node is implemented as a compact and wearable unit designed for portability and minimal interference with the soldier's movement. It comprises an ESP32 microcontroller, which acts as the core processing unit, interfaced with a LoRa RA-02 transceiver module for wireless communication. The ESP32 is responsible for collecting data from multiple sensors, processing the readings, and managing the transmission process. The node also includes a GPS module for real-time location tracking and several biomedical and environmental sensors such as a pulse sensor for heart rate monitoring, a DS18B20 temperature sensor for measuring body temperature, an MQ135 gas sensor for detecting hazardous gases, and an MPU6050 accelerometer for monitoring motion and orientation.

Each sensor continuously gathers relevant data related to the soldier's health and surrounding conditions. The ESP32 reads these sensor values through analog or digital interfaces, performs basic filtering and formatting, and organizes the information into structured data packets. These packets include health parameters along with GPS coordinates and node identification details. Once formatted, the data is transmitted through the LoRa module to the base station at predefined time intervals. The periodic transmission mechanism ensures real-time monitoring while maintaining low power consumption.

The GPS module continuously updates latitude and longitude coordinates, which are appended to the health data before transmission. This integration of positional and physiological information enables comprehensive monitoring at the command center.

Special attention is given to system design considerations such as size, weight, and power efficiency. The entire soldier node is engineered to be lightweight and portable, allowing it to be integrated into a wearable form factor without causing discomfort. Low-power components and optimized transmission intervals help extend battery life, enabling the system to operate for extended durations during field missions.

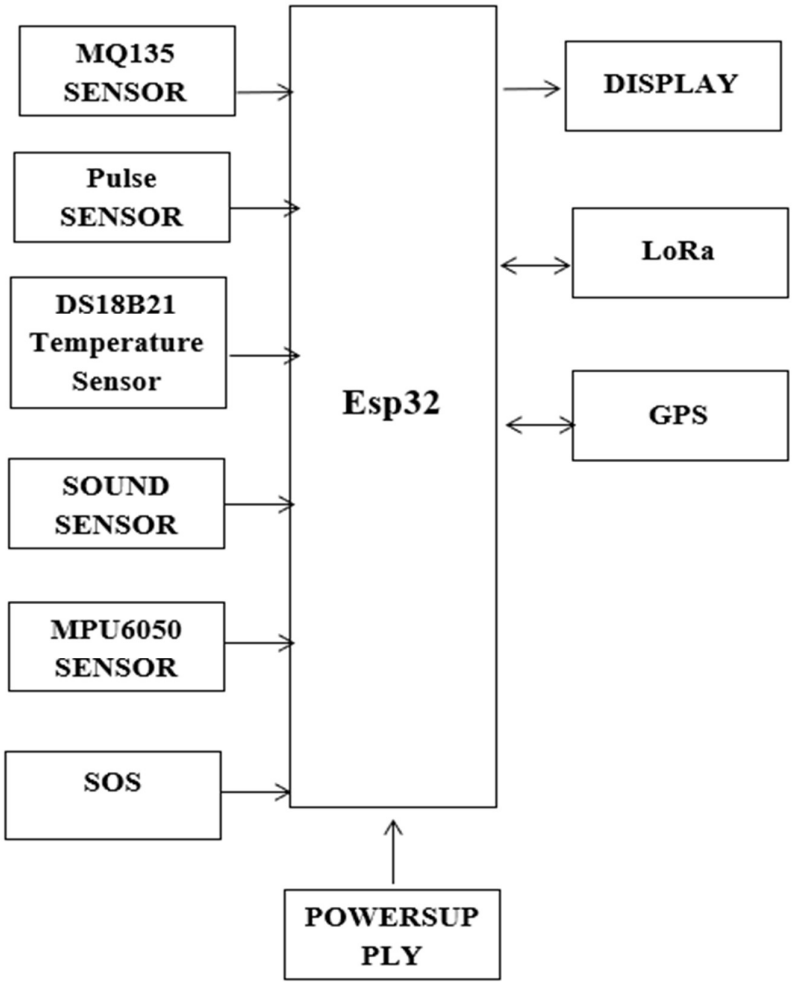

FIGURE 3.1 – SOLDIER NODE (TRANSMITTER UNIT)

As illustrated in Fig. 3.1, the soldier node integrates sensing, processing, and communication modules into a unified platform, forming the transmitter unit of the proposed LoRa-based monitoring system.

The base station, which functions as the receiver unit of the system, consists of an ESP32 microcontroller interfaced with a LoRa transceiver module and a monitoring or display interface. It serves as the central control point where all transmitted data from the soldier node is received, processed, and analyzed. The ESP32 at the base station is programmed to continuously listen for incoming LoRa packets within the configured frequency band and spreading factor. This constant listening mode ensures that real-time updates from the soldier node are captured without delay.

Upon receiving the transmitted data packet, the LoRa module forwards the information to the ESP32 microcontroller for decoding and processing. The data packet typically contains the soldier's heart rate, body temperature, gas concentration level, motion status, and GPS coordinates. The ESP32 extracts these values, verifies packet integrity, and converts them into readable format for display. The processed information can then be visualized on a serial monitor, 16×2 LCD display, or connected computer interface for detailed monitoring and record keeping by the control unit.

The base station plays a crucial role in continuous surveillance and decision-making. By providing real-time visualization of the soldier's health and positional data, it enhances situational awareness at the command center. The monitoring interface allows authorized personnel to track multiple parameters simultaneously and assess field conditions efficiently. The system can also be configured to log received data for future analysis, enabling performance evaluation and mission documentation.

An important feature of the base station is its alert mechanism. The system is programmed with predefined safety thresholds for critical parameters such as pulse rate, body temperature, and gas concentration. If any received value exceeds or falls below the normal safe range, the ESP32 immediately activates an alert system. This alert may include a buzzer, LED indicator, or visual warning on the display screen. Such immediate notifications ensure that the command center is instantly informed of potential emergencies, including health deterioration, hazardous environmental exposure, or abnormal movement patterns.

This rapid alert mechanism significantly reduces response time in critical situations. For example, if a soldier's pulse rate drops suddenly or a toxic gas level is detected in the environment, the command center can quickly initiate rescue operations or provide medical assistance. The ability to generate automatic alerts without manual supervision enhances reliability and operational efficiency.

Additionally, the base station can be expanded to integrate with advanced monitoring platforms such as cloud dashboards or data analytics systems in future enhancements. This would allow centralized monitoring of multiple soldier nodes simultaneously. As illustrated in Fig. 3.2, the base station architecture demonstrates how incoming LoRa data is received, processed, displayed, and used to generate alerts, forming the core monitoring unit of the proposed system.

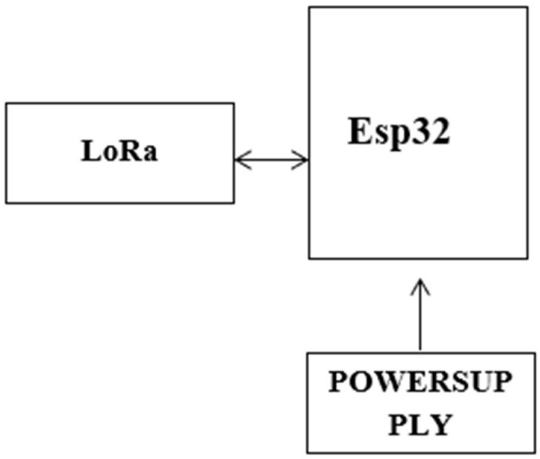

Figure 3.2 BASE STATION

The proposed system makes use of LoRa's long-range and low-power communication capabilities to achieve seamless and reliable connectivity between the soldier node and the base station. One of the major advantages of LoRa technology is its operation in the unlicensed Industrial, Scientific, and Medical (ISM) frequency bands, which eliminates the need for expensive communication infrastructure, spectrum licensing, or dependency on commercial service providers. This independence from external infrastructure makes the system highly suitable for defense environments where secure and self-contained communication is essential.

LoRa employs Chirp Spread Spectrum (CSS) modulation, which enhances receiver sensitivity and enables signals to be detected even when they are below the noise floor. This characteristic significantly improves communication reliability in challenging environments. As a result, stable data transmission can be maintained over several kilometers, even in areas with physical obstructions or environmental interference. Dense forests, mountainous terrains, deserts, and extreme weather conditions such as heavy rain or fog typically degrade conventional wireless signals.

However, the robust modulation scheme used in LoRa ensures better resistance to multipath fading, interference, and signal attenuation, thereby maintaining consistent communication performance.

Another important advantage of LoRa is its low data rate communication model, which is optimized for transmitting small packets of sensor data at periodic intervals. Since the system primarily transmits health parameters and GPS coordinates, high data rates are not required. The efficient transmission mechanism reduces power consumption significantly, enabling the wearable soldier node to operate for extended durations using a compact battery source. This low-power characteristic is especially critical for military applications, where frequent battery replacement or charging may not be feasible during long missions.

In addition to providing reliable point-to-point communication between a single soldier node and the base station, the system architecture is designed with scalability in mind. The proposed setup allows flexibility for future expansion into a multi-node network configuration. Additional soldier units can be integrated into the network without major modifications to the existing system. Depending on operational requirements, the communication framework can be extended to support star topology, where multiple soldier nodes communicate directly with a central base station, or mesh topology, where nodes can relay information through intermediate units.

In a mesh configuration, each node can be programmed to act not only as a transmitter but also as a relay point for nearby nodes. This approach increases communication range and improves network resilience. If direct communication

between a soldier node and the base station is temporarily obstructed, data can be routed through neighboring nodes, ensuring continuous connectivity. Such adaptability enhances system reliability in complex battlefield conditions.

Furthermore, in subsequent development phases, the system can be strengthened by incorporating data encryption techniques and acknowledgment packet mechanisms. Encryption ensures that transmitted health and location data remain confidential and protected from unauthorized access. Acknowledgment packets can be used to confirm successful data reception, improving communication reliability and reducing packet loss. These enhancements would further increase system security, robustness, and suitability for defense applications.

Overall, the proposed LoRa-based system combines long-range communication, low power consumption, scalability, and adaptability to provide an efficient and resilient monitoring solution for modern military operations.

3.4 HARDWARE REQUIRED

3.4.1 ESP-32 MICROCONTROLLER

The board is powered by an ESP32-S SoC from Espressif, a powerful, programmable MCU with out-of-the-box WIFI and Bluetooth. It's the cheapest (around $7) ESP32 dev board that offers an onboard camera module, MicroSD card support, and 4MB PSRAM at the same time. Adding an external Wi-Fi antenna for signal boosting requires extra soldering work as shown in Fig. 3.3

The board does not have a conventional USB port, you will have to use either an FTDI programmer, or an add-on HAT, or an Arduino UNO along with the Arduino IDE/ESP-IDF DEV tools to upload codes to it.Being a low-cost board in a small enough form factor has made it extremely popular for many IoT and machine vision applications.

- Onboard ESP32-S module, supports Wi-Fi + Bluetooth
- OV2640 camera with flash
- Onboard TF card slot, supports up to 4G TF card for data storage

- Supports Wi-Fi video monitoring and Wi-Fi image upload
- Supports multi sleep modes, deep sleep current as low as 6mA
- Control interface is accessible via pin header, easy to be integrated and embedded into user products

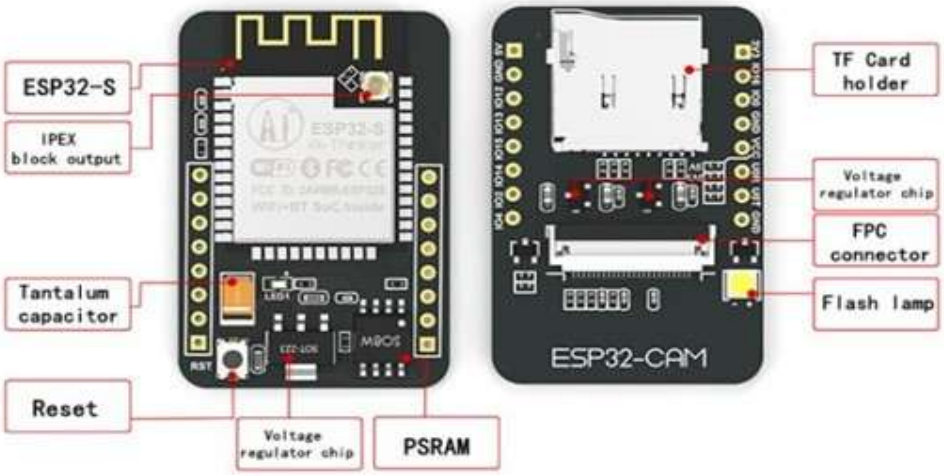

Figure 3.3 ESP32 MICROCONTROLLER

3.4.2 LORA MODULE

LoRa is a 'Long Range' low power wireless standard intended for providing a cellular style low data rate communications network. The radio interface has been designed to enable extremely low signal levels to be received, and as a result even low power transmissions can be received at significant ranges as shown in Fig. 3.4.

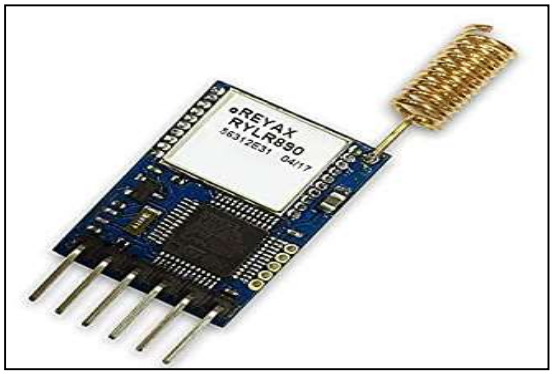

Figure 3.4 LORA MODULE

The LoRa modulation and radio interface has been designed and optimized to provide exactly the type of communications needed for remote IoT and M2M nodes.

There are several key elements of LoRa technology. Some of its key features include the following:

- Long range: 15 - 20 km.
- Millions of nodes
- Long battery life: in excess of ten years

3.4.3 GPS MODULE

The NEO-6MV2 is a GPS (Global Positioning System) module and is used for navigation. The module simply checks its location on earth and provides output data which is longitude and latitude of its position. It is from a family of stand-alone GPS receivers featuring the high-performance u-block 6 positioning engine.

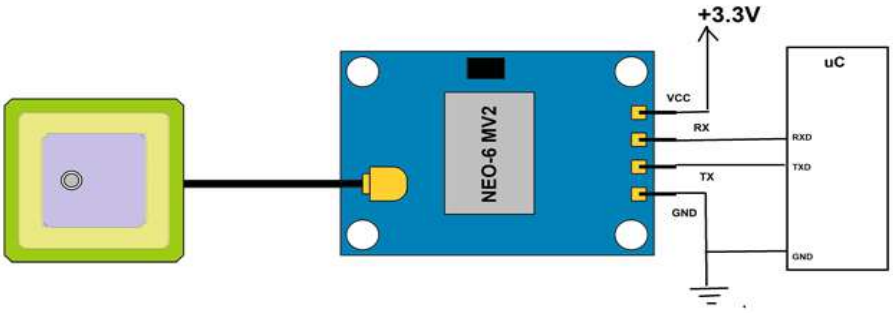

Figure 3.5 GPS MODULE

These flexible and cost-effective receivers offer numerous connectivity options in a miniature (16 x 12.2 x 2.4 mm) package as shown in Fig. 3.5. The compact architecture, power and memory options make NEO-6 modules ideal for battery operated mobile devices with very strict cost and space constraints. Its Innovative design gives NEO-6MV2 excellent navigation performance even in the most challenging environments.

3.4.4 PULSE SENSOR

Pulse Sensor is a well-designed plug-and-play heart-rate sensor for Arduino. It can be used by students, artists, athletes, makers, and game & mobile developers who want to easily incorporate live heartrate data into their projects as shown in 3.6. The sensor clips onto a fingertip or earlobe and plugs right into Arduino. It also includes an open-source monitoring app that graphs your pulse in real time.

Figure 3.6 PULSE SENSOR

3.4.5 TEMPERATURE SENSOR

DS18B20 is 1-Wire interface Temperature sensor manufactured by Dallas Semiconductor Corp. The unique 1-Wire Interface requires only one digital pin for two-way communication with a microcontroller.

The sensor comes usually in two form factors. One that comes in TO-92 package looks exactly like an ordinary transistor. Other one in a waterproof probe style which can be more useful when you need to measure something far away, underwater or under the ground.

The DS18B20 consists of a temperature-sensing element, an internal analog-to-digital converter (ADC), and a non-volatile memory section that stores calibration and

configuration data. It is powered by a 3.0V to 5.5V supply and can also operate in parasite power mode, drawing power directly from the data line.

The DS18B20 communicates over a 1-Wire bus that requires only one data line (and ground) for communication with Arduino. It has an operating temperature range of -55°C to +125°C and is accurate to ±0.5°C over the range of -10°C to +85°C. In addition, the DS18B20 can derive power directly from the data line ("parasite power"), eliminating the need for an external power supply shown in Fig. 3.7.

Figure 3.7 TEMPERATURE SENSOR

Each DS18B20 has a unique 64-bit serial code, which allows multiple DS18B20s to function on the same 1-Wire bus. Thus, it is simple to use one microprocessor to control many DS18B20s distributed over a large area. Applications that can benefit from this feature include HVAC environmental controls, temperature monitoring systems inside buildings, equipment, or machinery, and process monitoring and control systems.

The resolution of the temperature sensor is user-configurable to 9, 10, 11, or 12 bits. However, the default resolution at power-up is 12-bit (i.e. 0.0625°C precision).

3.4.6 SOUND SENSOR

The sound sensor is one type of module used to notice the sound. Generally, this module is used to detect the intensity of sound. The applications of this module mainly include switch, security, as well as monitoring. The accuracy of this sensor can be changed for ease of usage.

This sensor employs a microphone to provide input to buffer, peak detector and an amplifier. This sensor notices a sound, & processes an o/p voltage signal to a microcontroller. After that, it executes required processing.

Figure 3.8 SOUND SENSOR

This sensor is capable to determine noise levels within DB's or decibels at 3 kHz 6 kHz frequencies approximately wherever the human ear is sensitive. In smartphones, there is an android application namely decibel meter used to measure the sound level shown in Fig.3.8.

3.4.7 ACCELEROMETER

This is a breakout board for Freescale's MMA7361L three-axis analog MEMS accelerometer. The sensor requires a very low amount of power and has a g-select input which switches the accelerometer between ±1.5g and ±6g measurement ranges. Other features include sleep mode, signal conditioning, a 1-pole low pass filter, temperature compensation, self-test, and 0g-detect which detects linear freefall. Zero-g offset and sensitivity are factory set and require no external devices.

This breadboard friendly board breaks out every pin of the MMA7361L to a 9-pin, 0.1" pitch header. The sensor works on power between 2.2 and 3.6VDC (3.3V optimal), and typically consumes just 400µA of current. All three axes have their own analog output.

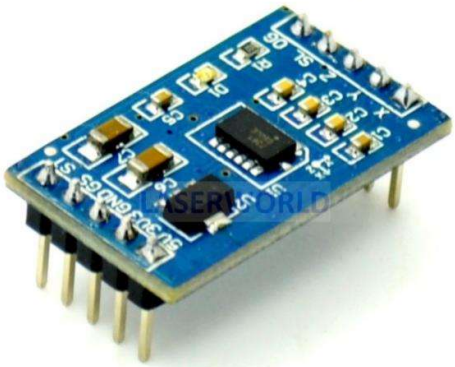

Figure 3.9 ACCELEROMETER

3.4.8 LCD MODULE

LCD (Liquid Crystal Display) is a type of flat panel display which uses liquid crystals in its primary form of operation. LCD draws its definition from its name itself. It is combination of two states of matter, the solid and the liquid. LCD uses a liquid crystal to produce a visible image.

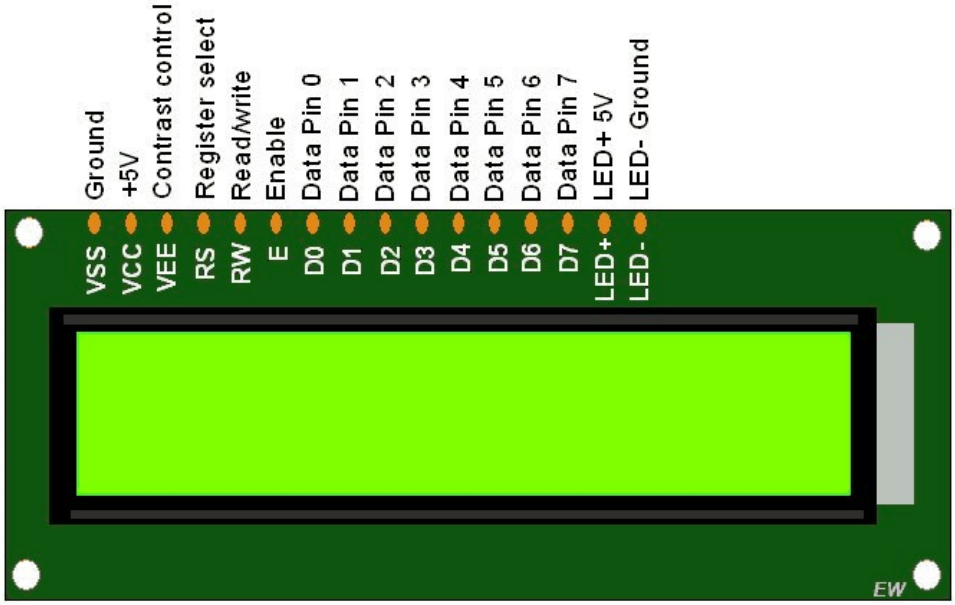

Figure 3.10 LCD MODULE

LCD's technologies allow displays to be much thinner when compared to cathode ray tube (CRT) technology. They consume very little power, making them suitable for

battery-operated devices such as soldier tracking units. In this project, the LCD is used to display the soldier's health parameters and location data received from the sensors and GPS module.

The Liquid Crystal Display (LCD) is one of the most widely used display devices in embedded systems. In this project, a 16×2 LCD module is used to display real-time data such as the soldier's heart rate, body temperature, gas concentration, and location coordinates. The LCD operates on the principle of liquid crystal polarization, where an electric field controls the alignment of liquid crystal molecules to either block or allow light to pass through, forming visible characters on the screen.

It is a low-power display device, making it suitable for portable, battery-operated systems like the soldier tracking unit. The command register is used to send instructions such as cursor movement, screen clearing, or display settings, while the data register holds the actual characters to be shown on the screen as shown in Fig.3.10.

3.5 SOFTWARE REQUIREMENT

The software requirements for this project primarily include tools and programming environments necessary to develop, compile, and upload the code to the microcontroller for proper system operation. The main software used is the Arduino Integrated Development Environment (Arduino IDE), which provides a user-friendly platform for writing and uploading programs to the ESP32 microcontroller. It supports embedded C and C++ programming languages and allows easy integration of various libraries required for interfacing sensors and communication modules such as LoRa, GPS, and LCD. The Arduino IDE also provides a built-in serial monitor that enables real-time observation of transmitted and received data between the soldier node and the base station.

Additionally, simulation tools like Proteus Design Suite can be used for circuit simulation and testing before hardware implementation, ensuring that all components function as expected. The programming logic is designed using Embedded C, which efficiently controls data acquisition, transmission, and display processes. The software ensures smooth communication between the transmitter and receiver nodes by

continuously reading sensor values, processing data, and sending it through the LoRa transceiver. Overall, the software tools used in this project provide a reliable environment for program development, testing, and debugging, ensuring accurate and stable operation of the complete soldier tracking and health monitoring system.

3.5.1 ARDUINO IDE

The Arduino Integrated Development Environment (Arduino IDE) is the primary software platform used in this project for programming and uploading code to the ESP32 microcontroller. It provides a simple and user-friendly interface for writing, compiling, and debugging embedded C or C++ programs. The IDE is compatible with a wide range of microcontrollers such as Arduino Uno, ESP8266, and ESP32, making it ideal for developing IoT and embedded systems. In this project, the Arduino IDE is used to write the program that reads sensor values from different modules such as the pulse sensor, temperature sensor (DS18B20), gas sensor (MQ135), MPU6050 accelerometer, and GPS module, processes the data, and transmits it wirelessly through the LoRa module to the base station.

The Arduino IDE consists of two main sections: the text editor and the output console. The text editor is used to write and modify code, while the output console displays compilation results, error messages, and upload status. It also includes a built-in serial monitor that allows real-time communication between the microcontroller and the computer. This feature is particularly useful in this project to verify the data being transmitted from the soldier node and received at the base station. The IDE uses a compiler based on avr-gcc for compiling source code and converting it into a machine-readable format that can be uploaded to the microcontroller's flash memory. The uploaded code enables the ESP32 to perform tasks such as reading analog and digital sensor inputs, processing data, and handling serial communication with peripheral modules.

The Arduino library manager simplifies the integration of multiple sensors and modules by providing pre-built libraries for LoRa, GPS, LCD, and other devices used in the project. These libraries contain predefined functions that make coding easier and

reduce development time. For example, the LoRa library provides functions to initialize the module, set frequencies, and transmit or receive packets efficiently. Similarly, the GPS library helps in reading and parsing location coordinates directly from the GPS module. The Wire and SPI libraries are used to enable communication between the microcontroller and external modules via I²C and SPI protocols.

Figure 3.11 ARDUINO IDE

Overall, the Arduino IDE serves as the core software tool that connects the hardware and programming aspects of this project. It provides a stable environment for developing and uploading code to the ESP32, ensuring reliable control and communication between the soldier node and the base station as shown in Fig.3.11. Its simplicity, flexibility, and vast library support make it an ideal platform for embedded system development, contributing significantly to the success and functionality of the LoRa-based Soldier Tracking and Health Monitoring System.

3.5.2 EMBEDDED C

Embedded C programming is used in this project to control the operation of the ESP32 microcontroller and manage communication between various sensors and modules. It forms the backbone of the system's functionality, handling data acquisition, processing, and transmission tasks efficiently.

The program written in Embedded C reads analog and digital inputs from sensors such as the pulse sensor, temperature sensor (DS18B20), gas sensor (MQ135), and MPU6050 motion sensor, processes the data, and sends it to the LoRa transceiver for wireless transmission to the base station. It also controls the LCD display, updating real-time values of the soldier's health parameters and GPS location as shown in Fig. 3.12.

lora_phase1 | Arduino 1.8.19

File Edit Sketch Tools Help

lora_phase1

```
#include <Wire.h>
#include <OneWire.h>
#include <LiquidCrystal_I2C.h>
#include <DallasTemperature.h>
#include <MPU6050.h>
#include <TinyGPSPlus.h>

// Pin definitions
#define RESPIRATION_SENSOR_PIN 27
#define ONE_WIRE_BUS_PIN 15

#define PULSE_SENSOR_PIN 32
int heartRate = 0, pulseValue;

#define MQ_PIN 34  // MQ135 or MQ2 gas sensor
#define RXD1 17    // GPS RX -> ESP32 TX
#define TXD1 16    // GPS TX -> ESP32 RX

// LCD & Sensors
LiquidCrystal_I2C lcd(0x27, 16, 2);
OneWire oneWire(ONE_WIRE_BUS_PIN);
```

Figure 3.12 EMBEDDED C PROGRAMMING

Embedded C provides direct access to hardware components and allows precise timing control, which is crucial for accurate sensor readings and reliable communication.

The code is structured using functions such as setup () for initialization and loop () for continuous execution, ensuring smooth system operation. Its flexibility, portability, and efficiency make Embedded C the most suitable programming language for microcontroller-based applications like this soldier tracking and health monitoring system.

3.6 METHODOLOGY

The methodology adopted for this project focuses on designing and implementing a reliable and energy-efficient communication system between a soldier node (transmitter) and a base station (receiver) using LoRa technology. The primary objective is to continuously monitor the soldier's vital health parameters and geographical location in real time and transmit this information over long distances with minimal power consumption. The methodology emphasizes system reliability, low energy usage, continuous monitoring, and stable wireless communication in remote environments.

The overall operation of the system is divided into two major functional units: the transmitter section and the receiver section. The transmitter unit, referred to as the soldier node, is mounted on the soldier as a wearable device. The receiver unit, referred to as the base station, is positioned at the command center. Both units are built around the ESP32 microcontroller, which serves as the central processing and control unit. The ESP32 coordinates sensor data acquisition, performs basic signal processing, manages data formatting, and handles LoRa communication through serial interfaces.

The soldier node functions as the data acquisition and transmission unit. It continuously senses physiological and environmental parameters using integrated sensors. The DS18B20 temperature sensor measures the soldier's body temperature with high accuracy, while the pulse sensor detects heart rate variations by monitoring blood flow changes. The MQ135 gas sensor is used to detect harmful gases or poor air quality in the surroundings, providing environmental safety information. Additionally, the MPU6050 accelerometer monitors motion, orientation, and sudden impacts, which may indicate falls or abnormal movement conditions. A GPS module is incorporated to obtain real-time latitude and longitude coordinates, enabling precise tracking of the soldier's position.

The ESP32 microcontroller reads both analog and digital sensor outputs through its input pins. Analog signals are converted into digital values using the built-in Analog-to-Digital Converter (ADC). The microcontroller processes the collected data, performs

necessary calibration or filtering if required, and organizes the information into a structured data packet. This packet typically contains sensor readings along with the GPS coordinates and node identification details. The data is transmitted at predefined time intervals to ensure periodic updates while conserving battery power.

The LoRa RA-02 transceiver module is responsible for wireless communication between the soldier node and the base station. It operates in the unlicensed ISM frequency band and utilizes chirp spread spectrum modulation, which enhances signal robustness and communication range. The spreading factor, bandwidth, and transmission power are configured within the LoRa library in the program code to optimize performance based on operational requirements. Higher spreading factors increase communication range and reliability, while lower factors improve transmission speed and reduce airtime. These configurable parameters allow the system to balance range, data rate, and power consumption effectively.

Power for the soldier node is supplied through a rechargeable battery pack designed to support long-duration operation. Since LoRa technology consumes very low power during transmission and standby modes, the overall system achieves extended battery life. The compact arrangement of components ensures that the device remains lightweight and portable, minimizing any physical burden on the soldier. Careful hardware layout and efficient power management strategies contribute to stable and continuous system operation during field missions.

An LCD display is connected to the ESP32 at the soldier node to provide local visualization of sensor readings. This allows the soldier to monitor basic health information such as pulse rate and temperature in real time. The display also serves as a debugging and verification interface during system testing.

Overall, the methodology integrates sensing, processing, and communication into a unified wearable platform. The transmitter unit collects and transmits critical data, while the LoRa module ensures reliable long-range communication. The combination of ESP32 microcontroller capabilities and LoRa wireless transmission forms the

foundation of a robust, energy-efficient, and real-time monitoring system suitable for defense applications.

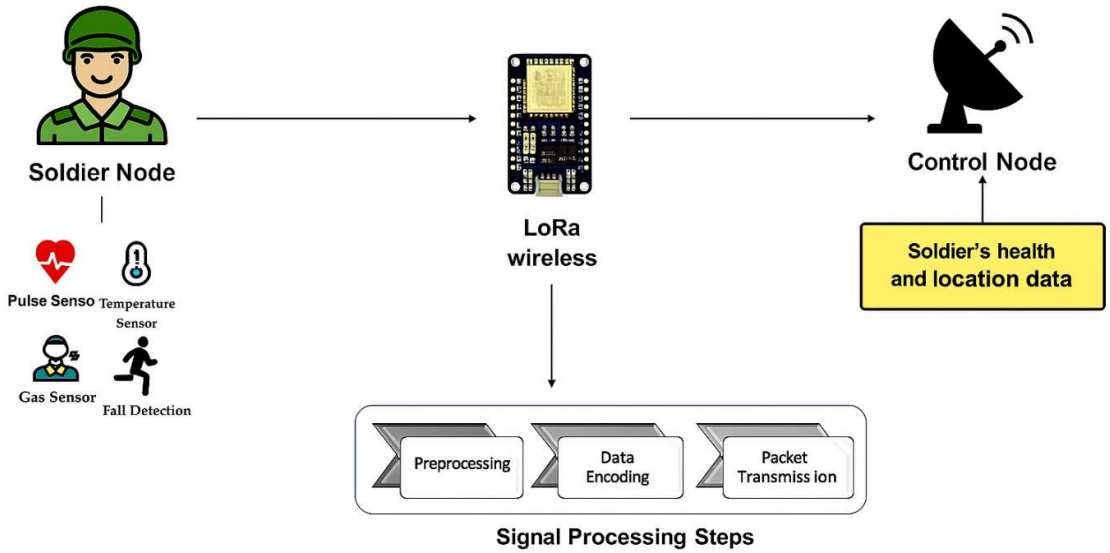

Figure 3.13 FLOW DIAGRAM

The base station serves as the receiver unit of the proposed system and is equipped with an ESP32 microcontroller interfaced with a LoRa RA-02 module and a display interface, as shown in Fig. 3.13. It functions as the central monitoring hub at the command center, responsible for receiving, decoding, and displaying the data packets transmitted by the soldier node. The ESP32 microcontroller at the base station is programmed to continuously operate in receive mode, listening for LoRa signals configured at the same frequency, bandwidth, and spreading factor as the transmitter. This synchronization ensures reliable communication between the two units.

When a data packet is received through the LoRa module, it is passed to the ESP32 for processing. The microcontroller verifies the integrity of the received data by checking packet structure and formatting to ensure that the transmission was successful and free from corruption. Once verified, the extracted parameters—including heart rate,

body temperature, gas concentration, accelerometer data, and GPS coordinates—are converted into readable values. These readings are then displayed on the serial monitor or LCD screen connected to the base station for continuous observation by the monitoring personnel.

The display interface allows the command center to monitor real-time updates of the soldier's health status and geographical location. Along with the sensor values, the system can also display the time of reception, providing a reference for data logging and monitoring continuity. This structured presentation of data enhances situational awareness and allows the control unit to make informed decisions based on live field information.

In critical situations, the base station is programmed to compare received sensor values against predefined safety thresholds. If abnormal conditions are detected—such as elevated body temperature, irregular pulse rate, excessive gas concentration, or unusual motion patterns—the system automatically activates an alert mechanism. This may include triggering a buzzer or illuminating a warning indicator to immediately notify monitoring personnel. Such real-time alerts significantly reduce response time during emergencies and enable quick medical or tactical intervention.

In the current Phase-I implementation, communication between the soldier node and the base station is unidirectional, meaning data flows only from the soldier to the command center. This simplified communication model ensures efficient real-time monitoring while maintaining low system complexity. However, the architecture is designed with scalability in mind. In future development phases, the system can be upgraded to support bi-directional communication, allowing the command center to send instructions or alerts back to the soldier. Additionally, a mesh network configuration could be implemented to extend coverage and improve network resilience by enabling data relay between multiple nodes.

The LoRa-based design ensures stable communication over several kilometers, even in environments where cellular or internet connectivity is unavailable. Since the system transmits small packets containing sensor readings and GPS coordinates, the low

data rate provided by LoRa is more than sufficient. At the same time, its low power consumption extends battery life, making the system suitable for prolonged field operations.

In summary, the adopted methodology emphasizes seamless integration of sensing components, microcontroller-based processing, and long-range wireless communication. The soldier node continuously collects and transmits health and positional data, while the base station receives and displays this information in real time. The combined advantages of ESP32 processing capability, LoRa's long-range communication performance, and efficient power utilization make the system robust, reliable, and scalable for defense applications. The project demonstrates the practical feasibility of implementing a LoRa-based solution for continuous soldier monitoring in areas where traditional communication infrastructure is either unreliable or completely unavailable, thereby enhancing operational safety and mission effectiveness.

3.6.1 TRANSMITTER (SOLDIER NODE)

The receiver section, also referred to as the base station, serves as the central monitoring unit of the proposed system. Its primary responsibility is to receive, process, and display the data transmitted from the soldier node in real time. The base station is designed to operate continuously at the command center, ensuring uninterrupted supervision of the soldier's health condition and geographical position during field operations.

The receiver unit is built around an ESP32 microcontroller interfaced with a LoRa RA-02 transceiver module. The LoRa module is configured with the same frequency, bandwidth, and spreading factor as the transmitter to ensure synchronized communication. It operates in continuous receive mode, constantly listening for incoming data packets sent by the soldier node. This persistent listening mechanism guarantees that no transmitted information is missed, thereby maintaining real-time monitoring capability.

When a LoRa packet is received, the transceiver forwards the data to the ESP32 microcontroller for decoding and processing. The received information typically

includes the soldier's heart rate, body temperature, environmental gas concentration, motion status from the accelerometer, and GPS coordinates indicating the soldier's exact location. The ESP32 extracts each parameter from the structured data packet and converts it into human-readable format.

The processed data is then displayed on a 16 X 2 LCD screen or through the serial monitor connected to a computer system. This real-time display enables monitoring personnel at the control unit to continuously observe the soldier's physiological status and movement. The structured presentation of values ensures easy interpretation and quick decision-making during mission-critical situations.

An essential feature of the base station is the implementation of threshold-based alert monitoring. The system is programmed with predefined safe limits for key parameters such as pulse rate, body temperature, and gas concentration. If any of these values exceed normal limits such as an abnormally high or low pulse rate, elevated temperature, or detection of toxic gases the ESP32 automatically activates a buzzer or visual alert indicator. This immediate alert mechanism ensures that monitoring personnel are promptly notified of potential emergencies, enabling rapid response and intervention.

The base station is designed to provide stable and long-range wireless communication using LoRa technology. Since LoRa operates independently of cellular or internet infrastructure, the system remains fully functional even in remote areas where mobile networks are unavailable.

Overall, the receiver section plays a critical role in transforming transmitted sensor data into actionable information. By combining LoRa-based communication, ESP32 processing capability, real-time display, and automated alert mechanisms, the base station ensures effective monitoring and improved situational awareness at the command center.

3.7 CONCLUSION

This section presented the various hardware components required for the successful implementation of the proposed system. Each component was carefully selected to

ensure accurate data acquisition, reliable long-range communication, and efficient power utilization. The ESP32 microcontroller serves as the central processing unit, coordinating sensor data collection, signal processing, and LoRa communication. Its multiple GPIO pins, built-in ADC, and efficient processing capability make it suitable for handling real-time monitoring tasks.

The LoRa RA-02 module plays a crucial role in establishing long-range wireless communication between the soldier node and the base station. Its low power consumption and strong resistance to interference ensure stable data transmission even in remote and challenging environments. The GPS module provides precise location tracking through latitude and longitude coordinates, enabling accurate monitoring of the soldier's position during missions.

The integrated sensors, including the pulse sensor, DS18B20 temperature sensor, MQ135 gas sensor, and MPU6050 accelerometer, are responsible for collecting vital physiological and environmental data. Each sensor contributes specific information necessary for assessing the soldier's health condition and surrounding environment. Together, they provide a comprehensive monitoring solution that enhances safety and situational awareness.

The selection of hardware components was based on key factors such as energy efficiency, compatibility with the ESP32 microcontroller, ease of integration, availability, and cost-effectiveness. Special emphasis was placed on low power consumption to ensure extended battery life for wearable operation in field conditions. Compact size and lightweight design were also considered to maintain portability and comfort for the soldier.

Collectively, these hardware elements form the structural and functional foundation of the LoRa-based Soldier Tracking and Health Monitoring System. Their seamless integration enables accurate sensing, efficient processing, and reliable long-range communication, thereby ensuring the overall effectiveness and practicality of the proposed system in defense applications.

CHAPTER 4

RESULTS AND DISSCUSSION

4.1 INTRODUCTION

This chapter presents the results obtained from the implementation and testing of the LoRa-Based Soldier Tracking and Health Monitoring System. The objective of this evaluation is to verify the system performance in terms of sensor accuracy, communication reliability, and real-time data transmission between the soldier node and the base station.

The system was tested by monitoring parameters such as heart rate, body temperature, gas levels, motion, and GPS location using sensors connected to the ESP32 microcontroller. The collected data was transmitted through the LoRa module to the base station, where it was received and displayed for monitoring. The results demonstrate that the system can provide stable communication, accurate sensor readings, and reliable real-time monitoring, confirming the suitability of LoRa technology for soldier tracking applications in remote environments.

4.2 RESULTS AND DISCUSSION

The LoRa-Based Soldier Tracking and Health Monitoring System is designed to continuously monitor a soldier's health condition and geographical location using an integrated combination of biomedical sensors, embedded processing, and long-range wireless communication. The system incorporates the DS18B20 temperature sensor, pulse sensor, MQ135 gas sensor, and MPU6050 accelerometer, all interfaced with the ESP32 microcontroller, as shown in Fig. 4.1.

These sensors collectively enable real-time measurement of physiological and environmental parameters, ensuring comprehensive monitoring during field operations.

The ESP32 microcontroller functions as the central controller of the system, responsible for data acquisition, signal processing, packet formation, and wireless transmission. Sensor readings are collected at predefined time intervals to ensure continuous

monitoring without unnecessary power consumption. The processed data, which includes temperature, heart rate, gas level, motion data, and GPS coordinates, is transmitted via the LoRa RA-02 module to the base station located at the control unit.

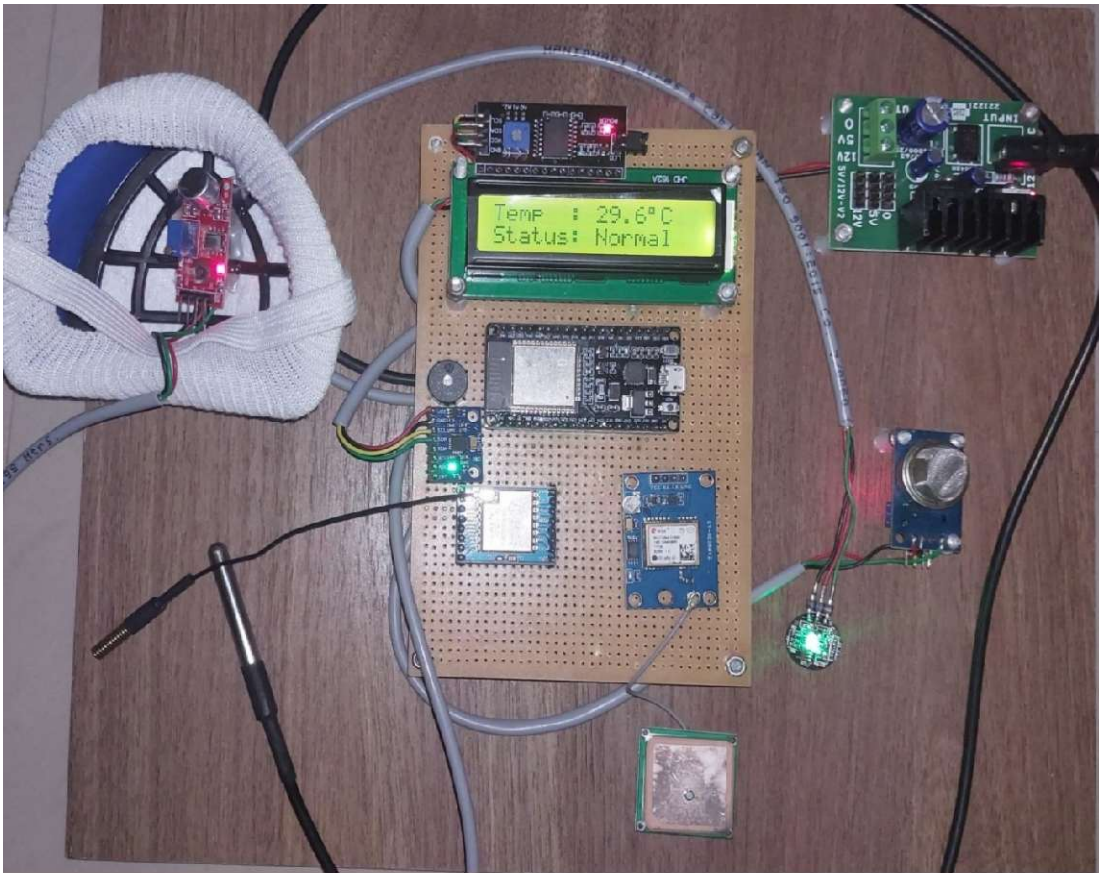

Figure 4.1 Soldier Node

During experimental testing, the transmitter section successfully captured and displayed all sensor values in real time. The DS18B20 temperature sensor accurately recorded variations in body temperature within expected tolerance levels. The pulse sensor effectively detected heartbeat signals and provided stable readings under normal testing conditions. The MQ135 gas sensor responded appropriately to changes in air quality, indicating variations in environmental gas concentration. The GPS module consistently provided accurate latitude and longitude coordinates, confirming reliable location tracking capability. The ESP32 processed all incoming sensor signals without delay and formatted the data into structured packets for LoRa transmission. The LCD connected to the transmitter unit displayed live readings of each parameter, confirming

correct sensor interfacing and system integration. The system demonstrated consistent performance under different test conditions, including indoor and semi-open environments, as shown in Fig. 4.2.

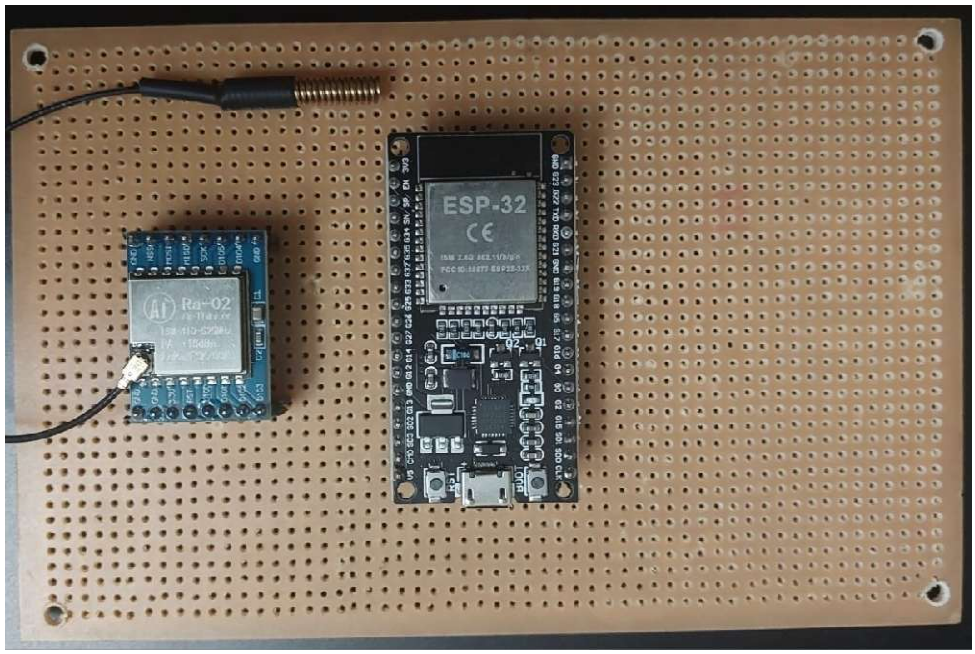

Figure 4.2 Base Station

At the receiver side, the base station successfully received all transmitted data packets from the soldier node. The ESP32 microcontroller decoded the incoming LoRa packets and displayed the extracted health and location parameters on the LCD screen and serial monitor.

The base station was also configured with a buzzer-based alert mechanism. When simulated abnormal sensor values were introduced—such as elevated temperature or high gas levels—the system correctly triggered the alert indicator. This confirmed the proper functioning of the threshold-based emergency notification mechanism. LoRa communication performance was evaluated by testing signal stability across varying distances. The system maintained stable data transmission over several meters during indoor testing, and performance observations indicated the capability for much longer communication ranges in open environments. The LoRa module efficiently handled real-time data transfer between the transmitter and receiver units, demonstrating strong

signal strength and immunity to minor interference. The overall hardware setup, confirmed proper integration of sensors, microcontroller, LoRa module, display interface, and power supply components. The communication link between the soldier node and the base station was tested using the configured LoRa frequency parameters. Throughout the testing process, the system maintained stable and reliable data transmission without packet loss within the operational range.

In summary, the LoRa-Based Soldier Tracking and Health Monitoring System performed successfully during practical evaluation. The results confirmed accurate health data measurement, reliable GPS tracking, stable long-range communication, effective alert generation, and efficient power utilization. These outcomes validate the feasibility and reliability of the proposed system for deployment in remote and infrastructure-limited environments.

4.3 FUTURE SCOPE

The proposed system can be further enhanced by expanding it into a multi-node LoRa mesh network to monitor multiple soldiers simultaneously. Future developments may include bi-directional communication, enabling command centers to send alerts or instructions back to soldiers. Integration of cloud-based monitoring platforms like Thing Speak will allow remote data storage, visualization, and analysis. Additionally, the use of LoRa extenders and advanced sensors such as ECG and SpO_2 modules can improve range, accuracy, and overall system performance in real-world defense applications.

4.4 CONCLUSION

This chapter presented the experimental results of the LoRa-based Soldier Tracking and Health Monitoring System. The system successfully demonstrated real-time monitoring of vital health parameters and location data with reliable long-range communication. The observed results confirm the efficiency of LoRa technology in low-power and network-independent environments. Furthermore, the future scope highlights the potential for integrating multi-node networks, cloud-based monitoring, and advanced sensors to enhance system functionality and scalability in defense applications.

CHAPTER 5

CONCLUSION

The LoRa-Based Soldier Tracking and Health Monitoring System was successfully designed and implemented to provide real-time monitoring of soldiers' health conditions and location using low-power, long-range wireless communication. The system integrates multiple sensors with an ESP32 microcontroller to measure vital parameters such as body temperature, heart rate, and surrounding gas concentration, while the GPS module accurately tracks the soldier's position. Data from the soldier node is transmitted to the base station through the LoRa RA-02 module, which ensures stable communication even in areas lacking cellular or internet connectivity. The project effectively demonstrates the advantages of LoRa technology in achieving long-range, reliable, and energy-efficient data transmission suitable for military operations.

During testing, the system performed accurately and consistently, validating its capability to function as a dependable communication and monitoring tool for defense applications. It ensures that soldiers can be tracked and monitored in real time, improving safety, situational awareness, and response efficiency during missions. Overall, this project establishes a strong foundation for future development of a multi-node LoRa mesh network that can monitor multiple soldiers simultaneously, enhancing coordination and security in critical field operations.

REFERENCES

[1] Victor Mora, Enrique Guzman, David Ruete, Jairo R. Coronado-Hernandez, & Gustavo Gatica. (2021). *Cardio Monitoring and Geolocation Control System for Guards of the Armed Forces with LoRa Technology.* IEEE Access, 9, 115662–115674.

[2] P. Kanakaraja, S.V. Aswinkumar, B. Jaya Krishna, K. Sri Hari, & V. Mani Krishna. (2021). *Communication Through Blackspot Areas Using LoRa Technology.* 2021 IEEE International Conference on Communication and Electronics Systems (ICCES), 1521–1526.

[3] Y. Li, Z. Cheng, & X. Liu. (2023). *A Novel Long-Range Communication System Using LoRa Technology for Remote Monitoring Applications.* 2023 IEEE International Conference on Advanced Communication Technology (ICACT), 568–572.

[4] R. Rani, & M. Karthikeyan. (2020). *Design and Implementation of LoRa-Based Wireless Data Communication System.* 2020 IEEE International Conference on Electronics, Computing and Communication Technologies (CONECCT), 1–5.

[5] M. S. Ramprasad, & T. R. Prasad. (2022). *Performance Evaluation of LoRa Transceiver Modules for Low-Power Wireless Communication.* 2022 IEEE International Conference on Communication Systems and Networks (COMSNETS), 324–328.

[6] A. R. Patel, & M. S. Kumar. (2021). *Design and Implementation of a LoRa-Based Wireless Health Monitoring System.* 2021 IEEE International Conference on Intelligent Technologies (CONIT), 1–6.

[7] K. C. Choudhary, N. Prasad, & R. Thirunavukkarasu. (2022). *LoRa-Based Communication Network for Remote Area Connectivity.* 2022 IEEE International Conference on Communication and Signal Processing (ICCSP), 456–460.

[8] V. Gupta, & A. Kumar. (2021). *Performance Analysis of LoRa Transceivers for Long Distance Communication.* 2021 IEEE International Conference on Advances in Computing, Communication and Control (ICAC3), 1–6.

[9] M. J. Singh, & P. S. Rao. (2023). *A Low Power Wireless Communication System Using LoRa for Defense Applications.* 2023 IEEE International Conference on Communication Systems and Networks (COMSNETS), 115–120.

[10] S. Parameshwari, & N. Ramya. (2022). *Real-Time Soldier Health and Position Tracking System.* 2022 IEEE International Conference on Signal Processing and Embedded Systems (SPES), 75–80.