Smart Scale

Pranav Kaul, Nitin Yadav, Dr. Anuj Grover
Indraprastha Institute of Information Technology, Delhi

Centre for intelligent Product Development

Motivation

Accurate health management hinges on energy balance, yet manual nutrition logging creates critical user friction, leading to high adherence failure. This tedious, error-prone process also compromises data reliability (inaccuracy), a critical barrier for **diabetic patients** (carb tracking) and **athletes** (protein goals). We need a paradigm shift: an automated, AI-driven system to transform tracking from a burdensome "second job" into a seamless, objective assessment.

Work Done

- Design Thinking and Problem Validation
- Finalizing Requirements
- System Architecture and Design
- Hardware Prototype and Implementation
- Software Implementation and Integration
- Rigorous Testing of System
- Mechanical Enclosure **(TRL 6)**

Methodology

We have developed a cohesive cyber-physical system that eliminates the friction of manual methods through a seamless "Weigh & Sync" workflow. By pairing a custom food scale directly with the application, we significantly reduce user fatigue and data entry errors. This integration is backed by a RAG-based AI Coach, which goes beyond simple counting to understand the user's long-term biology and improved adherence

Top level block diagram

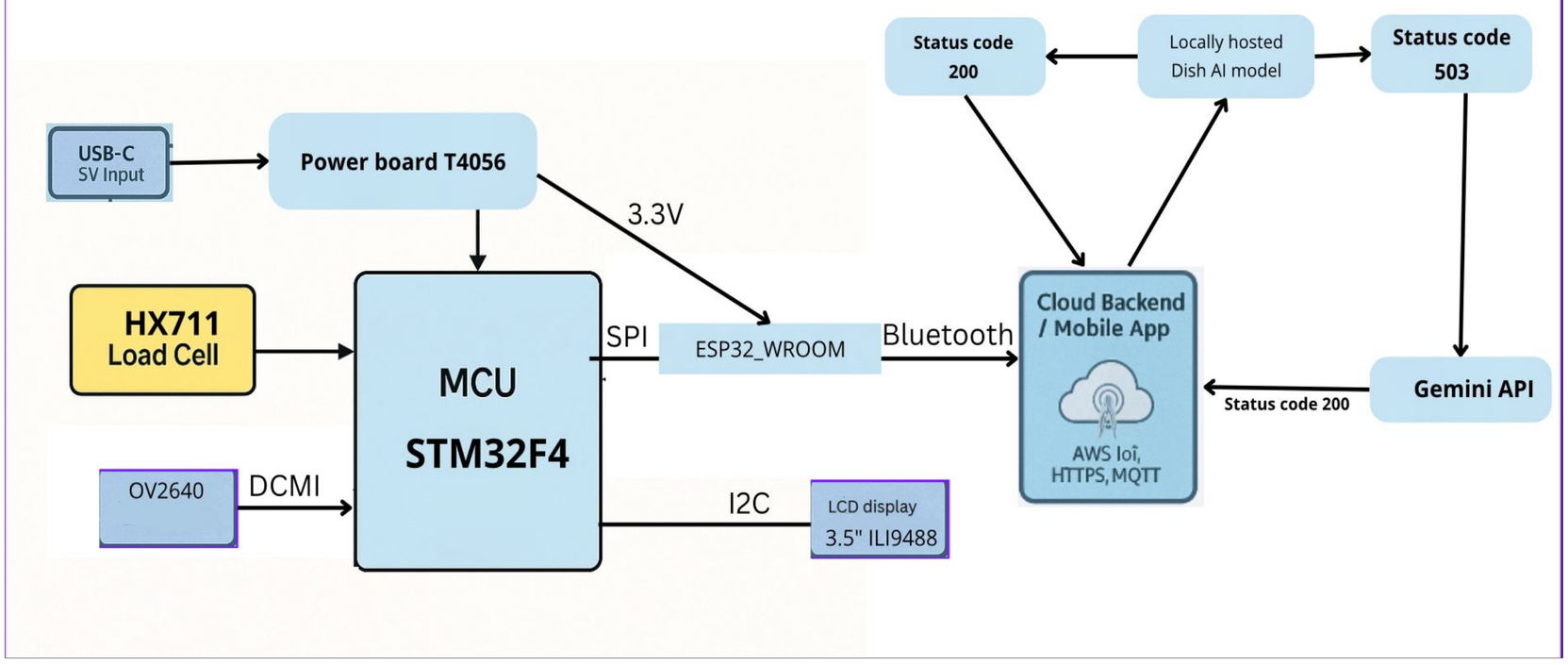

Key Findings

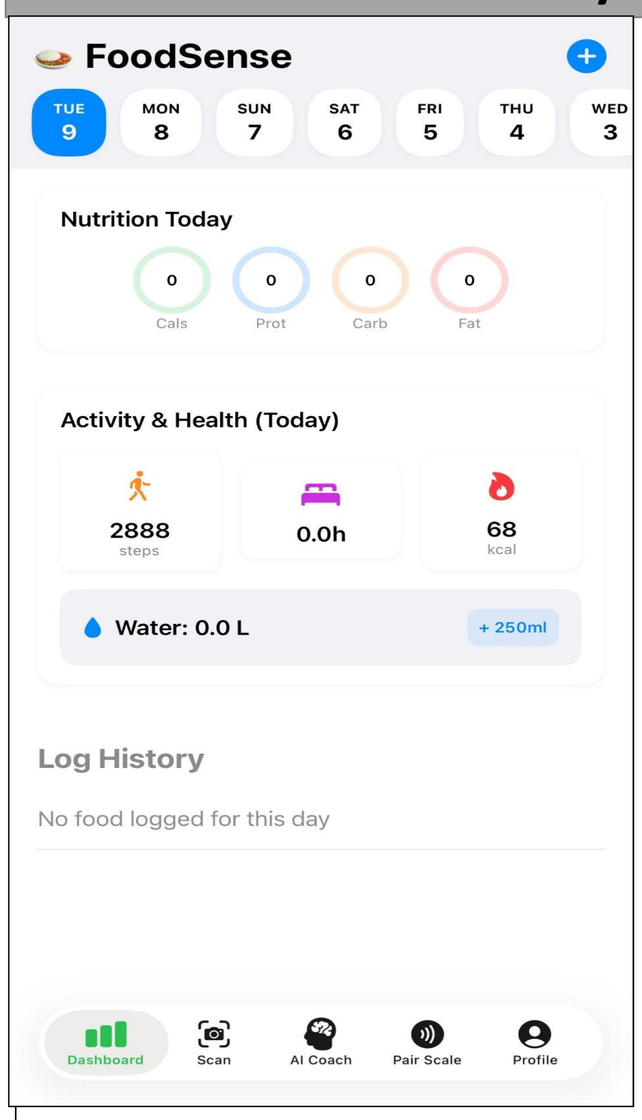

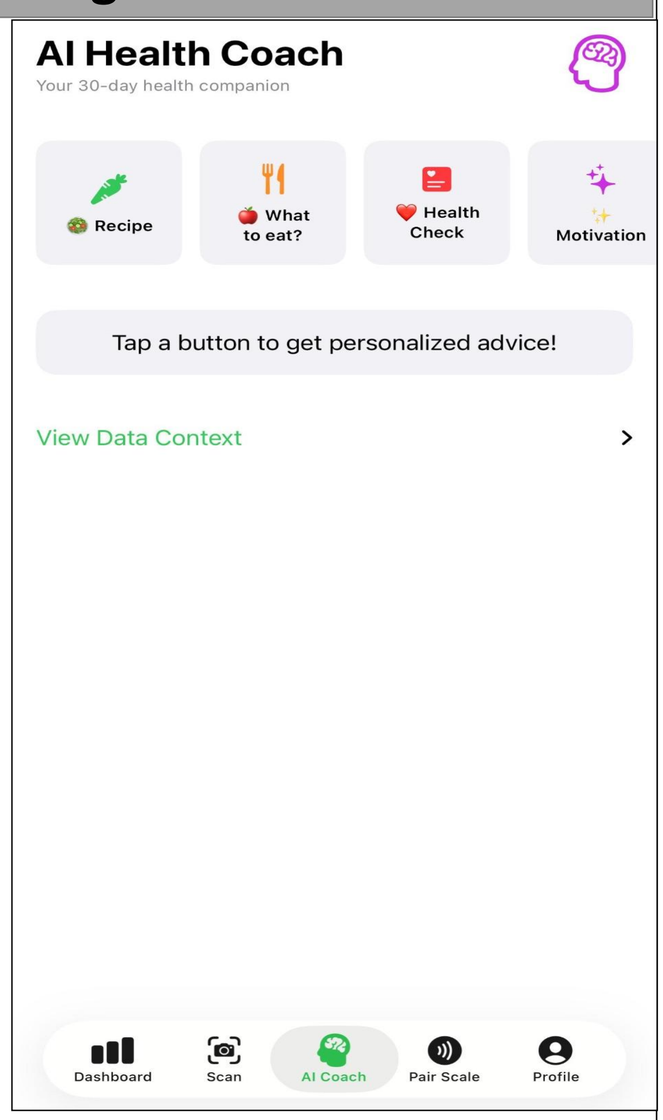

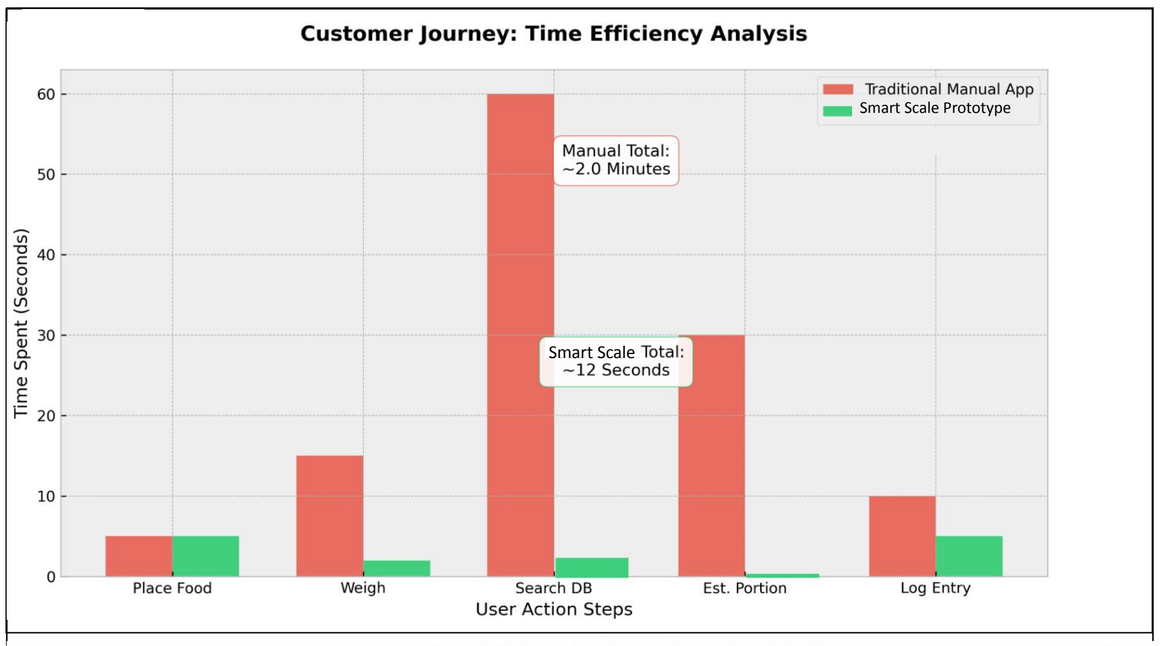

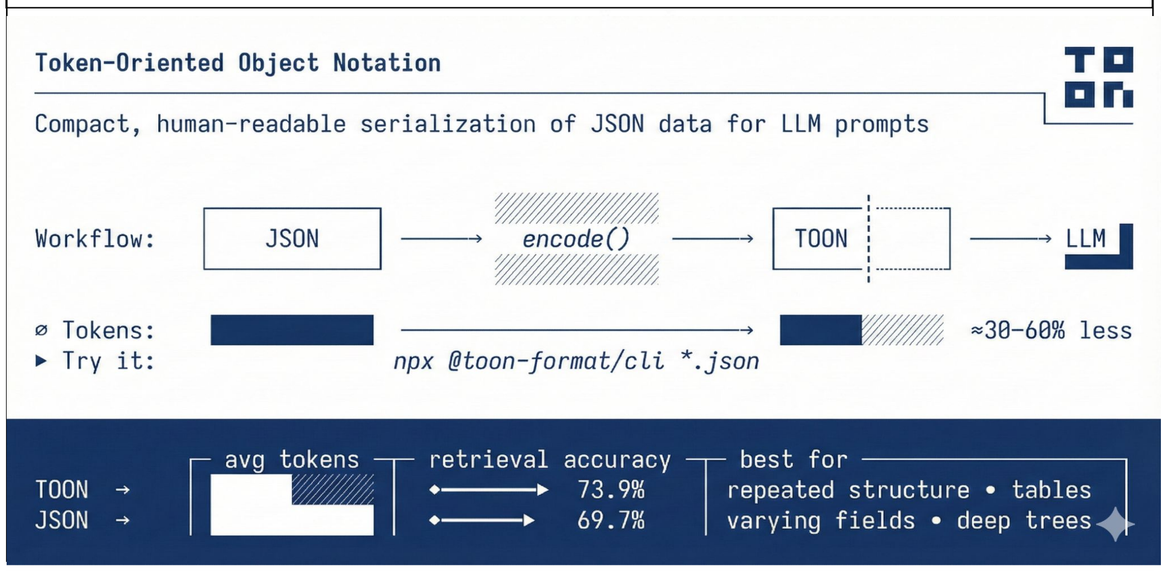

Personalized App Features

RDA completion %

Alerts if daily calcium, iron, B12, fiber, potassium are low.

Hardware & Software Flow

A. Hardware: Load Cell (HX711) → STM32F4 MCU Camera (OV2640) → MCU WiFi (ESP-32 WROOM) → App

Battery: 8 hr use, USB-C charge

B. Software (FoodSense AI App): Edge inference OR cloud fallback Nutrition DB sync Automatic update Barcode fallback LLM/manual override for rare foods

Challenge	Proposed Technical Solution
Overlapping Bounding Boxes	Implemented Non-Max Suppression (NMS) directly in ModelDataHandler.swift with an IoU threshold of 0.45, ensuring clean detections for cluttered plates.
Latency in Cloud Analysis	Hybrid approach using Quantized TFLite models for instant on-device results, reserving Gemini API calls only for complex scenes.
Unstructured Nutrition Data	Converted generic USDA/IFCT datasets into a structured JSON/TOON format enabling O(1) lookup efficiency on mobile.

Conclusion

The SmartScale system successfully demonstrates a holistic approach to nutrition tracking by bridging the gap between hardware sensors and AI-driven software. By integrating a precision weighing mechanism (STM32 F4 & Load Cell) with a sophisticated mobile application, we have eliminated the friction often associated with manual calorie logging.

Publication

IEEE Applied Sensing Conference 2026

Future Work

- Beta Testing and Feedback Loop
- Optimise
-