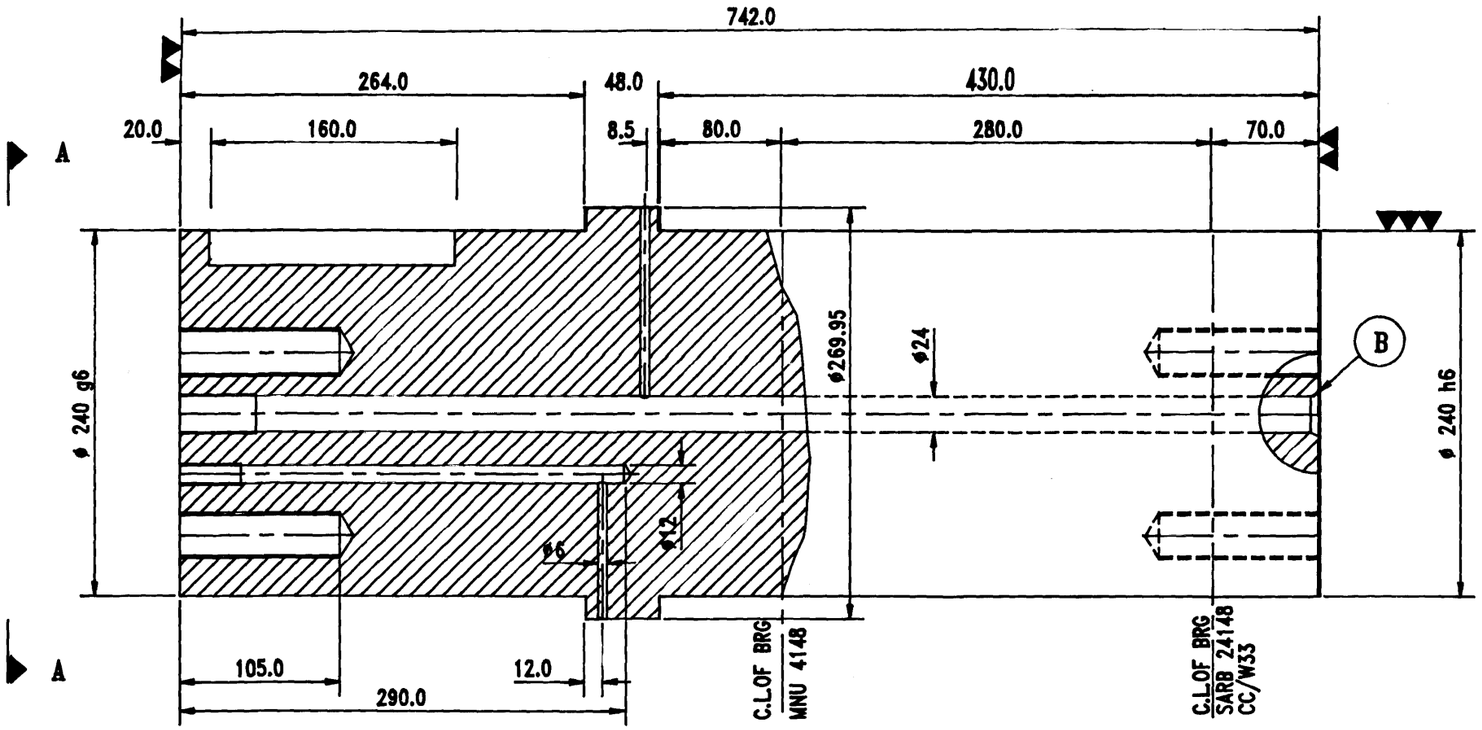

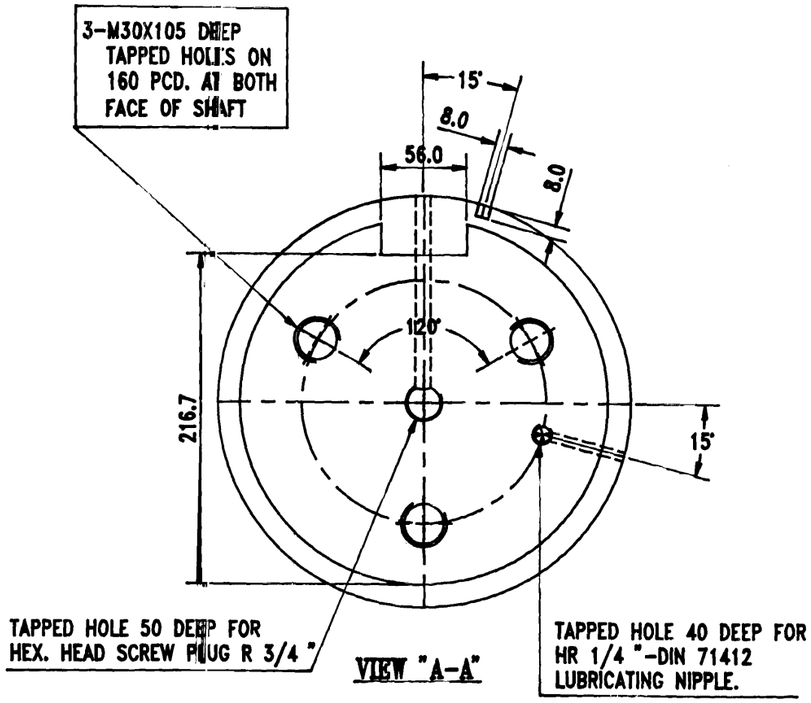

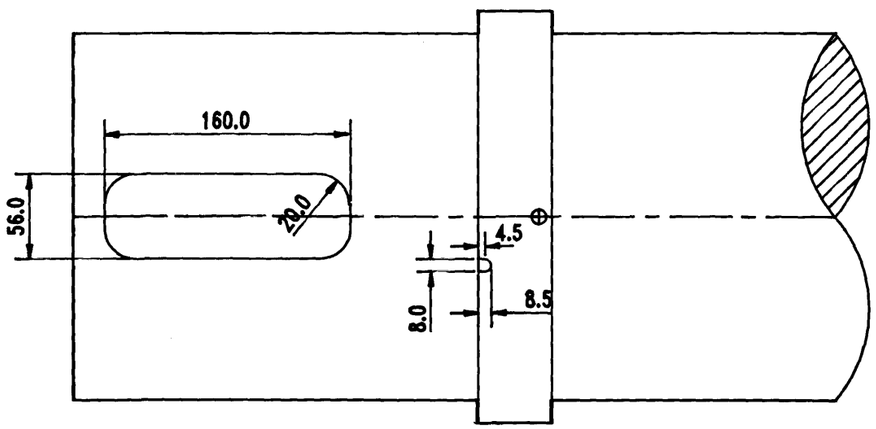

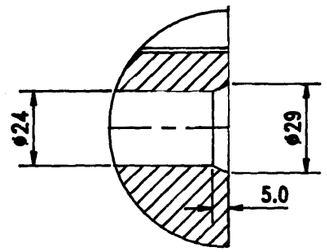

DETAIL AT "B"

NOTES:

1) ALL DIMENSIONS ARE IN MM UNLESS OTHERWISE SPECIFIED.
2) ALL OVER MACHINING - 1MM UNLESS OTHERWISE SPECIFIED.
3) PART NO: 350, QTY.:03 NOS., WT/P : 266.0 KG APPROX.
   MATERIAL : FORGED EN-19 ,SHAFT DULY HEAT TREATED AND GROUND.
4) SHAFT SHOULD BE ULTRASONIC TESTED BEFORE FINAL MACHINING.

REV	DESCRIPTION	DATE	DRN	CHD	APPD

REVISION STATUS

GRASIM INDUSTRIES LIMITED
(WHITE CEMENT DIVISION)

	NAME	DATE
DRAWN	K.B.ASAWA	98/03/04
CHECKED		
CHECKED		1.4.98
APPD.		

TITLE: VRM MPS 2250B
AXLE FOR GRINDING ROLLER

REF. DRG. NO.: 132 254-2

SCALE 1:4 | PROJECTION

DRG.NO.: BW-SP-03-42

REVISION 0