Sr.NO.	DESCRIPTION	MATRL.	QTY.	WT. IN KG.	REF DRG NO.
1	BOLT	En-8	1	--	--

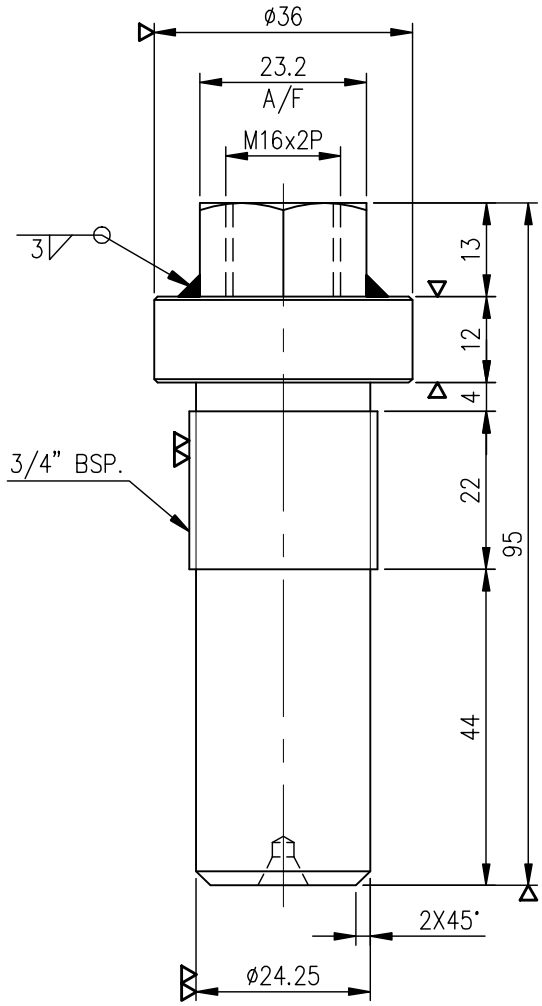

REVISIONS			
REV.	DESCRIPTION	REV. BY	DATE	APPD. BY

NOTES:-

1. REMOVE SHARP EDGES & CORNERS
2. MATERIAL & QTY. CONFIRM BY USER DEPTT.

TITLE:

BOLT FOR RP-150 BLOWER COUPLING

	SIGN	DATE
DRN BY	R.S.Jhala	24/08/11
CHK BY	A. RATHORE	25/08/11
APPD BY	S. PATHAK	25/08/11

ALL DIMENSIONS ARE IN MM UNLESS OTHERWISE SPECIFIED | SCALE 1:1

REF.:- —
—

DRG. NO. - 03/RMT/A-6649
SHEET 1 OF 1

REV. 0

UltraTech Cement Ltd.
(Unit: VIKRAM CEMENT WORKS)
LINE - I & II

VIKRAM CEMENT WORKS

VIKRAMNAGAR, P.O. - KHOR
Dist. NEEMUCH, (M.P.) - INDIA

ADITYA BIRLA
UltraTech