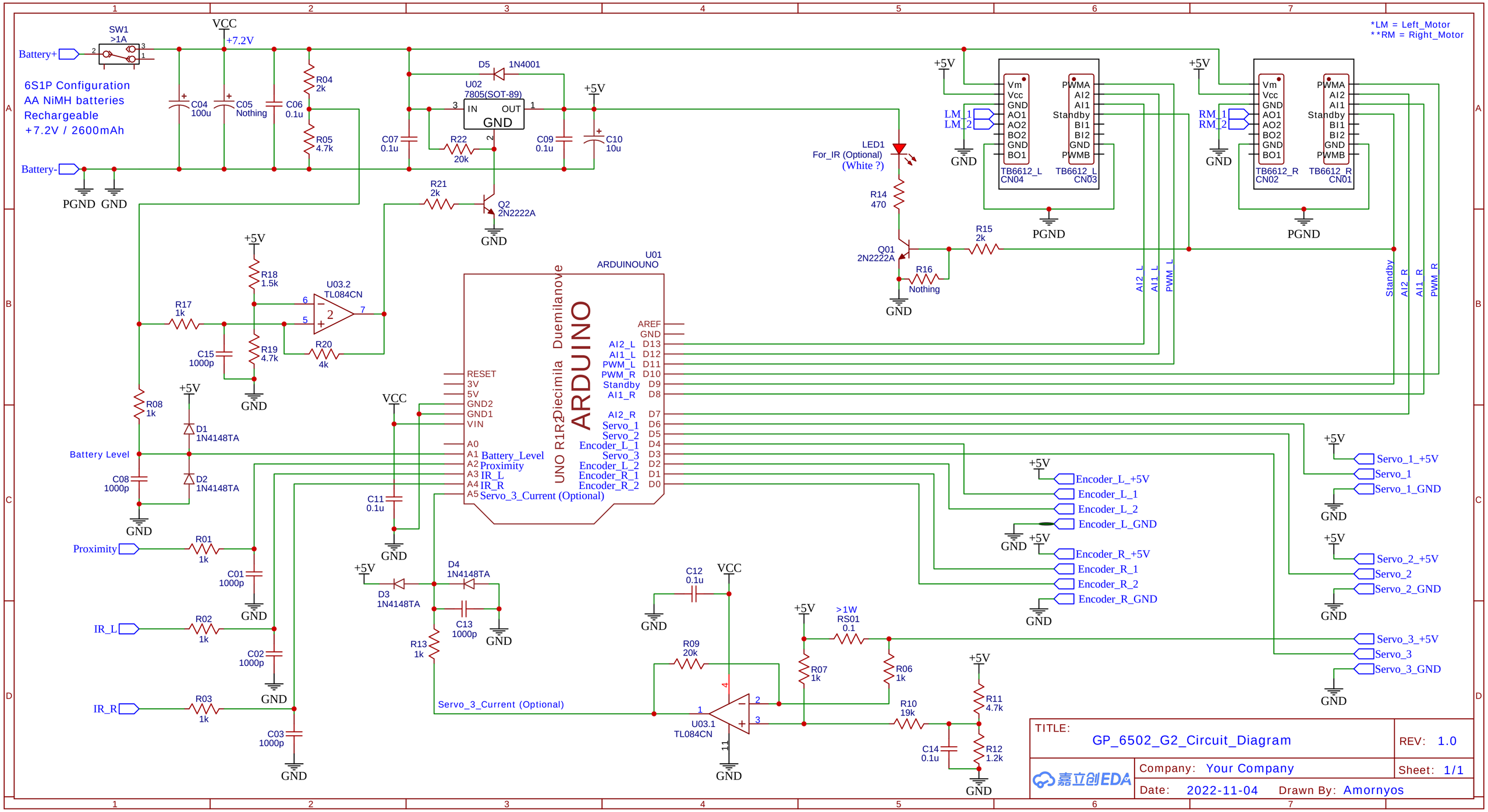

TITLE: GP_6502_G2_Circuit_Diagram	REV: 1.0
Company: Your Company	Sheet: 1/1
Date: 2022-11-04 Drawn By: Amornyos	