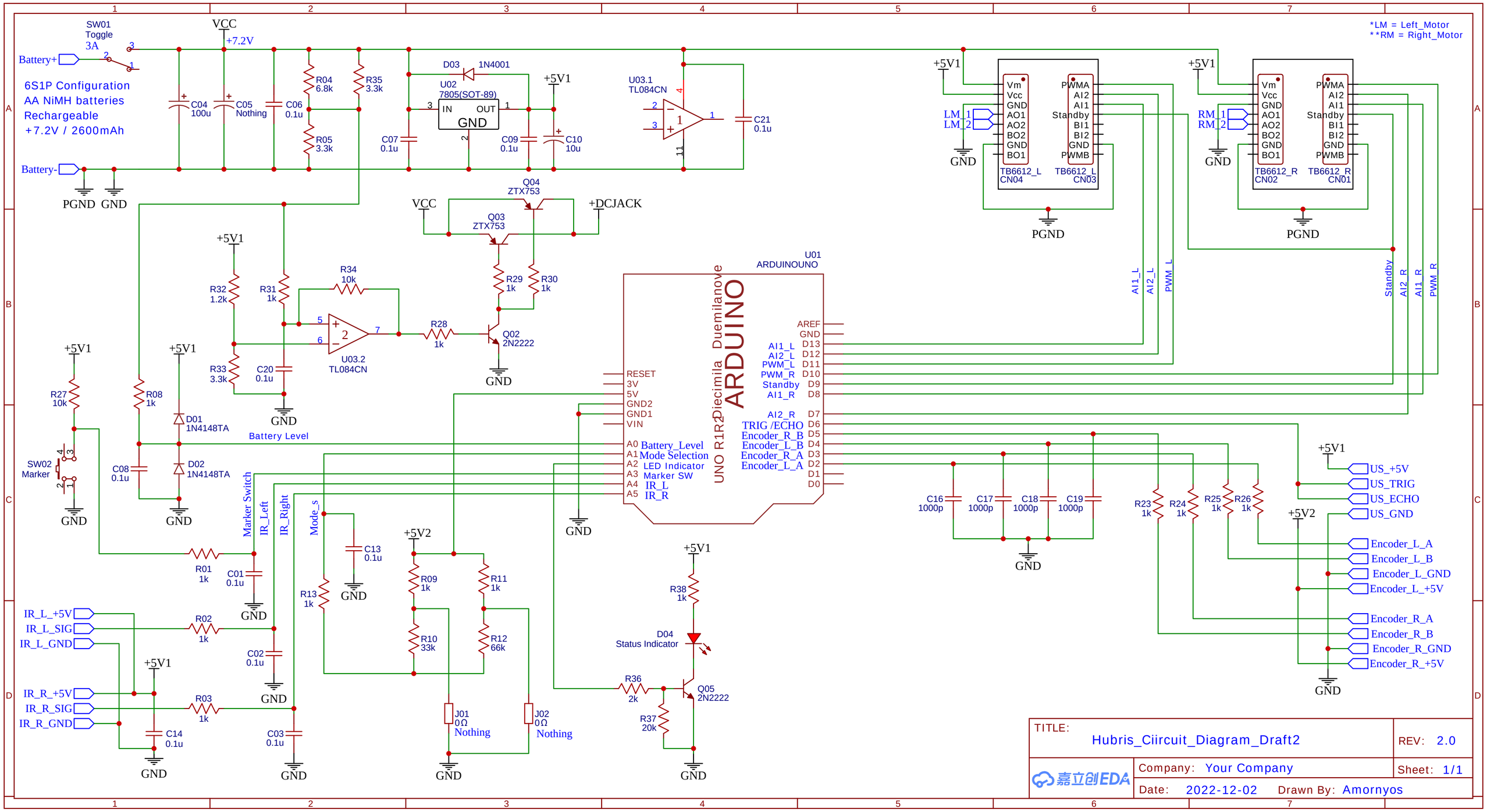
*LM = Left_Motor
**RM = Right_Motor
SW01
Toggle
3A
Battery+
Battery-
6S1P Configuration
AA NiMH batteries
Rechargeable
+7.2V / 2600mAh
VCC
+7.2V
C04
100u
C05
Nothing
C06
0.1u
R04
6.8k
R05
3.3k
R35
3.3k
D03
1N4001
U02
7805(SOT-89)
IN
OUT
GND
C07
0.1u
C09
0.1u
C10
10u
+5V1
U03.1
TL084CN
C21
0.1u
PGND
GND
Q04
ZTX753
Q03
ZTX753
VCC
+DCJACK
R29
1k
R30
1k
R34
10k
R32
1.2k
R31
1k
R33
3.3k
C20
0.1u
U03.2
TL084CN
R28
1k
Q02
2N2222
R27
10k
R08
1k
D01
1N4148TA
D02
1N4148TA
Battery Level
SW02
Marker
C08
0.1u
Marker Switch
IR_Left
IR_Right
Mode_s
R01
1k
C01
0.1u
IR_L_+5V
IR_L_SIG
IR_L_GND
R02
1k
C02
0.1u
IR_R_+5V
IR_R_SIG
IR_R_GND
R03
1k
C14
0.1u
C03
0.1u
+5V2
C13
0.1u
R13
1k
R09
1k
R11
1k
R10
33k
R12
66k
J01
0Ω
Nothing
J02
0Ω
Nothing
U01
ARDUINOUNO
UNO R1R2 Diecimila Duemilanove
ARDUINO
RESET
3V
5V
GND2
GND1
VIN
A0 Battery_Level
A1 Mode Selection
A2 LED Indicator
A3 Marker SW
A4 IR_L
A5 IR_R
AREF
GND
D13
D12
D11
D10
D9
D8
D7
D6
D5
D4
D3
D2
D1
D0
AI1_L
AI2_L
PWM_L
PWM_R
Standby
AI1_R
AI2_R
TRIG /ECHO
Encoder_R_B
Encoder_L_B
Encoder_R_A
Encoder_L_A
R38
1k
D04
Status Indicator
R36
2k
R37
20k
Q05
2N2222
LM_1
LM_2
TB6612_L
CN04
TB6612_L
CN03
RM_1
RM_2
TB6612_R
CN02
TB6612_R
CN01
Vm
Vcc
GND
AO1
AO2
BO2
GND
BO1
PWMA
AI2
AI1
Standby
BI1
BI2
GND
PWMB
C16
1000p
C17
1000p
C18
1000p
C19
1000p
R23
1k
R24
1k
R25
1k
R26
1k
US_+5V
US_TRIG
US_ECHO
US_GND
Encoder_L_A
Encoder_L_B
Encoder_L_GND
Encoder_L_+5V
Encoder_R_A
Encoder_R_B
Encoder_R_GND
Encoder_R_+5V
TITLE:
Hubris_Ciircuit_Diagram_Draft2
REV: 2.0
Company: Your Company
Sheet: 1/1
Date: 2022-12-02
Drawn By: Amornyos
嘉立创EDA