Child Seat Seatbelt Alarm

I. Needs Assessment

A. Client/Customer Definition

The seatbelt is pivotal to every transportation vehicle, especially personal cars. There is a 92% seatbelt use rate in the U.S., saving an estimated 374,276 lives since their implementation. Despite this high percentage, 50% of all vehicle related deaths were recorded to be unrestrained individuals. Through a seatbelt detector and alarm system, the careless portion of these deaths can be prevented. However, there is a demographic of vehicle passengers that are forgotten in present seatbelt alarm systems. There are common cases in which caregivers forget to buckle in their child on booster seats or when the child unbuckles their seatbelt, unbeknownst to the passengers in the front of the car. Since many of these booster seats aren't connected to the vehicle's seatbelt detector system, forgetting this task can have severe consequences. [1]

The booster seat is intended for children under 5 feet, weighing less than 36kg and under 8 years of age. There are approximately 49.6 million children aged 0-11. We are interested in the approximate number of children between 0-4. Assuming the population is equally scattered throughout each year, there are approximately 18 million children. Considering the income demographic of the US, we expect those in upper middle class to upper class would be purchasing this product. This assumption comes from the reasoning that less wealthy families would refrain from spending money on an unnecessary product. With around 37% of the population residing in this upper middle class, our population lowers to 6.7 million. [2, 3, 4]

Parties concerned with this product: Families with children are the direct consumers who will greatly impact the project, as this is a customer focused problem. Ideally, there would be surveys concerning possible designs that families can vote for, however at a smaller scale this project will consider a smaller number of responses. Car manufacturers or other parties in the process of the industry should generally not be impactful, as the design should be compatible with most automobiles. The design will have to be strictly compatible with baby seat manufacturers, however such a design will generally be unlikely to change. The proposed alarm system will carefully follow car safety regulations to ensure clients using the product are unthreatened.

B. Competitive Landscape

1) Regular Car Seatbelt Alarm System: Current seatbelt detectors in many cars use magnetism as the main function for detection, namely a reed switch and magnet. This is placed inside the holster of the seatbelt. When the seatbelt is unbuckled, the reed switch is closed. These signals can then be transferred to the car system and subsequently analyzed as data for usually the purpose of alarming the driver of the unbuckled seatbelt. The mechanism functions as follows: when the reed switch senses a magnetic field (or in this case a disruption of a magnetic field), the reed switch opens and when this data is sent to the car system it will disable the alarm as the presence of a buckled seatbelt is confirmed. However, these seatbelts are specialized for regular car seats and thus would not be applicable for portable miniaturized baby seats. [5]

2) Smart Booster Seats with Sensors: These advanced booster seats are equipped with sensors that can detect if there is a child seated and if they are properly buckled. This integrated system is linked with a mobile app that sends real-time alerts about the status of the child in the booster seat, like when the child's seatbelt is unbuckled while the car is in motion. However, there are shortcomings to this system. For instance, these smart booster systems require consistent and reliable wireless connectivity. If the Wi-Fi or Bluetooth is disrupted, this can lead to delayed or missed alerts which can have disastrous consequences.

3) Camera-Based Monitoring Systems: This system involves installing a camera in the vehicle that monitors rearview passengers and displays the footage to a screen on the dashboard of the vehicle. This allows for the driver to easily glance at the rear passengers and check if the seatbelt is buckled. However, the storing of this footage can have serious privacy concerns. In addition, installing these camera

systems is costly and requires professional installation.

https://owlcam.com/pages/why-the-owlcam-dash camera

C. Requirement Specification

1) Functional Requirements

a) Microprocessors: 2 STM32F401RE microprocessors are required (one for measuring and recording input data and the other for receiving this input data and activating alarm outputs)

b) Strain Gauge: To ensure that the system accurately detects whether the seatbelt is fastened, a strain gauge will be attached to a thin sheet of plastic that is in physical contact with pressure points in the seatbelt buckle.

c) Seatbelt Model: The seatbelt will be made of a simple backpack buckle (as shown in Figure 1). There are gaps in the buckle that the belt slides into. The strain gauge will be set up next to the gap so when the belt slides into the buckle, a point of physical contact is created between the sensor and the belt.

d) Alarm System: An LED light and an audio piezo will be used to mimic present seatbelt detector alarm systems in cars. LED lights will serve as a visual alarm and will flicker when the seatbelt is not buckled, while the audio piezo will serve as an audio alert. The audio alarm will be a repeated chime in an interval of 2 seconds for 90 seconds before stopping (along with the LED lights).

2) Technical Requirements

- The energy stored by the device should not exceed 500 mJ at any point in time.
- The device should not consume, transfer, discharge, or otherwise expend more than 30W of power at any point in time.
- The transmission distance between the 2 circuits must span at least 1.6 m.

3) Safety Requirements

a) LED Lighting: Avoid LED lights above 3000K or labeled “bright white”, “neutral white”, “cool white”, or other lights that generally have a crisp, stark white colour (due to the significant amount of blue light in their spectrum) [2].

b) Sound Levels: By referencing recommended sound levels and durations for present car seatbelt alarm systems, the sounds emitted by the audio alarm in our project will be between 80- 90 dB (same sound levels as current car alarm systems) and will stay triggered for 90 seconds. In addition, the tone of the audio alarm must not be startling to ensure that the driver is not taken by surprise and makes mistakes on the road.[3]

II. Design

The thin plastic sheet must be tense so that when the latch enters the buckle, the sheet is pushed upwards. When the latch exits the buckle, the tension of the sheet should result in the sheet rebounding back to a straight, resting position.

A. Overview

The alarm system is meant to detect when the seatbelt for a baby seat is properly fastened or not and warn the driver accordingly.

Figure 1: Wheatstone Bridge

B. System Components:

1) Hardware

Component	Distributor	Manufacturer, Location
STM32 Boards (2)-	uWaterloo Store	-

Strain Gauge (1)-	Amazon	DAOKI, China
LED Green Bar (1)	RigidWare	-
Audio Piezo(1)	RigidWare	-
Jumper Wires (2)	RigidWare	-
Malleable Plastic(1)	RigidWare	-

C. Circuit Diagrams:

1) Wheatstone Bridge

Figure 1

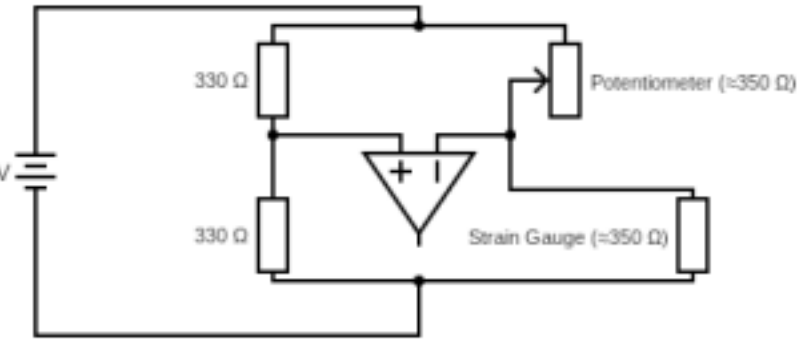

Simply measuring the resistance change produced by the strain gauge would be far too small to meaningfully consider. Using a Wheatstone bridge, this small change in resistance can be better represented by a small change in voltage, which can then be amplified and properly analyzed. Wheatstone bridges consist of 2 pairs of resistors, each resistor is in series with their pair, while parallel with the other pair of resistors.

The significance here is that the difference in voltage flowing between each pair of resistors will equal to 0 if the ratio between a resistor and its pair is equal. By using 3 known resistors, the strain gauge change in resistance can be detected through a change in voltage. One of these resistors can be regulated with a potentiometer to ensure the voltage difference of an unstressed strain gauge is 0.

Child Seat
Dashboard

STM32 #1

STM32 #2 Tactile/Pr essure
Audio Alarm

Sensor LED Lights

Figure 3: Flowchart

2) Voltage Amplifier
Figure 2
To measure the voltage the miniscule voltage can be sent through a voltage amplifier, specifically a differential amplifier that will reduce the noise in the system. and the analog output can be read by the STM32's ADC. The magnitude of which the voltage difference (V2 - V1) is increased by is proportional to the ratio of the extended resistors (10kΩ) to the direct resistors (330Ω). The resistors should be chosen such that the estimated voltage difference for whether or not the seatbelt is buckled will produce significant values to the ADC of the STM32#1. [10]

3) LED and Buzzer
Figure 3
The ADC Value obtained by the first STM32 will be transferred to the second STM32. STM32 #2 will subsequently evaluate the values and trigger the LED and Buzzer accordingly. In a systematic fashion, the STM32 #2 will be programmed to wait for a set amount of time before triggering the LED alarm, followed by another set amount of time before

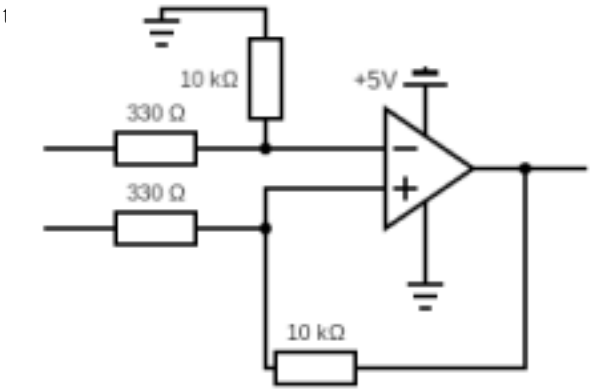

V1

Figure 2: Voltage Amplifier

V2

ADC

case the strain gauge) is transferred to the STM32 #1, The STM32 #1 will then output specific values to the STM32 #2, which following the values and their corresponding set of instructions will trigger the LED and audio when required.

E. Schematics:

III. Technical Analysis

A. Principle: $R = pL/A$ *and* $R=R_0(1+\alpha\Delta T)$ (1) (2)
Incorporating a stress gauge sensor comes with many calculations. Within this formula, R represents the resistance in ohms, p the Resistivity constant of the material, L represents the length of the material, and A represents the cross-sectional area of the wire. It represents the relationship between resistance, length, and cross-sectional area. This principle is fundamental in understanding how the following principles are derived. The second principle mentioned here displays the relationship between resistance and temperature. R_0 represents the base resistivity, α represents the resistivity constant for temperature change, and ΔT represents the change in temperature. Using both these formulas allows us to create a range of resistance values that the STM32 adheres to. The positioning of the strain gauge must allow the STM32 to successfully predict a fastened seatbelt despite the change in temperature. [6]

STM32 #1

STM32 #2

system should be properly calibrated. The input into the ADC configured pin A0 will be either a value near 0 or a non 0 value (in our case <100 is a near 0 value and >100 is a non 0 value). This value can be

The 3.3V port will power the entirety of the strain gauge to the amplifier system. Note that all wires point towards the direction of current, and red wires simply direct power. The rest of the colors are for differentiability purposes. The wire then connects to the Wheatstone Bridge system, in which all the circuitry required is labeled above. The Wheatstone Bridge system is passed through the Amplifier System on the bottom left, which is an enlarged view of the system. There are a few alterations, the two ground port schematics will be connected and sent to the STM32 ground port. The amplified magnitude is specific to the strain gauge, power supplied, and resistors. Thus, the

amplifier, and similarly the potentiometer must be calibrated each time. To do this, place the strain gauge in the unbuckled state. Ensure the potentiometer has a flexible range of change in resistance, and subsequently load the ADC values. Calibrate the gain setting on the voltage

displayed for calibration purposes, but also transmitted to STM32 #2. STM32 #2 will then measure the amount of time the ADC value received stays at 0 and trigger the alarm procedure accordingly.

The following is not the complete code, but a sample portion outlining the ADC value collection. When paired with the initial code of the following will display the ADC value associated with the voltage.

```
#include <string.h>
#include <stdio.h>

int main(void) {
HAL_Init();
SystemClock_Config();
MX_GPIO_Init();
MX_USART2_UART_Init();
MX_ADC1_Init();
HAL_ADC_Start(&hadc1);
uint16_t ADC_Value;
char msg[20];

 While (1) {
        HAL_ADC_PollForConversion(&hadc1, HAL_MAX_DELAY);

ADC_Value);
ADC_Value = HAL_ADC_GetValue(&hadc1); sprintf(msg,
"%u\r\n", HAL_UART_Transmit(&huart2, (uint32_t*)msg,
strlen(msg),
HAL_MAX_DELAY); }
}
```

amplifier until a moderate number in comparison to the max ADC value (in our case 4095) is reached.

Then calibrate the potentiometer until the ADC values are stable around 0. Upon completing this

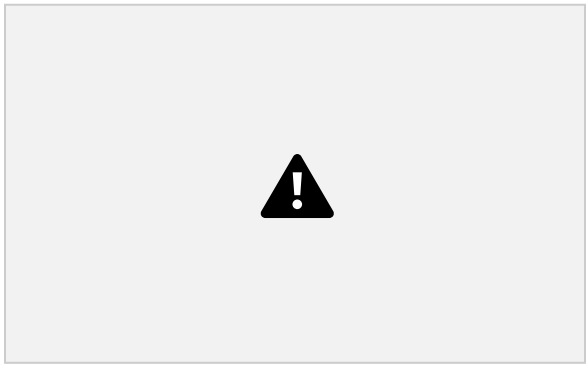

Figure 4: LED and Buzzer

• Sends ON signal if seatbelt is fastened • Sends OFF signal if seatbelt is unfastened • Initialization Button to allow activation and inactivation of alarm system

C. Principle: Heaviside Functions $\{0 \mid \text{\textcircled{R}} < 0,\ 1 \mid \text{\textcircled{R}} \geq 1\}$

Heaviside Functions will be used to ensure the STM32 follows a procedure of alarms. Specifically, the STM32 will trigger the LED light after a set period (25 s) has passed with an OFF signal from STM32 #1 (Flickering Speed Change Optional).

B. Principle: $\text{\textcircled{R}}_{\text{\textcircled{R}}} = (3)$

After another set period (20s or 45s total), the audio

alarm will be triggered. Finally, after another set period (45s or 90s total, the Alarm System will shut

This formula starts with the base definition of the resistance of a specific material. $\text{\textcircled{R}} = \text{\textcircled{R}}_0 + \Delta\text{\textcircled{R}}$ The ΔR is the component that the device measures and the significant portion. ΔR can be represented through the given relationship of resistance with resistivity constant, length, and cross-sectional area as:

$$\Delta\text{\textcircled{R}} = \frac{\text{\textcircled{R}}}{\text{\textcircled{R}}}\Delta\text{\textcircled{R}} + \frac{\text{\textcircled{R}}}{\text{\textcircled{R}}}\Delta\text{\textcircled{R}} + \frac{\text{\textcircled{R}}}{\text{\textcircled{R}}}\Delta\text{\textcircled{R}}$$

Modeling the change in resistance using the change in all its components allows us to find the following equation after taking the partial derivatives using the formula previously mentioned.

$$\Delta\text{\textcircled{R}} = \frac{\text{\textcircled{R}}}{\text{\textcircled{R}}}\Delta\text{\textcircled{R}} - \frac{\text{\textcircled{R}}}{\text{\textcircled{R}}^2}\Delta\text{\textcircled{R}} + \frac{\text{\textcircled{R}}}{\text{\textcircled{R}}}\Delta\text{\textcircled{R}}$$

Substituting the formula once again into each polynomial and dividing both sides by R gives:

$$\frac{\Delta\text{\textcircled{R}}}{\text{\textcircled{R}}} = \frac{\Delta\text{\textcircled{R}}}{\text{\textcircled{R}}} - \frac{\Delta\text{\textcircled{R}}}{\text{\textcircled{R}}} + \frac{\Delta\text{\textcircled{R}}}{\text{\textcircled{R}}}$$

Dividing all sides by ε and replacing them with G_f obtains:

$$\frac{\Delta R}{R} = \frac{\Delta L}{L}$$

The gauge factor is given for various kinds of strain gauges. The use of a Wheatstone bridge will be required to find base resistance and thus find the strain on the strain gauge. The strain is easier to manipulate, and using a range of probable strain values a range of resistance change values can be used to determine the presence of a fastened seatbelt. [7, 8]

off and will require initialization). [9]

IV. Costs

#	Material	# of parts	Cost ($)
1	Strain Gauge	10	10.99
2	Audio Piezo	1	0.90
3	Jumper Wires (0.5m)	2	0.15
4	LED Green Bar	1	1.15
5	Wires (1.5m)	2	1.50

V. Risks

A. Energy Analysis

1) Energy Usage

The Nucleo Boards will be connected to a lab computer provided by the University of Waterloo, via a mini-USB 2.0 Cable. The computer's USB ports supply 5V of electricity, a maximum current of 0.5A, and therefore a max power supply of about 2.5 watts, meeting the mandated power ceiling of 30 watts.

https://www.cmd-ltd.com/advice-centre/usb chargers-and-power-modules/usb-and-powe r module-product-help/usb-charger faqs/#:~:text=Most%20computer%20USB%20por ts %20supply,maximum%20current%20of%200.5A.

2) Energy Storage

The system does not involve any battery so there will be no mechanical or chemical energy stored in the system. There will also be no extra capacitors installed on the Nucleo Boards, however, there will be some electrical energy stored in the boards' built in capacitors. To avoid the complexity of performing a full energy analysis of all the capacitors in the board, the worst-case scenario where the largest capacitor in the circuit was in series was checked. The C16 capacitor on the STM boards stores 10 microfarads (uF) and by assuming that this capacitor takes the maximum voltage in the circuit (5V), the energy storage in this capacitor is:

$$E = 0.5(C)(V)^2$$

$$E = 0.5(0.01\ mF)(5\ V)^2$$

$$E = 0.125\ mJ.$$

Therefore, the maximum possible energy that could be stored by the capacitor is 0.125 mJ. Since this "worst-case" energy value was calculated to be below the mandated energy storage ceiling of 500 mJ, it is guaranteed that the STM boards meet this requirement. In aLED light as well as the audio piezo when they are activated.

B. Risk Analysis

1) Possible Negative Consequences on Safety or Environment from Using Design as Intended

a) Damage to Protective Covering: If the cover were to break due to wear and tear or other scenarios, the electrical components inside would be exposed to the environment. This creates unsafe conditions due to the possibility of unwelcome contact with surfaces and moisture, possibly causing injury or even death.

b) Electrical Components Flammability/ Combustibility: In case of a vehicle crash, the circuitry/wiring may catch fire or combust, possibly due to short-circuiting, causing injury or even death.

c) Overheating of Components: The components may overheat due to heat buildup from neighbor components or due to being trapped in the protective covering without adequate ventilation.

2) Possible Negative Consequences on Safety or

Environment from Incorrect Use of Design

a) Improper Grounding: The system must share a common ground to avoid an electrical hazard (static discharge can damage the sensitive components of the system and potentially harm the user), performance cuts, and interference.

3) Possible Negative Consequences on Safety or Environment from Misuse of Design or Use in an Unintended Manner

a) Unregulated Power Source: If the device is connected to an unregulated power source (or also a power source that contains more power) it may result in the system overheating, posing a fire hazard and resulting in component damage.

4) Possible Design Malfunctions

a) Improper Installation of Plastic Impact Sheet: If the plastic impact sheet is not fixed tensely on to the side opening of the buckle, the strain gauge readings will become inconsistent or may not capture a reading at all. This will result in a non-functioning seatbelt detector that misleads the user.

b*) Electromagnetic Interference:* The cluster of electromagnetic signals from other vehicle systems could result in signal interference and disrupt the communication between the STM boards. This could result in false positives or negatives regarding seatbelt detection. In addition, the microcontrollers may reset or lock up if exposed to high levels of electromagnetic interference, potentially leading to system termination.

VI. Testing and Validation

A. Resistance Change Measurement Accuracy This test aims to check whether the strain gauge functions. When the seatbelt is fastened, the strain gauge generates a change in resistance not equal to 0. When the seatbelt is unfastened, the strain gauge must generate a change in resistance measurable by the STM32. The STM32 must be able to output an ADC value of over 100 when buckled.

1) Test Setup/Environmental Parameters: 2 test cases should be tested. For one, the seatbelt should be buckled and for the other, the seatbelt unbuckled. Conduct this experiment in a non-fluctuating room temperature environment. Ensure other devices and/or metal surfaces are nowhere near the system.

2) Test Inputs: A buckled seatbelt, or an unbuckled seatbelt.

3) Quantifiable Measurement/Pass Criteria: ADC value over 100 when buckled, under 100 when unbuckled.

B. Duration of Alarm System

This test aims to check whether the alarm system meets the required standards of a 90 second duration before stopping.

1) Test Setup/Environmental Parameters: Setup of seatbelt model and input STM board is unnecessary. Connect just the output STM board. In the IDE software, just create the condition of the alarm and LED functioning for 90 seconds. Ensure that the test is conducted in a dark noise-free environment so that the output can be noticed easily.

2) Test Inputs: The duration of the alarm system will be measured with a stopwatch.

3)Quantifiable Measurement/Pass Criteria: The test will record a ±1 second margin of error. Failure is noted if not in this margin around 90 seconds.

C. Alarm System is Set off When Seatbelt not Buckled This test is essential to the design as it tests its main functionality. The alarm system should be set off when the seatbelt is unbuckled (when the change in resistance is equal to 0±0.05 Ω).

1) Test Setup/Environmental Parameters: Set up the whole system. Ensure that the test is run in a non fluctuating, room-temperature environment with no metal surfaces or devices around that could interfere with the components. The seatbelt must be initially buckled. When the test starts, unbuckle the seatbelt.

2) Test Inputs: The resistance change of 0±0.05 Ω should be indicated via the IDE software and therefore, the LED light and the alarm system should start functioning.

3)Quantifiable Measurement/Pass Criteria: A pass will be given if both the LED light and the alarm system turn on. A fail will be received when an output is not observed, and an ADC value over 100 is not recorded.

D. Alarm System is Set off When Unbuckled in Different Climates

This test ensures the universal application of this design in different environments. Since resistance is affected by temperature, this is an essential test as it ensures that the system adapts to changes in the environment.

1) Test Setup/Environmental Parameters: Set up the whole system. There should be 2 test cases: one where the environment is 15 degrees and the other when the environment is 25 degrees. Ensure room temperature does not fluctuate and there are no metal surfaces or devices around that could interfere with the components. The seatbelt must be initially buckled. When the test starts, unbuckle the seatbelt.

2) Test Inputs: The resistance change of 0±0.05 Ω should be indicated, after the algorithm adjusting for temperature difference, and therefore, the LED light and the alarm system should start functioning.

3)Quantifiable Measurement/Pass Criteria: A pass will be given if both the LED light and the alarm system turn on. A fail will be received when an output is not observed, and an ADC value over 100 is not recorded.

References

[1] "Seat Belts | NHTSA," *www.nhtsa.gov*. https://www.nhtsa.gov/vehicle-safety/seat belts#:~:text=Your%20seat%20belt%20is%20crucial

[2] HT Auto Desk, "How long - and loud - is seat belt reminder alarm in your car? Check criterion," *HT Auto*, Apr. 04, 2022. https://auto.hindustantimes.com/auto/news/how-fast and-loud-is-seat-belt-reminder-alarm-in-your-car check-criterion-41649043686631.html .

[3]"Decibel (Loudness) Comparison Chart." Available: https://www.hearingconservation.org/assets/Decibel . pdf

[4]"Evaluate Heaviside Function for Symbolic and Numeric Arguments." Mathworks.com, 2024, www.mathworks.com/help/symbolic/sym.heaviside.html.

[5]RRE Administrator, "Seat belt lock sensing Using Reed Sensors," *Magnetic Reed Switches and Reed Sensors, From RRE!*, Apr. 17, 2014. https://www.reed sensor.com/applications/automotive/seat-belt-lock sensing/

[6]OpenStax, "20.3 Resistance and Resistivity," *pressbooks.online.ucf.edu*, Aug. 2016, Available: https://pressbooks.online.ucf.edu/phy2053bc/chapter/resistance-and-resistivity/

[7]“Strain Gauge & Load Cell Input Transmitters Whitepaper: INTRODUCTION TO STRAIN & STRAIN MEASUREMENT.” Available: https://www.acromag.com/wp content/uploads/2019/10/White-Paper-Intro StrainGauge_699B.pdf

[8]“Strain gauge basics,” *www.youtube.com*. https://www.youtube.com/watch?v=qHi8FPnWP6E (accessed Apr. 26, 2021).

[9]E. W. Weisstein, “Heaviside Step Function,” *mathworld.wolfram.com*. https://mathworld.wolfram.com/HeavisideStepFunction.html

[10]“E-94.” Available: https://www.omega.co.uk/techref/pdf/StrainGage_Measurement.pdf

[11]M. Harris, “An Introduction to Wheatstone Bridges,” *Altium*, Sep. 15, 2020. https://resources.altium.com/p/wheatstone-bridges