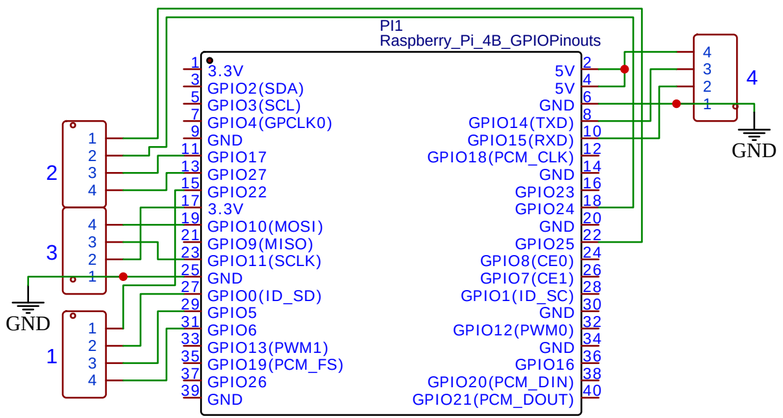

TITLE: RASPI CONNECTOR

REV: 1.0

Jurusan Teknik Elektro Politeknik Negeri Malang

Company: Smartclass D4 POLINEMA

Sheet: 1/3

Date: 2025-04-29 Drawn By: Nizar Fairuzaman

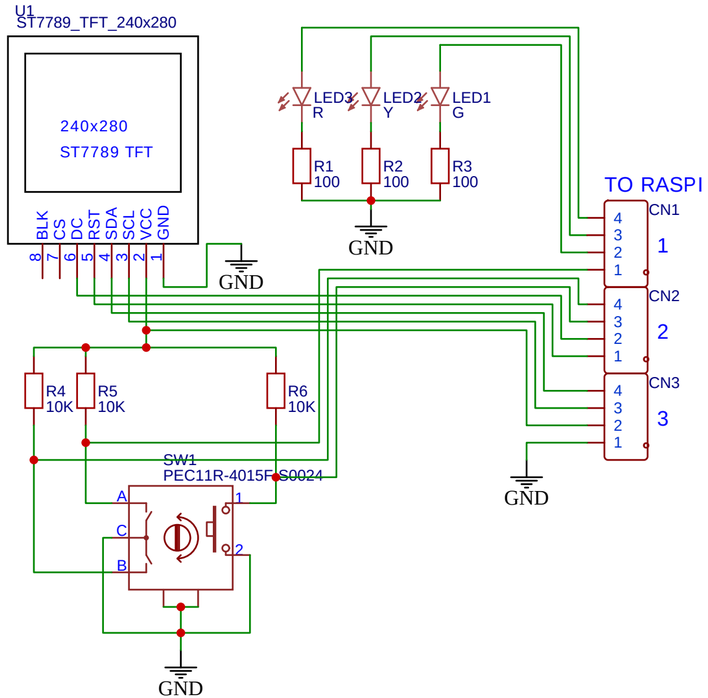

TITLE: PCB FRONT DISPLAY

REV: 1.0

Jurusan Teknik Elektro Politeknik Negeri Malang

Company: Smartclass D4 POLINEMA

Sheet: 2/3

Date: 2025-05-25 Drawn By: Nizar Fairuzaman

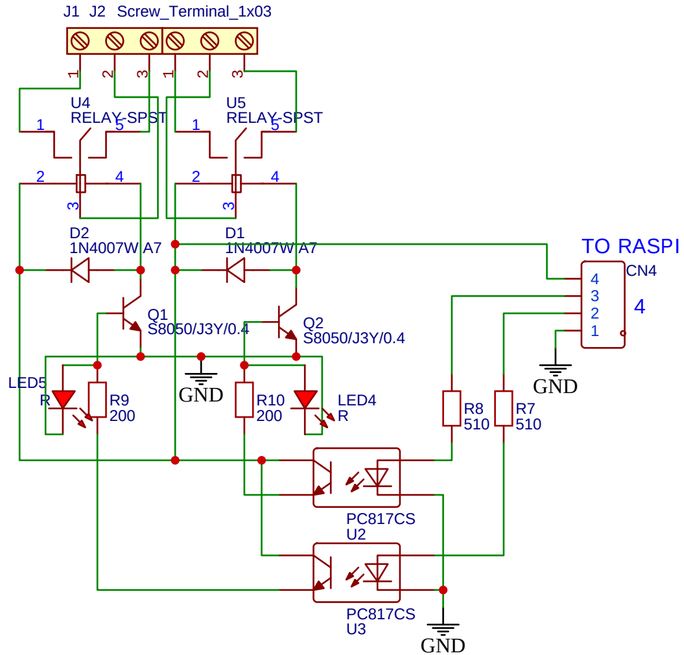

TITLE: PCB RELAY

REV: 1.0

Jurusan Teknik Elektro Politeknik Negeri Malang

Company: Smartclass D4 POLINEMA

Sheet: 3/3

Date: 2025-05-25 Drawn By: Nizar Fairuzaman