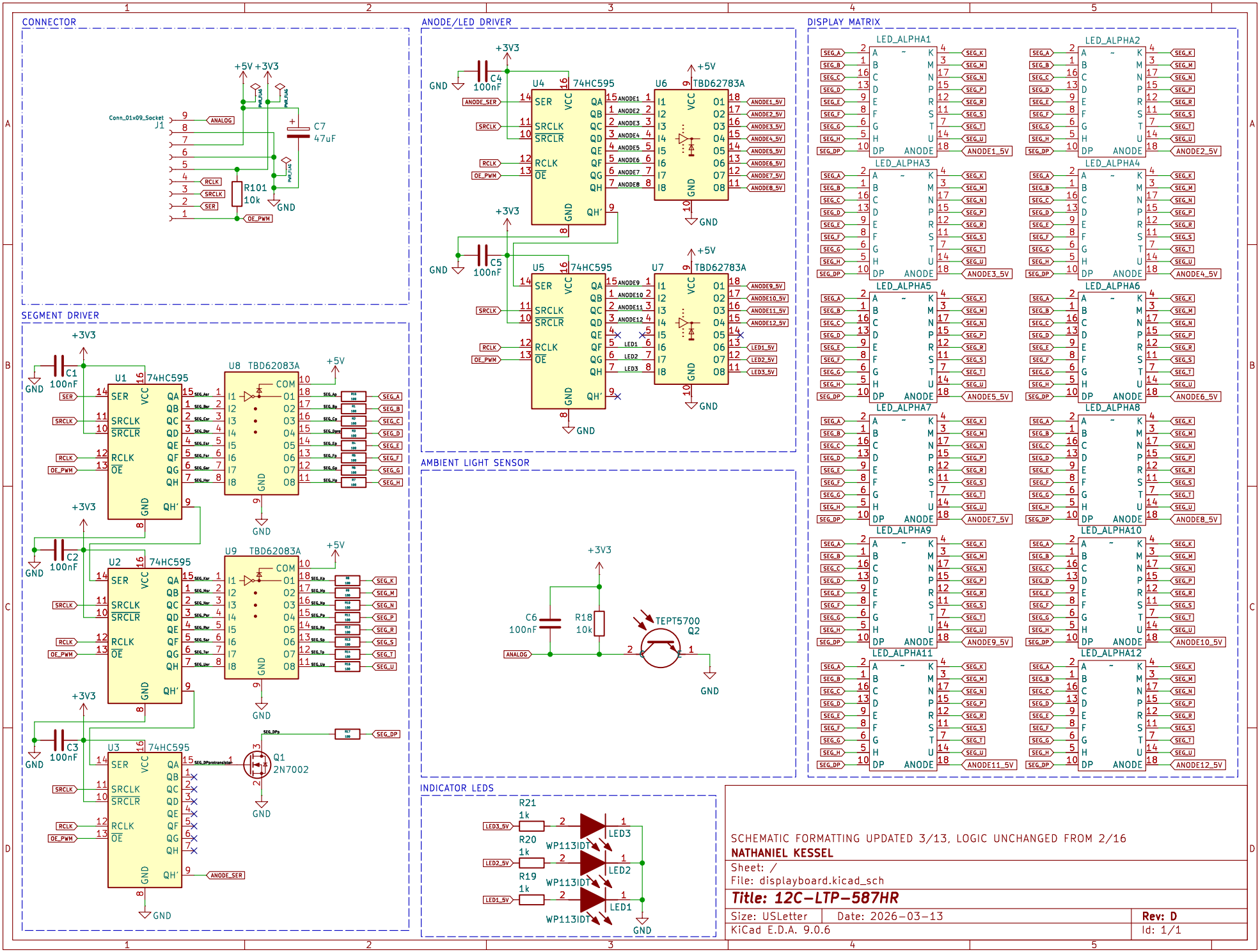
CONNECTOR
Conn_01x09_Socket
J1
+5V +3V3
C7
47uF
R101
10k
GND
ANALOG
RCLK
SRCLK
SER
OE_PWM
SEGMENT DRIVER
U1 74HC595
U2 74HC595
U3 74HC595
U8 TBD62083A
U9 TBD62083A
C1 100nF
C2 100nF
C3 100nF
Q1
2N7002
ANODE_SER
ANODE/LED DRIVER
U4 74HC595
U5 74HC595
U6 TBD62783A
U7 TBD62783A
C4 100nF
C5 100nF
AMBIENT LIGHT SENSOR
C6
100nF
R18
10k
TEPT5700
Q2
INDICATOR LEDS
R21
1k
R20
1k
R19
1k
LED3
LED2
LED1
WP113IDT
DISPLAY MATRIX
LED_ALPHA1
LED_ALPHA2
LED_ALPHA3
LED_ALPHA4
LED_ALPHA5
LED_ALPHA6
LED_ALPHA7
LED_ALPHA8
LED_ALPHA9
LED_ALPHA10
LED_ALPHA11
LED_ALPHA12
SCHEMATIC FORMATTING UPDATED 3/13, LOGIC UNCHANGED FROM 2/16
NATHANIEL KESSEL
Sheet: /
File: displayboard.kicad_sch
Title: 12C-LTP-587HR
Size: USLetter
Date: 2026-03-13
Rev: D
KiCad E.D.A. 9.0.6
Id: 1/1