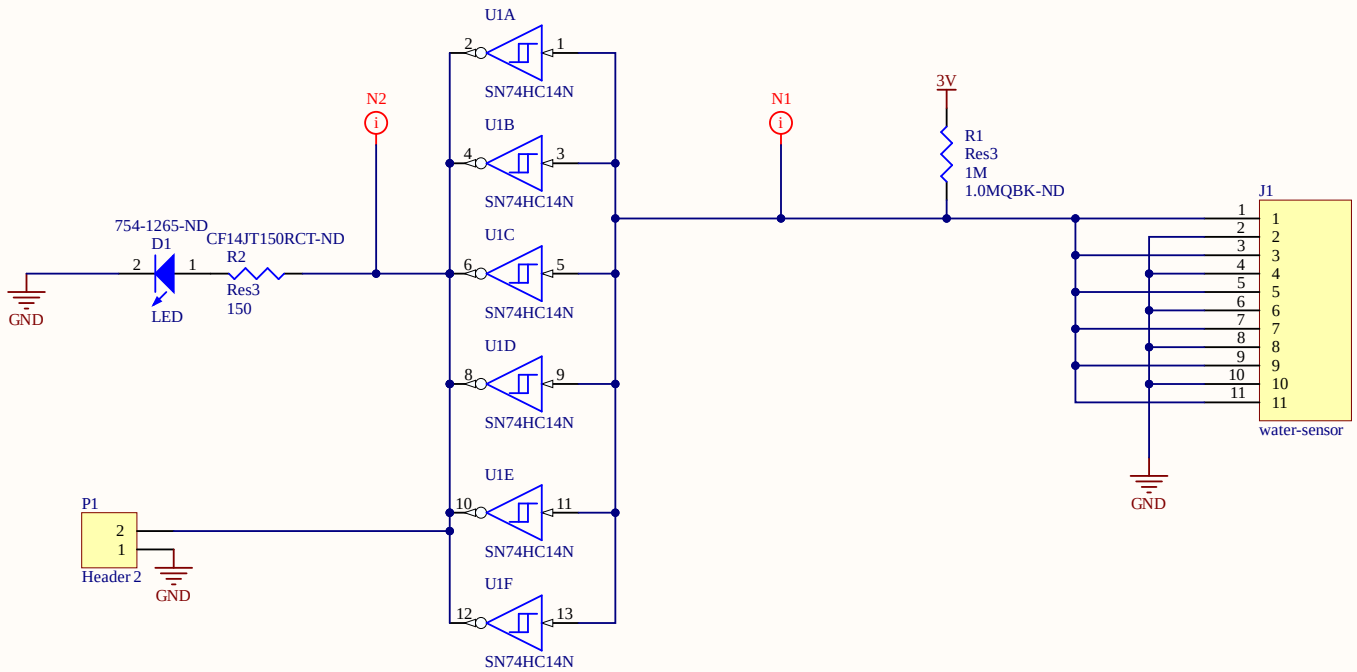

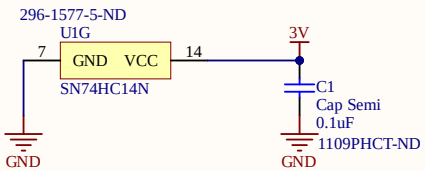

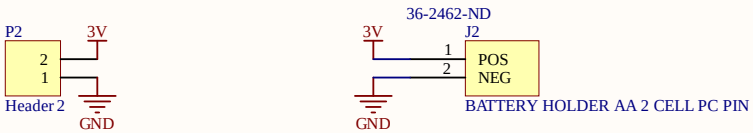

(c) 2019-2020 nj kinar
Design License CERN OHL
Open Hardware
http://cern.ch/cern-ohl

UNIVERSITY OF SASKATCHEWAN
College of
Arts and Science
DEPARTMENT OF GEOGRAPHY AND PLANNING
ARTSANDSCIENCE.USASK.CA

Title		
Size Letter	Number	Revision
Date: 4-19-2020		Sheet of
File: K:\OneDrive\..\sensor-1.SchDoc		Drawn By: