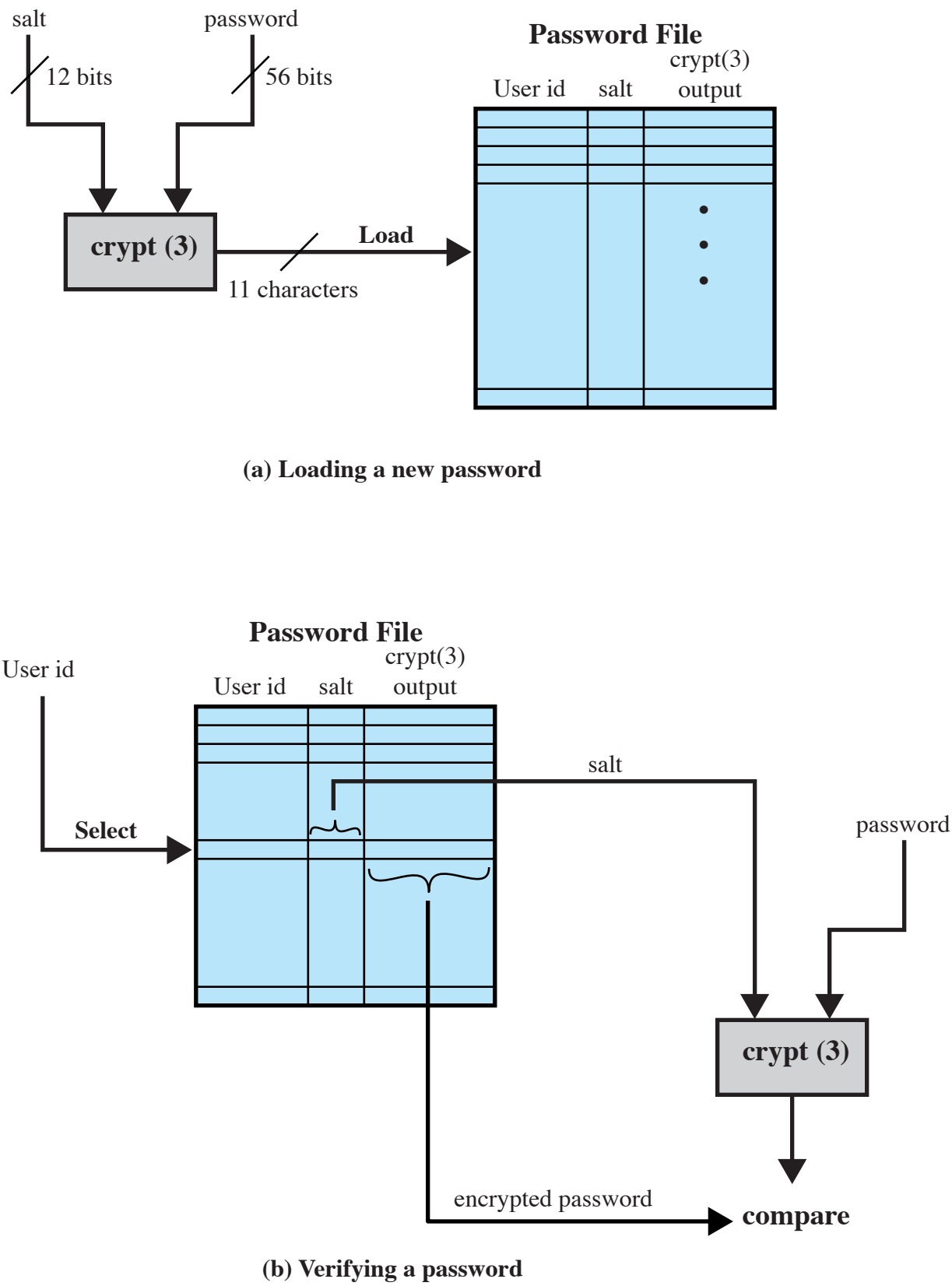

Figure 16.6 UNIX Password Scheme