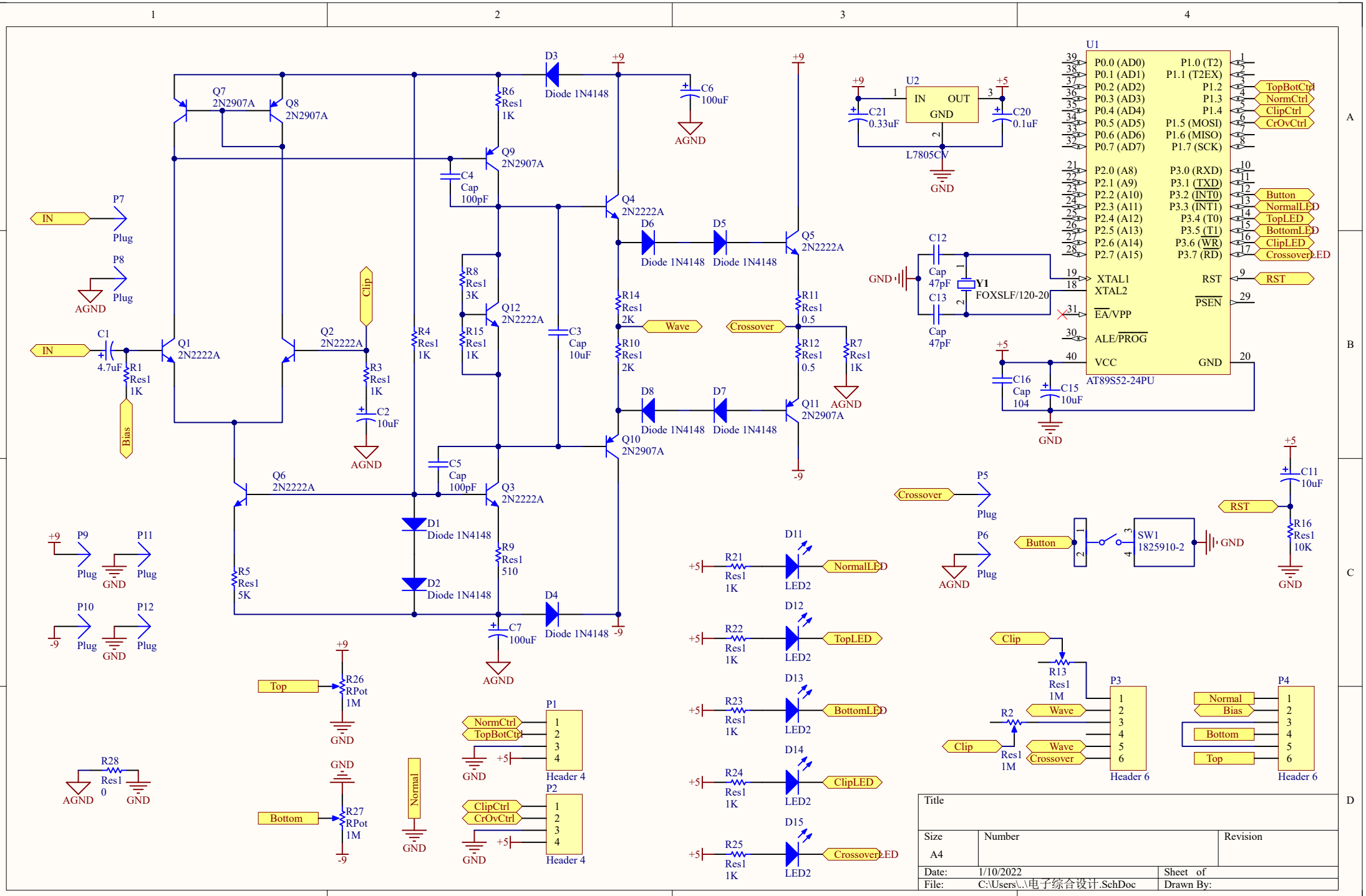

Title		
Size A4	Number	Revision
Date: 1/10/2022		Sheet of
File: C:\Users\..\电子综合设计.SchDoc		Drawn By: