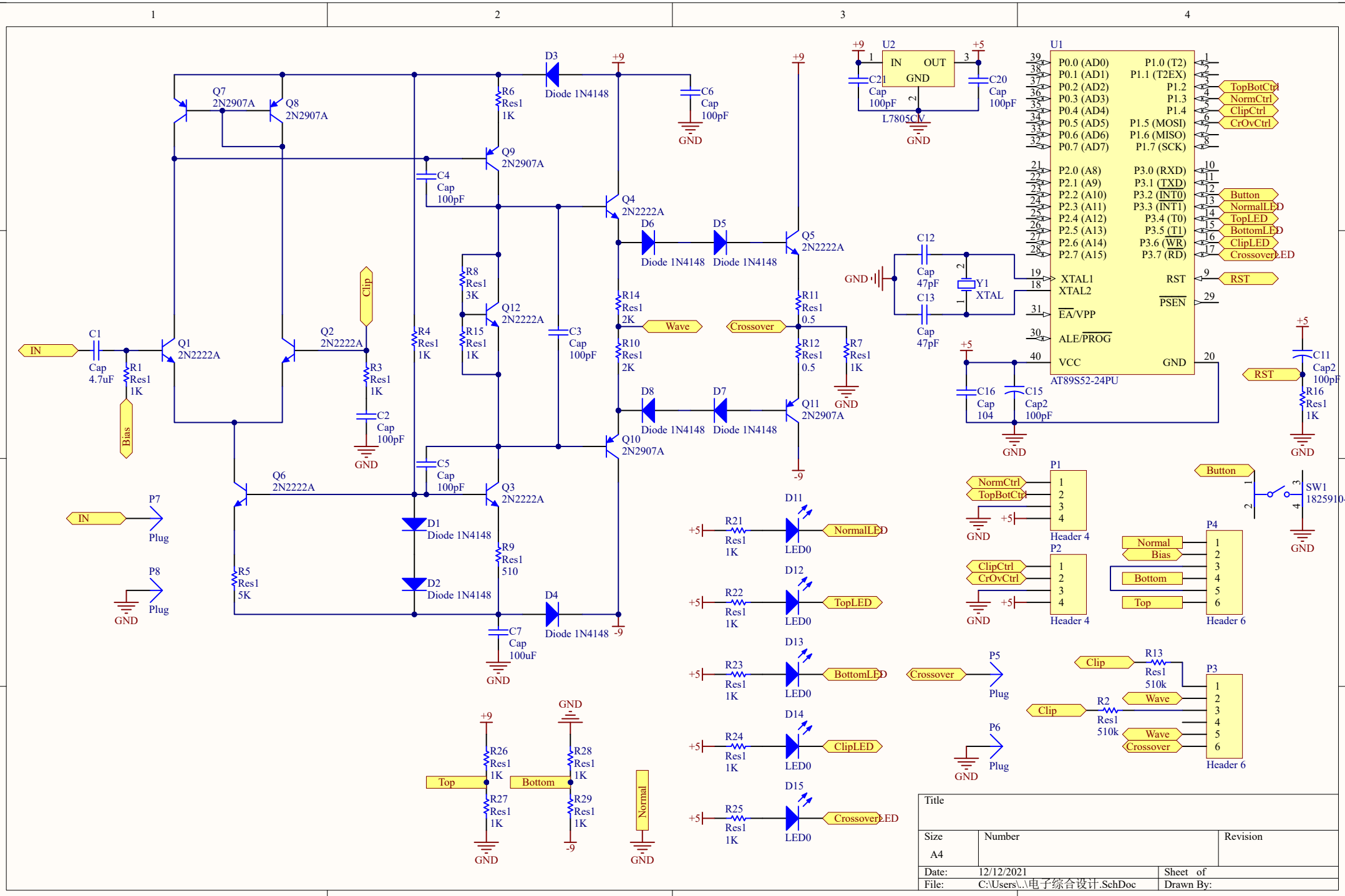
Q7 2N2907A
Q8 2N2907A
Q9 2N2907A
Q1 2N2222A
Q2 2N2222A
Q3 2N2222A
Q4 2N2222A
Q5 2N2222A
Q6 2N2222A
Q10 2N2907A
Q11 2N2907A
Q12 2N2222A
D1 Diode 1N4148
D2 Diode 1N4148
D3 Diode 1N4148
D4 Diode 1N4148
D5 Diode 1N4148
D6 Diode 1N4148
D7 Diode 1N4148
D8 Diode 1N4148
C1 Cap 4.7uF
C2 Cap 100pF
C3 Cap 100pF
C4 Cap 100pF
C5 Cap 100pF
C6 Cap 100pF
C7 Cap 100uF
R1 Res1 1K
R2 Res1 510k
R3 Res1 1K
R4 Res1 1K
R5 Res1 5K
R6 Res1 1K
R7 Res1 1K
R8 Res1 3K
R9 Res1 510
R10 Res1 2K
R11 Res1 0.5
R12 Res1 0.5
R13 Res1 510k
R14 Res1 2K
R15 Res1 1K
R16 Res1 1K
R21 Res1 1K
R22 Res1 1K
R23 Res1 1K
R24 Res1 1K
R25 Res1 1K
R26 Res1 1K
R27 Res1 1K
R28 Res1 1K
R29 Res1 1K
D11 LED0
D12 LED0
D13 LED0
D14 LED0
D15 LED0
U1 AT89S52-24PU
U2 L7805CV
C20 Cap 100pF
C21 Cap 100pF
C11 Cap2 100pF
C12 Cap 47pF
C13 Cap 47pF
C15 Cap2 100pF
C16 Cap 104
Y1 XTAL
SW1 1825910-2
P1 Header 4
P2 Header 4
P3 Header 6
P4 Header 6
P5 Plug
P6 Plug
P7 Plug
P8 Plug
IN
Bias
Clip
Wave
Crossover
Normal
Top
Bottom
NormalLED
TopLED
BottomLED
ClipLED
CrossoverLED
TopBotCtrl
NormCtrl
ClipCtrl
CrOvCtrl
Button
RST
GND
+9
-9
+5
Title
Size A4
Number
Revision
Date: 12/12/2021
Sheet of
File: C:\Users\..\电子综合设计.SchDoc
Drawn By: