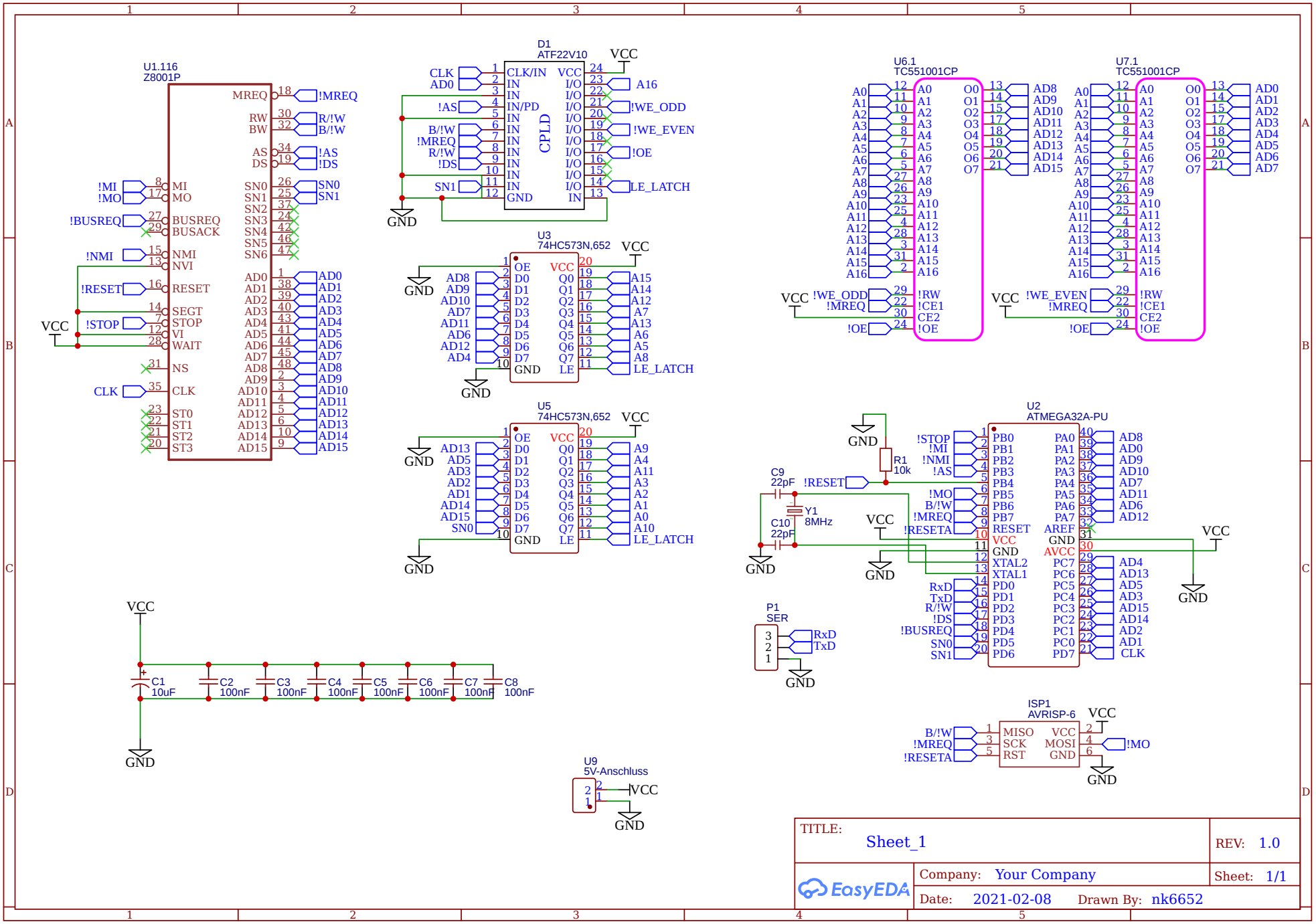
U1.116
Z8001P
D1
ATF22V10
CPLD
U3
74HC573N,652
U5
74HC573N,652
U6.1
TC551001CP
U7.1
TC551001CP
U2
ATMEGA32A-PU
P1
SER
ISP1
AVRISP-6
U9
5V-Anschluss
VCC
GND
C1 10uF
C2 100nF
C3 100nF
C4 100nF
C5 100nF
C6 100nF
C7 100nF
C8 100nF
C9 22pF
C10 22pF
Y1 8MHz
R1 10k
TITLE:
Sheet_1
REV: 1.0
Company: Your Company
Sheet: 1/1
Date: 2021-02-08
Drawn By: nk6652
EasyEDA