Microcontroller
(Raspberry Pi Pico)

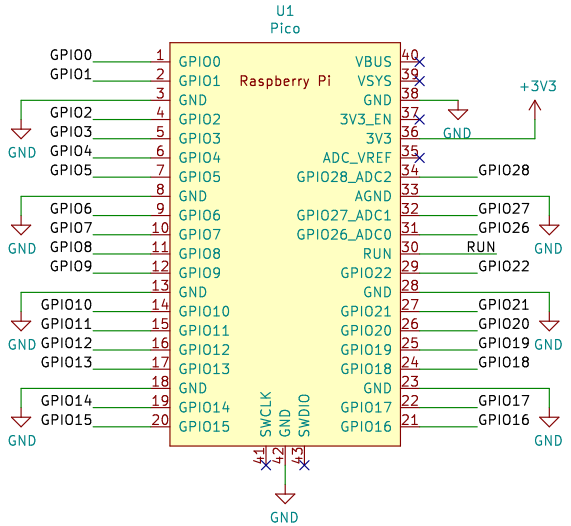

Keyboard Diode / Switch Matrix

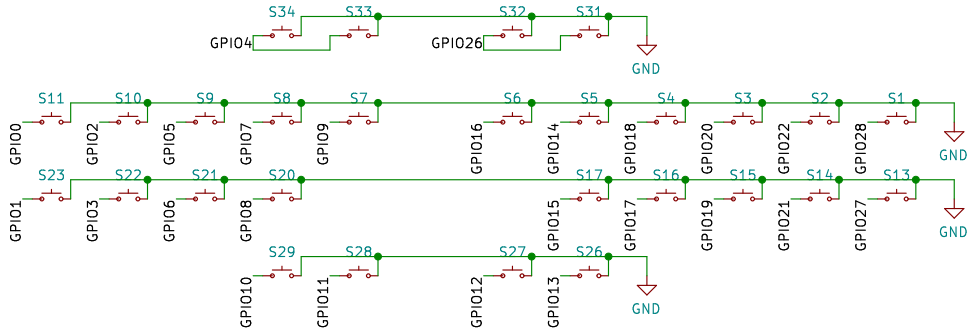

Run Button

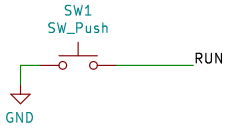

Posts

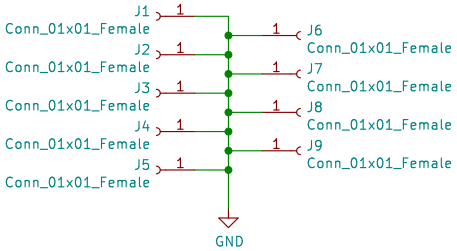

Initial Release: v1.1.0
v1.1.0: Moved Pico inwards by 50 mils
v1.1 vs v1.0: Mechanical change in hole placements

Noll Electronics LLC (nolltronics.com)

Sheet: /
File: PicoSteno-v1.1.0.kicad_sch

Title: PicoSteno

Size: A4	Date: 2023-01-17	**Rev: v1.1.0**
KiCad E.D.A. eeschema (6.0.4)		Id: 1/1