Sabre APIs – PNR Services
Technical Documentation

User Guide

Trip_SearchRQ

Schema Version 4.5.0
March 2020

Reference

Prepared for

Sabre Web Services – PNR Services Clients

Prepared by

Sabre Inc.

Date

11 March 2020

© 2020, Sabre Inc. All rights reserved.

This documentation is the confidential and proprietary intellectual property of Sabre Inc. Any unauthorized use, reproduction, preparation of derivative works, performance, or display of this document, or software represented by this document, without the express written permission of Sabre Inc. is strictly prohibited.

Sabre, the Sabre logo design, and Product Name are trademarks and/or service marks of an affiliate of Sabre Inc. All other trademarks, service marks, and trade names are owned by their respective companies.

• ● •

Document Revision Information

Version	Date	Author	Comments
1.0	Mar 6, 2020	Sabre Team	Document created.

Table of Contents

Document Revision Information iv

Table of Contents v

Overview 7

1.1. Introduction 7
1.2. Purpose 7
1.3. High-level solution concept 8
1.4. Activation 8
1.5. Changes to Trip_SearchRQ after 4.3.0 8

Specification 10

2.1. Searchable data 10
2.2. Service version 10
2.3. Primary and secondary search criteria 11
2.4. Filtering qualifiers 12
Combining many search criteria at a time 12
Match Modes 12
Date & Time criteria 13
2.5. Request and response structures 13
Trip_SearchRQ request message (RQ) 13
Trip_SearchRS response message (RS) 14
2.6. Views 16
2.7. Subject Areas 19
2.8. Past Date PNR searches 20
2.9. Asynchronous searches 22
2.10. Service Security 23
2.11. Performance 24

Request data elements described with samples 25

3.1. Trip_SearchRQ main block 25
3.2. Client Context 26
3.3. PNR Record Locator Search Criteria 26
3.4. Reservation Date Search Criteria 29
3.5. Reservation Search Criteria 31
3.6. Segment Search Criteria 31
3.7. Ticket Search Criteria 33
3.8. EMD Search Criteria 35
3.9. Passegner Name Search Criteria 35

3.10. Email Search Criteria 41
3.11. Service Search Criteria 42
3.12. Document Search Criteria 42
3.13. OSI Search Criteria 43
3.14. Profile Search Criteria 44
3.15. Phone Search Criteria 45
3.16. Frequent Flyer Search Criteria 46
3.17. Flight Details Search Criteria 47
3.18. POS Search Criteria 49
3.19. Destination Search Criteria 50
3.20. Token Criteria 51
3.21. Result Action 51
3.22. Return Options 52

Complete payload samples 53

4.1. Sample RQ/RS for STL file format 53

Error and warning messages 55

5.1. List of Codes 55
5.2. Samples 56

Glossary 58

Technical Support 59

7.1. Telephone 59
7.2. Email 61
7.3. Links 62

Overview

1

1.1. Introduction

This guide is for architects and developers to learn how to compose XML formatted requests for Trip_SearchRQ service version 4.5.0. The document may be beneficial for business users as it contains a couple of service request samples presenting use cases.

The User Guide describes the Trip_SearchRQ 4.5.0 current functionalities. Some of the search options may require dedicated activations, what is mentioned in this specification accordingly. The baseline pre-requisite for using Trip_SearchRQ is having PNRs stored in the Trip Services databases.

This chapter contains general information about the service. In chapter 2 the available search capabilities available, both for the Sabre Airline carriers and Sabre Travel Network users. Chapter 3 presents the search criteria in more details, with use cases attached. In the next chapter there is a list of error and warning messages that Trip_SearchRQ may produce. At the end of the User Guide you can find a glossary of terms used, as well as how to reach Technical Support, if needed.

Both WSDL and XSD files are published separately to the User Guide, although those files are complementary to this document. The complete requests and responses are published separately too.

1.2. Purpose

Once a PNR has been created on the Sabre Host, the Trip_SearchRQ web service offers functionality to allow the Airline or Agency to search for bookings by many different criteria. The service can be used as an alternative to host searches available in native Sabre system, however the capabilities of Trip_SearchRQ service are a little bit different and more complex.

Trip_SearchRQ allows you to search for most common data elements that are in a PNR. It is a highly efficient solution that is designed for maximum reliability.

The main goals of Trip_SearchRQ service is to search for the bookings. If you are interested in retrieving PNR data only having the PNR locator already known, it might be an option to use GetReservationRQ service alternatively.

1.3. High-level solution concept

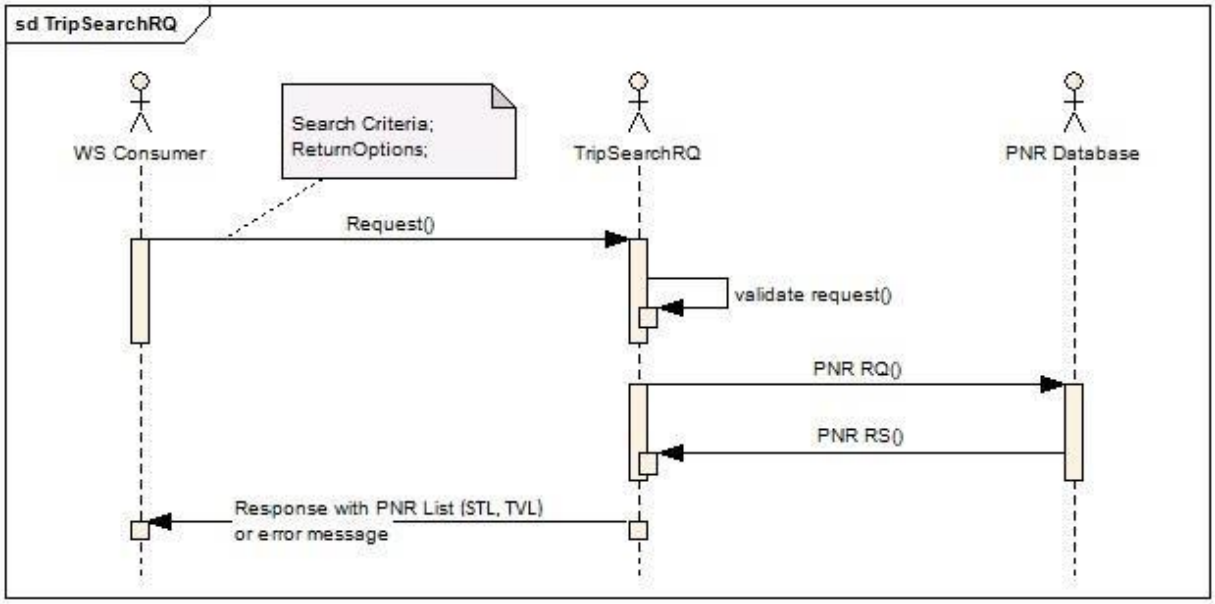

1.4. Activation

Before you start using Trip_SearchRQ service in the production environment, we do recommend contacting our Technical Support. It will allow us setting up the service fit for your purposes and to ensure the search process will run smoothly.

1.5. Changes to Trip_SearchRQ in 4.5.0

The following is changing in Trip_SearchRQ 4.5.0 User Guide when compared to the recent previous version of the service:

- In version 4.5.0 Trip_SearchRQ uses STL format version 1.19
- For all Trip_SearchRQ versions we introduced a default limit of 800 PNRs in the response, unless defined differently in the request view (@ViewName).

  In Trip_SearchRQ it will not be allowed to receive more than 800 items in the response. If you request more with use of the attribute MaxItemsReturned, the response will be throttled by the application.

  The following warning messages will be returned in case of improper usage of the API:

  1. ***"Max number of requested PNRs exceeded view limit [800]"*** – appears if user requests more PNRs than allowed by the ViewName (e.g. 800) but there are less results. All results will be returned in the response.

2. ***"Number of results exceeded view limit or requested PNRs limit"*** – appears if there are more results than allowed in the response. The number of presented results will be truncated to 800. If you wish to receive more results in the response, please use the asynchronous search. To activate the asynchronous search, please contact your Sabre Representative.

Specification

2

2.1. Searchable data

When using Trip_SearchRQ there are certain PNR elements that have been stored in the database to allow PNR searching and retrieving. The following chart shows the PNR data that have been stored for searching. Sabre uses Sabre Airline Solutions (AS) for Carrier data and Sabre Travel Network (TN) for Agency data.

Element	Searchable for AS/TN DB		Description
NAME	AS	TN	Passenger data
NAME_HSTRY	AS	TN	Passenger data history
ITIN	AS	TN	Air segment data
ITIN_HSTRY	AS	TN	Air segment data history
CAR	AS	-	Car segment data
HOTEL	AS	-	Hotel segment data
PHONE	AS	TN	Passenger's phone number
EMAIL	AS	TN	Passenger's email address
LOYALTY	AS	TN	Passenger's frequent flyer data
FACTS	AS	-	Special Service Request code (SSR) is used by airlines to capture information requests from the carrier that require some sort of action to be taken. Some SSR codes are used across the air travel industry, and some are airline specific.
TICKETS	AS	TN	Ticket details
PROFILE	-	TN	Passenger's profile
SEGMENT	AS	TN	Car, rail and hotel segment data
SEGMENT_HSTRY	AS	TN	Car, rail and hotel segment data history
DOCUMENTS	AS	TN	Passenger's documents like national id card, driver license, passport
DESTINATION	AS	TN	Departure/arrival data

2.2. Service version

Trip_SearchRQ 4.4.0 service must be invoked having the "4.4.0" version specified in the request. The version attribute value should not contain any additional prefixes nor suffixes. Only digits and dots should be provided as version attribute value.

The default service version is always the most recent available version.

```
<Trip_SearchRQ Version="4.5.0" ... >
...
</Trip_SearchRQ>
```

2.3. Primary and secondary search criteria

User needs to specify at least one Primary search criteria in the search request. All other criteria are named Secondary, and are optional. Trip_SearchRQ call without any Primary criteria will result in "There is no primary criteria specified" error response.

The following is the list of primary search criteria that can be used in the service request:

- LocatorCriteria/Locator/Id
- DateCriteria/UpdateDate
- NameCriteria/LastName
- TelephoneCriteria/PhoneNumber
- EmailCriteria/EmailAddress
- TicketCriteria/TicketNumber
- EMDCriteria/EMD/EMDNumber/EMDType
- LoyaltyCriteria/Loyalty/ProgramID
- ProfileCriteria/Profile/ProfileID
- FlightCriteria/Flight/DepartureAirport
- FlightCriteria/Flight/DepartureCountry
- FlightCriteria/Flight/DepartureCity
- FlightCriteria/Flight/ArrivalAirport
- FlightCriteria/Flight/ArrivalCountry
- FlightCriteria/Flight/ArrivalCity
- FlightCriteria/Flight/FlightNumber;
- FlightCriteria/Flight/MarketingFlightNumber;
- FlightCriteria/Flight/OperatingFLightNumber;
- FlightCriteria/Flight/DepartureDateTime;
- FlightCriteria/Flight/AirlineCode
- FlightCriteria/Flight/MarketingAirlineCode;
- FlightCriteria/Flight/OperatingAirlineCode;

Primary search criteria cannot be used in combination with MatchMode="ANYWHERE" and "END". If used, following error response will appear: "There is no primary criteria specified".

2.4. Filtering qualifiers

Combining many search criteria at a time

Most search criteria in the request payload are in 'AND' relation, which means that the PNR response will be accordingly narrowed down. The exception to this rule is an option to provide multiple PNR record locators at a time that may result in returning many bookings in the response. Please review the WSDL and XSD files for more details.

When a combination of search criteria returns "Too many results" message, it usually means the search criteria are too weak. In the service request, it is possible to specify the MaxItemReturned attribute too. Given the boundary for maximum number of results reached, the mentioned message occurs. Please note that the service engine tries to predict the number of results prior to producing the response. If the number of expected results is huge, the service response may contain the indicated warning message too. In case of such warning messages, please adjust the request payload.

Match Modes

For several search criteria MatchMode attribute is defined. It means that searching engine is not constrained only to EXACT searches but provides also START, END, ANYWHERE, SIMILAR, EXACT_NO_COMPRESS search capabilities as well. There may be a different set of MatchMode options for each filtering criteria.

MatchMode option	Description
EXACT	EXACT searches for spelling based on compressed names (without white spaces) e.g., a search for the LastName Mc Donald would have an entry that looks like `<LastName MatchMode="EXACT">MCDONALD</LastName>`
START	START would be used to search without spelling the entire word out (in Native Sabre this search is using wildcard characters) e.g., `<LastName MatchMode="START">SM</LastName>`

END	END can return a very large amount of data which will cause the return to error. It can be used as a secondary condition to limit the number of responses e.g., searching for the names SMYTH/ME (SMYTH/FIRSTNAME, SMYTH/KIME, SMYTH/NAME etc)
	`<FirstName MatchMode="END">ME</FirstName>`
	`<LastName MatchMode="EXACT">SMYTH</LastName>`

ANYWHERE	ANYWHERE can return a very large amount of data which will cause the return to error. It can be used as a secondary condition to limit the number of responses e.g., searching for the names SMYTH/ME (SMYTH/FIRSTNAME, SMYTH/NAME, SMYTH/MENU, SMYTH/JAMES etc.). MatchMode ANYWHERE cannot be used in combination with Primary Search Criteria.

	`<FirstName MatchMode="ANYWHERE">ME</FirstName>` `<LastName MatchMode="EXACT">SMYTH</LastName>`
SIMILAR	SIMILAR lets you compare words that are spelled differently, but sound alike in English (SMITH and SMYTH). `<LastName MatchMode="SIMILAR">SMITH</LastName>`
EXACT_NO_COMPRESS	EXACT_NO_COMPRESS looks for spelling based on non-compressed names (with white spaces) e.g., a search for the LastName of Mc Donald would have an entry that looks like `<LastName MatchMode="EXACT_NO_COMPRESS">MC DONALD</LastName>`

Date & Time criteria

DateTime format is using the following format specified by ISO 8601

`YYYY-MM-DDThh:mm:ss`

with time values using the 24-hour clock (e.g. 20 November 2003, 1:59:38 pm UTC becomes 2003-11-20T13:59:38Z). Time format follows the pattern HH:MM:SS

"After", "Before" and "Is" match modes accept DateTime format. "TimeAfter", "TimeBefore" and "TimeIs" accept Time format only. In case of the "Is" attribute the time isn't taken into consideration in search logic because the time is truncated.

2.5. Request and response structures

Trip_SearchRQ request message (RQ)

An overview on the Trip_SearchRQ service design, with the key XML sections highlighted, is presented below. Please use TripSearchSoapBinding for Trip_SearchRQ. For more information please refer to next paragraphs as well as to the corresponding WSDL and XSD files.

HEADER:

It contains e.g. BinarySecurityToken obtained when authorizing user's web service session.

BODY:

<Trip_SearchRQ> required block, some its attributes like Version are required too.

<ClientContext> optional block

<ReadRequests> required block

<ReservationReadRequest> required block

Specific filtering rules, where at least a single primary filtering criteria is required. Each block may contain additional sub-blocks and additional attributes.
Sections: <LocatorCriteria>, <DateCriteria>, <ReservationCriteria>, <SegmentCriteria>, <TicketCriteria>, <EMDCriteria>, <NameCriteria>, <EmailCriteria>, <ServiceCriteria>, <DocumentCriteria>, <OsiCriteria>, <RemarkCriteria>, <ProfileCriteria>, <TelephoneCriteria>, <LoyaltyCriteria>, <FlightCriteria>.

Some of the criteria may be specific for Airline or Agencies searches hence some criteria combination may result in empty or inappropriate responses.

<PosCriteria> required block
In this section it will be determined what airline partition will be searched, or what travel agencies will be in scope.

<DestinationCriteria> optional block

<TokenCriteria> optional block

<PreviousSearch> optional block

<ResultAction> optional block

<ReturnOptions> mandatory block. It is required to provide here e.g. view name and response format. This is the place to specify STL as response format.

<SubjectAreas> optional blocks, if needed and supported by given view

Trip_SearchRS response message (RS)

The response is an XML file that contains list of PNRs with details. Unless no PNRs meeting the search criteria an empty list is returned. PNR data which might be present in response message depends also on the security defined by ViewName which is required for each service request.

Trip_SearchRQ 4.5.0 service supports the following schema version for below formats composing the response message:

- STL – 1.19.0

The response format is required in the web service request. It must be either STL file format and it should be supported by the view used.

```
<Trip_SearchRQ ... >
<ReadRequests>
<ReservationReadRequest>
...
```

```
<ReturnOptions ResponseFormat="STL" ... />
</ReservationReadRequest>
</ReadRequests>
</Trip_SearchRQ>
```

For more information please refer to corresponding XSD files and review the samples published separately to this document

2.6. Views

It is required to provision the view name with every web service request. The view determines especially what dataset will be searched and how the response will be organized. All standard views are presented in the table below. Additional comments below the table.

View Name	Business Area	View Type	Allow Custom Subject Areas	Default Subject Areas	Supports search by Migrated Locator	Search for inactive PNRs	isLimit	isCount	Supported formats	Response limitation
TripSearch	AS	DB	N	Record Locator	N	Y	N	Y	STL	800
TripSearchTN	TN	DB	N	Record Locator	N	Y	N	Y	STL	800
TripSearchBlob	AS	BLOB	N	All Active (STL does not show ARNKs and OPEN segments)*	Y	Y	N	Y	STL	800
TripSearchBlobTN	TN	BLOB	N	All Active	N	Y	N	Y	STL	800
TripSearchBlobLimitSimple	AS	BLOB	Y	HEADER	N	N	Y	N	STL	800
TripSearchBlobLimitFull	AS	BLOB	N	All Active (STL does not show ARNKs and OPEN segments)*	N	Y	Y	N	STL	800
TripSearchBasic	AS	BLOB	N	HEADER, NAME, PHONE, PASSENGERDETAILS	N	Y	Y	N	STL	800
TripSearchBlobX	AS	BLOB	N	All Active	N	Y	N	Y	STL	800
TripSearchBlobXFull	AS	BLOB	Y	All Active	N	Y	N	Y	STL	800
FlightSearch	AS	BLOB	Y	All Active + Historical (STL does not show ARNKs and OPEN segments)*	N	N	N	Y	STL	800
FlightSearchActive (search for PNRs with active flights)	AS	BLOB	Y	All Active + Historical (STL does not show ARNKs and OPEN segments)*	N	Y	N	Y	STL	800
FlightSearchHistory (search for PNRs with cancelled flights)	AS	BLOB	Y	All Active + Historical (STL does not show ARNKs and OPEN segments)*	N	Y	N	Y	STL	800
Simple	AS	BLOB	Y	HEADER	N	Y	N	N	STL	800

Default	AS	BLOB	N	All Active (STL does not show ARNKs and OPEN segments)*	N	Y	N	N	STL	800
DefaultX	AS	BLOB	N	HEADER Active	N	Y	N	N	STL	800
Full	AS	BLOB	N	All Active + Historical (STL does not show ARNKs and OPEN segments)*	N	Y	N	N	STL	800
FullX	AS	BLOB	N	All Active + Historical	N	Y	N	N	STL	800
PastDate-AS	AS	BLOB	Y	All Active + Historical	N	Y	N	Y	STL	800
PastDate-TN	TN	BLOB	Y	All Active + Historical	N	Y	N	Y	STL	800

* STL does not show ARNKs and OPEN segments for some View Names listed in the table above. This functionality is consistent with previous Trip_SearchRQ versions.

Descriptions of headers for the above table:

- **View Name** – this is the name that should be specified in the request. View name is case-sensitive.
- **Business area** - it can be either AS or TN. The view type will indicate the search will be applied on AS or TN database accordingly. It does not limit the option e.g. to get TN PNRs through AS PNR record locator provisioning. This is a technical information that does not have to be specified in the web service request.
- **View Type** – it can be either DB (Trip DB tables) or BLOB (data file blob) and it determines what data is retrieved. The DB views are usually faster, but they allow returning less data elements in the response. This is a technical information that does not have to be specified in the web service request.
- **Allow Custom Subject areas** – for selected views it is possible to determine what types of data are presented in the web service response by defining SubjectAreas in the request.
- **Default Subject Areas** – there are some pre-defined areas exposed in web service responses. For the complete sets of Active/Inactive subject areas please review one of the next sections. There is also the explanation of each subject area.
- Few View Names allow to show the PNR History in the Trip_Search response**.** The history display content may differ depending on the selected View Name.
- **Supports search by Migrated Locator** – Migrated Locator identifies a PNR which was converted to Sabre from a different GDS. Searches by migrated record locators are available for selected views only and upon a quest for specific carriers only.
- **isLimit** – the flag "Y" means that there is a limitation on the size of the database results set available prior to producing the final response, "N" means the limitation on the number of PNRs is applied to the final response.

- **isCount**- the flag "Y" means that the count query is performed before database search to detect or exclude potentially long running searches.
- **Supported formats** – list of response formats supported for given view. See the section describing response formats to get more details.
- **Response limitation** – presents maximum number of PNRs allowed to be returned in the response in specified view.

Additional details of the most popular views offered:

- **TripSearch** and **TripSearchTN** views are the simplest views. Use one of those views to get a list of PNR record locators that meet the search criteria defined in the web service request. Having the list of PNR locators you can invoke GetReservationRQ service to get all the details. Use one of those views also if you need only a specific PNR data element through specifying the subject areas you are interested in.
- **TripSearchBlob** – it is a popular view for Sabre Airline Solutions providing multiple PNR data elements in the response.
- **TripSearchBlobXFull** – it is a popular view for Sabre Airline Solutions. This view can return both Past Date and Active PNRs as SearchType attribute is ignored.
- **TripSearchBlobTN** – it is the most popular view for Sabre Travel Network providing multiple PNR data elements in the response.
- **Full** – Displays full PNR including PNR history (STL without ARNKs and OPEN segments).
- **FullX** – Displays full PNR without inactive segments (STL without ARUNKs, OPEN segments).
- **PastDate-AS** – this view is dedicated to retrieve Past Date PNRs for AS, however Past Date PNRs can be searched with other AS views too.
- **PastDate-TN** – this view is dedicated to retrieve Past Date PNRs for TN, however Past Date PNRs can be searched with any other TN view described in this document.

Each view, if permitted, can be extended by SubjectAreas. Information from SubjectAreas will be provided in response message if they were stored in PNR. The most common views and SubjectAreas are listed in the next section. For those clients that require specific custom-made searches with either new views or subject areas, or both, please contact our Technical Web Service Support.

2.7. Subject Areas

The Subject Areas define what parts of PNR data can be additionally presented in the web service response. Provisioning of Subject Areas in the web service request is optional. Unless Subject Areas are specified in the request, the default Subject Areas are applied. Subject Areas can be only applied to BLOB views.

The following are the supported Subject Areas for BLOB views:

Subject Area Identifier	Description
HEADER	PNR header (rloc and create date are minimum possible to return, based on file format). It is always present.
RECORD_LOCATOR	PNR Record locator (rloc)
NAME	Passenger Name
RECEIVED	Received from
PHONE	Phone number(s)
FQTV	Frequent Traveler Number
EXT_FQTV	External Frequent Traveler Number
ADDRESS	Address data
DKNUMBER	Customer number - agencies use the DK number primarily as an account reference identifier for billing purposes
CUST_INSIGHT_PROFILE	Customer Profile Number
CORPORATE_ID	Agency ID for corporate client
PASSENGERDETAILS	Profile data, passenger type, email address
PRERESERVEDSEAT	Pre-reserved seat data
AFAX	All facts stored in the PNR
GFAX	General facts stored in PNR
REMARKS	All remarks in PNR
BSGPROCESSING	Block Space Group information. Not a standard offering.
ACCOUNTING_LINE	Agency accounting line(s). Not a standard offering.
ITINERARY	Full itinerary including Air, Car, Hotel etc. *the " full itinerary" can only be presented in xml response when using BLOB search.

2.8. Past Date PNR searches

The Past Date PNR searches allow to look for PNRs which are no longer available to users and have been purged from the system.

Past Date PNR search is a standard offering for travel agencies (TN) and does not require additional activation.

This functionality is made available to all airlines however, it is not a standard offering and requires customer activation.

The Past Date PNR search is narrowed down using SearchType="INACTIVE" option present in the ReturnOptions tag of the Trip_SearchRQ. You can specify whether the search should be done against active or Past Date PNRs.

The allowed values for the SearchType option within the ReturnOptions Trip_SearchRQ tag are presented in the following table. This attribute is optional; if provided, a single value can be assigned.

Search Type	Definition
ACTIVE	Use this option to search for active PNRs only.
INACTIVE	Use this option to search for Past Date PNRs only.

BOTH	Use this option to search across the sets of both active and Past Date PNRs.

To search Past Date PNRs by PNR record locator, you must specify in the request both the PNR locator and PNR creation date. PNR creation date needs to be specified with time, as follows: T00:00:00. The 00:00:00 will cover PNRs created at any time of the indicated date.

USE CASE

Given the AS's PNR record locator known, retrieve AS's Past Date PNRs created on 06 March 2017 in LA partition. If there is such PNR, its details will be returned in the response. The same use case can be done through GetReservationRQ service too.

Request:

```
<Trip_SearchRQ   Version="x.x.x"   xmlns="http://webservices.sabre.com/triprecord">
<ReadRequests>
<ReservationReadRequest>
   <LocatorCriteria>
            <Locator  Id="EFXBMB"  CreateDate="2017-03-06T00:00:00"/>
         </LocatorCriteria>
   <PosCriteria AirlineCode="LA"/>
   <ReturnOptions  MaxItemsReturned="100"
                   ResponseFormat="STL"
                   ViewName="Full"
                   SearchType="INACTIVE"/>
</ReservationReadRequest>
</ReadRequests>
</Trip_SearchRQ>
```

Past Date PNRs are identified by indicator PastDate="true" in Trip_Search response for both TN and AS in all available view types.

Response:

```
<Trip_SearchRS Version="x.x.x" ... >
<Success>Success</Success>
<ReservationsList  NumberResults="1"  NumberPages="1"  TotalResults="1">
   <Reservations>
   <Reservation Locator="EFXBMB" PastDate="true">
   ...
   </Reservations>
</ReservationsList>
</Trip_SearchRS>
```

2.9. Asynchronous searches

The asynchronous searches are dedicated for the long running searches that in normal (synchronous) mode could result in timeouts. The asynchronous search mode is enabled on search view configuration level. Although the asynchronous searches support long running queries, there is a limit on the number of such queries invoked per hour.

All the standard views are not asynchronous; however, it is possible to request an asynchronous one as a special service. If you are interested in such kind of searches please contact Technical Support / Development Team.

The samples / use cases presented below uses the following keywords:

- <async_search_view> - search view name with enabled async search option. For async mode there is also possibility to enable pagination of the result, it is enabled from search view configuration level.
- PageSize attribute from ReturnOptions – it allows control of the size of page in case of pagination enabled, it is optional and default size could be customized on search view level by Dev team. The pagination is supported for all asynchronous views and only for asynchronous views.

USE CASE

Search using name criteria while there are only three first characters of passenger last name provided. This is a popular scenario that may end with a timeout. Thus, for such cases an asynchronous search could be applied.

```
<Trip_SearchRQ Version="x.x.x" ...>
<ReadRequests>
<ReservationReadRequest>
   <NameCriteria>
   <Name>
      <LastName MatchMode="START">SMI</LastName>
   </Name>
   </NameCriteria>
   <PosCriteria AirlineCode="B6"/>
   <ReturnOptions   MaxItemsReturned="10000"
                  ResponseFormat="STL"
                  PageSize="5"
                  ViewName="<async_search view>">
      <SubjectAreas>
         <SubjectArea>HEADER</SubjectArea>
         <SubjectArea>NAME</SubjectArea>
      </SubjectAreas>
</ReturnOptions>
</ReservationReadRequest>
</ReadRequests>
</Trip_SearchRQ>
```

The token is returned in the response for the above request. The token will be used in next step to retrieve piece of the result (if pagination is supported) or whole result.

```
<Trip_SearchRS Version="x.x.x" ... >
<Success>Success</Success>
   <ReservationsList      Token="dec6c835 -c7ec-4033-a5ff-efc95f70f4ea">
   <Reservations/>
</ReservationsList>
</Trip_SearchRS>
```

Now let's get second page, using Page element from TokenCriteria.

Request:

```
<Trip_SearchRQ Version="x.x.x" ... >
<ReadRequests>
<ReservationReadRequest>
   <TokenCriteria>
      <Token>dec6c835-c7ec-4033-a5ff-efc95f70f4ea    </Token>
      <Page>2</Page>
   </TokenCriteria>
   <ReturnOptions ViewName="<sync_view_name>" />
</ReservationReadRequest>
</ReadRequests>
</Trip_SearchRQ>
```

Response:

```
<Trip_SearchRS Version="x.x.x" ... >
<Success>Success</Success>
<ReservationsList NumberResults="5" NumberPages="145" TotalResults="725">
   <Reservations>
   ...
   </Reservations>
</ReservationsList>
</Trip_SearchRS>
```

USE CASE

The asynchronous search is performed by Trip application in the "background", so in case of requesting result for the search that isn't completed and its result ready then the following error response is returned.

```
<Trip_SearchRS Version="x.x.x" ... >
<Errors>
   <Error ErrorCode="200302" Severity="MODERATE" ErrorMessage="Response is not ready
yet"/>
</Errors>
</Trip_SearchRS>
```

2.10. Service Security

The PNR search options are available only to authorized users that provided a valid token in the web service request. For most service views, the Trip_SearchRQ supports branch access and global branch access rules in a consistent manner as the native Sabre application.

Users can retrieve data only from the partitions and/or pseudos they have access to. In a common case it means that a user of given Airline cannot access data of any other carrier unless it is allowed in the native Sabre system.

There are viewership rules implemented in the service, although Trip_SearchRQ does not inherit the viewership rules from the native Sabre application automatically.

The authorization based on OACs (Office Accounting Codes) is not supported with the service.

2.11. Performance

Search criteria defined in this User Guide should work in less than a few seconds. For the search queries that lasts a longer than 20 seconds, the queries will be cancelled, and a timeout will be returned to the client.

For those clients that require long running queries we have a semi real time request, token-based option (see a section describing asynchronous searches). Please contact out Technical Support if you found any performance issues with the service.

Request data elements described with samples

3

3.1. Trip_SearchRQ main block

Elements:	ClientContext, ReadRequests
Attributes:	ConversationID; Compression; EchoToken; TimeStamp; Target; Version; SequenceNumber; PrinaryLangID; AltLangID; ReturnContent

- *ConversationID* - is a string identifying the set of related messages that make up a conversation between two Parties. The Party initiating a conversation determines the value of the *ConversationId* element that shall be reflected in all messages pertaining to that conversation. It remains constant for all messages within a conversation.
- *Compression* - attribute (true/false) allows control compression of response. Switching to "true" value results in returning the result ZIPed Trip_SearchRS payload, so the response looks like '<Message>ZIPed Trip_SearchRQ payload</Message>'.
- *EchoToken* - sequence number for additional message clarification assigned by the requesting host system. When a request message includes an *EchoToken* then corresponding response message MUST include an *EchoToken* with an identical value.
- *TimeStamp* – indicates the creation date and time of the message in UTC using the following format specified by ISO 8601; YYYY-MM-DDThh:mm:ss with time values using the 24 hour clock (e.g. 20 November 2003, 1:59:38 pm UTC becomes 2003-11-20T13:59:38).
- *Target* - used to indicate whether the request is for the Test or Production system.
- *Version* - for all versioned messages the version of the message is indicated by a decimal value.
- *SequenceNmbr* - used to identify the sequence number of the transaction as assigned by the sending system; allows for an application to process messages in a certain order or to request a resynchronization of messages if a system has been off-line and needs to retrieve messages that were missed.
- *PrimaryLangID* - identifies the primary language preference for the form of travel represented in a collection. The human language is identified by ISO 639 codes.
- *AltLangID* - identifies the primary language preference for the form of travel represented in a collection. The human language is identified by ISO 639 codes.

3.2. Client Context

Elements:	ClientContext
• Name allows users to provide information about the caller to the service. • This parameter is currently only available with customization and it is not a standard service. In the ClientContext section it will be possible to store additional attributes that can help when e.g. searching reservations by foreign record locators is used.	

USE CASE

Given a non-Sabre PNR locator associated with the given carrier, find Sabre record locator for this booking and display some PNR details. Please note this search option requires a dedicated activation.

```
<Trip_SearchRQ   Version="x.x.x"   xmlns="http://webservices.sabre.com/triprecord ">
<ClientContext>
   <Name>SSWEB</Name>
</ClientContext>
<ReadRequests>
  <ReservationReadRequest>
  <LocatorCriteria>
     <Locator Id="226ACB"/>
  </LocatorCriteria>
  <PosCriteria AirlineCode="EY"/>
  <ReturnOptions MaxItemsReturned="800"
                 ResponseFormat="STL"
                 ViewName="TripSearchBlob"/>
</ReservationReadRequest>
</ReadRequests>
</Trip_SearchRQ>
```

3.3. PNR Record Locator Search Criteria

Read Request Type:	ReservationReadRequest
Elements:	Locator
Locator Attributes:	Id, CreateDate, Source
The user is able to request XML response with PNRs containing provided locator numbers. • Id – PNR record locator that must be in uppercase. • CreateDate – PNR creation date, optional. • Source – optional attribute to define the locator's source e.g., Sabre hosted airline locator or booking source reference (TTY)	

USE CASE

Given the TN's PNR record locator known, retrieve TN's PNRs created on 25 Nov, 2016 in the indicated branch office B4T0 while the PNR record locator is known. If there is such PNR and it is still

an active PNR its details will be returned in the response. The same use case can be done through GetReservationRS service too.

```
<Trip_SearchRQ Version="x.x.x"
xmlns:ns2="http://webservices.sabre.com/sabreXML/2003/07"
xmlns="http://webservices.sabre.com/triprecord">
<ReadRequests>
<ReservationReadRequest>
   <LocatorCriteria>
      <Locator  Id="ABCDEF"  CreateDate="2016-11-25T00:00:00"/>
   </LocatorCriteria>
   <PosCriteria AnyBranch="false">
      <Pcc>B4T0</Pcc>
   </PosCriteria>
   <ReturnOptions ResponseFormat="STL"
                  ViewName="TripSearchBlobTN"
                  SearchType="ACTIVE"/>
</ReservationReadRequest>
</ReadRequests>
</Trip_SearchRQ>
```

USE CASE

Return baseline details of multiple booking for given carrier for which we know the PNR record locators of active PNRs. Unless any of the PNR record locators is found, such booking will not be included in the response.

```
<Trip_SearchRQ Version="x.x.x" ... >
<ReadRequests>
<ReservationReadRequest>
   <LocatorCriteria>
      <Locator  Id="ABCDEA"/>
      <Locator  Id="ABCDEB"/>
      <Locator  Id="ABCDEC"/>
      <Locator  Id="ABCDEE"/>
      <Locator  Id="ABCDEF"/>
   </LocatorCriteria>
   <PosCriteria AirlineCode="B6"/>
   <ReturnOptions  MaxItemsReturned="10"
                  ResponseFormat="STL"
                  ViewName="Full"/>
</ReservationReadRequest>
</ReadRequests>
</Trip_SearchRQ>
```

USE CASE

Check whether there is any TN's active PNR identified by given record locator and for the passenger with the indicated first name and salutation. If all the filtering rules are met together, a simple response payload will be returned thanks to indicating the TripSearchTN view. Otherwise, the service will return zero results and it will mean there are no PNRs meeting the search criteria.

```
<Trip_SearchRQ Version="x.x.x"
xmlns:ns2="http://webservices.sabre.com/sabreXML/2003/07"
xmlns="http://webservices.sabre.com/triprecord">
<ReadRequests>
<ReservationReadRequest>
   <LocatorCriteria>
```

```
      <Locator Id="ABCDEF"/>
   </LocatorCriteria>
  <NameCriteria>
    <Name Gender="M">
      <FirstName MatchMode="EXACT">MARTIN/MR</FirstName>
    </Name>
  </NameCriteria>
  <PosCriteria AnyBranch="false">
      <Pcc>B4T0</Pcc>
  </PosCriteria>
  <ReturnOptions  ResponseFormat=" STL"
                 ViewName="TripSearchTN"
                 SearchType="ACTIVE"
                 MaxItemsReturned="1"/>
</ReservationReadRequest>
</ReadRequests>
</Trip_SearchRQ>
```

USE CASE

Given PNR record locator, Search for AS active PNRs through provisioning the TTY record locator. The request indicates the response format is STL.

```
<Trip_SearchRQ Version="x.x.x"
xmlns:ns2="http://webservices.sabre.com/sabreXML/2003/07"
xmlns="http://webservices.sabre.com/triprecord">
<ReadRequests>
<ReservationReadRequest>
   <LocatorCriteria>
      <Locator Id="L2F4ZW" Source="TTY"/>
   </LocatorCriteria>
  <NameCriteria>
    <Name>
      <LastName MatchMode="SIMILAR">SMITH</LastName>
    </Name>
  </NameCriteria>
  <PosCriteria AirlineCode="HM"/>
  <ReturnOptions  ResponseFormat=" STL"
                 ViewName="Simple"
                 SearchType="ACTIVE"/>
</ReservationReadRequest>
</ReadRequests>
</Trip_SearchRQ>
```

USE CASE

Given Past Date TN's PNR record locator, retrieve the booking details. The alternative for this case is to invoke GetReservationRS service directly. Please note the PNR retrieval used with INACTIVE SearchType may not work if applied both for record location and some other filtering criteria at a time. Please review the next use case too.

```
<Trip_SearchRQ Version="x.x.x"
xmlns:ns2="http://webservices.sabre.com/sabreXML/2003/07"
xmlns="http://webservices.sabre.com/triprecord">
<ReadRequests>
<ReservationReadRequest>
  <LocatorCriteria>
      <Locator Id="NVIWUJ"/>
  </LocatorCriteria>
```

```
  <PosCriteria AnyBranch="true"/>
  <ReturnOptions ResponseFormat="STL"
                 ViewName="TripSearchBlobTN"
                 SearchType="INACTIVE"/>
</ReservationReadRequest>
</ReadRequests>
</Trip_SearchRQ>
```

USE CASE

Given Past Date TN's PNR record locator and its creation date (time of creation ignored), verify whether such PNR exists in a sample B4T0 agency. Please note that the access to Past Date PNRs retrieval functionality may require a subscription. In this case the record locator filtering criteria is applied together with the PNR creation date criteria what causes the INACTIVE SearchType attribute in the ResponseOptions is no longer needed.

```
<Trip_SearchRQ Version="x.x.x"
xmlns:ns2="http://webservices.sabre.com/sabreXML/2003/07"
xmlns="http://webservices.sabre.com/triprecord">
<ReadRequests>
<ReservationReadRequest>
  <LocatorCriteria>
      <Locator  Id="NVIWUJ"  CreateDate="2016-11-02T00:00:00"/>
  </LocatorCriteria>
  <PosCriteria AnyBranch="false">
      <Pcc>B4T0</Pcc>
  </PosCriteria>
  <ReturnOptions ResponseFormat="STL"
                 ViewName="TripSearchBlobTN"/>
</ReservationReadRequest>
</ReadRequests>
</Trip_SearchRQ>
```

3.4. Reservation Date Search Criteria

Read Request Type:	ReservationReadRequest
Elements:	ReservationStartDate, ReservationEndDate, StartDate, EndDate, UpdateDate

The user can request an XML response with the PNRs which have been changed in a given time period.

For example, if trying to search using date criteria, adding flight criteria will look for PNRs with specific flight criteria during the time range. ReservationStartDate and ReservationEndDate have a higher priority than StartDate or EndDate. When a value for ReservationStartDate is given, any values in StartDate will be ignored. The same is valid for pair EndDate/ReservationEndDate.

Elements:

- ReservationStartDate attributes include: After, Before, Is, TimeBefore, TimeAfter, TimeIs
- ReservationEndDate attributes include: After, Before, Is, TimeBefore, TimeAfter, TimeIs
- UpdateDate attributes include: After, Before, Is, TimeBefore, TimeAfter, TimeIs

USE CASE

Search for all the TN bookings associated with the indicated branch office and where the flights are within the defined date boundaries. While processing, the date attributes from for ReservationStartDate / ReservationEndDate are considered, while the time attributes are ignored.

In this case there was only a single PNR that meets the search criteria. The returned PNR contained 3 segments with dates accordingly: (1) AIR segment, 18JAN 830A 1100A, (2) AIR segment 20JAN 1150A 400P, (3) OTH segment 31AUG. The reservation date filtering rule intentionally skipped OTH segment in the processing. The focus was put on validating the date range for the flights.

If there was a very similar request to the one presented below, but with the ReservationEndDate one day earlier only, the service would return zero results.

Request:

```
<Trip_SearchRQ Version="x.x.x" ... >
<ReadRequests>
<ReservationReadRequest>
   <DateCriteria>
     <ReservationStartDate   After="2017-01-17T07:00:00"/>
     <ReservationEndDate Before="2017-01-18T11:00:00"/>
   </DateCriteria>
  <NameCriteria>
    <Name>
      <LastName   MatchMode="EXACT">SURNAME</LastName>
    </Name>
  </NameCriteria>
  <PosCriteria AnyBranch="false">
      <Pcc>1ABC</Pcc>
  </PosCriteria>
  <ReturnOptions ResponseFormat="STL"
                 ViewName="TripSearchTN"
                 SearchType="ACTIVE"
                 MaxItemsReturned="10">
  </ReturnOptions>
</ReservationReadRequest>
</ReadRequests>
</Trip_SearchRQ>
```

Response:

```
<Trip_SearchRS ... >
<Success>Success</Success>
<ReservationsList NumberResults="1" NumberPages="1" TotalResults="1">
       <Reservations>
              <Reservation Locator="ABCDER">
                     <stl19:GetReservationRS   Version="1.19.0"/>
              </Reservation>
       </Reservations>
</ReservationsList>
</Trip_SearchRS>
```

USE CASE

Given flight details such as flight number and departure airport, find all the active LA's PNRs for SMITH as last name, which were recently updated on Dec 26 or Dec 27. Present the response in STL format.

```
<Trip_SearchRQ Version="x.x.x" ... >
<ReadRequests>
<ReservationReadRequest>
        <DateCriteria>
     <UpdateDate After="2016-12-26T00:00:00" Before="2016-12-27T00:00:00"/>
   </DateCriteria>
     <NameCriteria>
        <Name>
        <FirstName   MatchMode="ANYWHERE">JOHN</FirstName>
        <LastName   MatchMode="EXACT">SMITH</LastName>
        </Name>
     </NameCriteria>
  <FlightCriteria>
    <Flight>
      <FlightNumber>2464</FlightNumber>
      <DepartureAirport>LIM</DepartureAirport>
    </Flight>
  </FlightCriteria>
     <PosCriteria  AirlineCode="LA"/>
     <ReturnOptions ViewName="Default"
     MaxItemsReturned="800"  ResponseFormat=" STL"/>
</ReservationReadRequest>
</ReadRequests>
</Trip_SearchRQ>
```

3.5. Reservation Search Criteria

Read Request Type:	ReservationReadRequest
Elements:	TtyAirline, Source, TtyGds
The user can request an XML response with the PNRs containing provided Source information. This search is not a standard service.	

3.6. Segment Search Criteria

Read Request Type:	ReservationReadRequest
Elements:	Air, Car, Hotel, Rail, Cruise, Insurance, OTH, Other (other segments available), Segment
The user can request an XML response with the PNRs containing provided segment types and other segment related details. Elements:	

- Air, Car, Hotel, Rail, Cruise, Insurance, OTH and Other include attributes: Exists, MoreThan and Is.
  - Segment – consists of following elements:
    - StartCityCode, StartDateTime (with attributes After, Before, Is, TimeBefore, TimeAfter, TimeIs),
    - EndCityCode, EndDateTime (with attributes After, Before, Is, TimeBefore, TimeAfter, TimeIs),
    - Source – allow values CAR, RAIL and HOTEL only.
    - Type – allow values CAR, RAIL and HOTEL only.
    - VendorCode.
  - Dates can be specified as search criteria only for RAIL, HOTEL, and CAR segments. This is supported by searching SegmentCriteria/Segment. Please note that to retrieve PNRs containing AIR segments within specified dates, please specify FlightCriteria element.
  - Segment number is used to return the PNRs having this specified number within the segment types. It can be used in searches of Air, Cruise, Insurance, OTH, etc. This is supported by searching SegmentCriteria/Air, SegmentCriteria/Car, etc.

USE CASE

Given flight details such as departure airport, find all LA's PNRs, which contain both Air and Hotel segments. Present the response is STL format. Search against active and past date PNRs.

```
<Trip_SearchRQ Version="x.x.x" ... >
<ReadRequests>
<ReservationReadRequest>
   <SegmentCriteria>
      <Air Exists="true"/>
      <Hotel Exists="true"/>
   </SegmentCriteria>
      <FlightCriteria>
         <Flight>
            <DepartureAirport>JFK</DepartureAirport>
         </Flight>
      </FlightCriteria>
   <PosCriteria AirlineCode="LA"/>
   <ReturnOptions  MaxItemsReturned="3000"
                  ResponseFormat="STL"
                  ViewName="TripSearchBlobX"
                  SearchType="BOTH"/>
</ReservationReadRequest>
</ReadRequests>
</Trip_SearchRQ>
```

USE CASE

Given flight details such as departure airport, find all the active TN PNRs, which contain both Air and Hotel segment and Vendor Code is MC (Marriott Hotels). Present the response is STL format.

```
<Trip_SearchRQ Version="x.x.x" ... >
<ReadRequests>
<ReservationReadRequest>
<SegmentCriteria>
    <Air Exists="true"/>
    <Hotel Exists="true"/>
    <Segment><VendorCode>MC</VendorCode></Segment>
</SegmentCriteria>
<FlightCriteria>
    <Flight>
       <DepartureAirport>JFK</DepartureAirport>
    </Flight>
</FlightCriteria>
<PosCriteria AnyBranch="true"/>
<ReturnOptions   MaxItemsReturned="3000"
               ResponseFormat="STL"
               ViewName="TripSearchTN"
               SearchType="BOTH"/>
</ReservationReadRequest>
</ReadRequests>
</Trip_SearchRQ>
```

3.7. Ticket Search Criteria

Read Request Type:	ReservationReadRequest
Elements:	HasBeenTicketed (at least one segment in the PNR), OnHold, Ticket,

The user can request an XML response with the PNRs containing ticketing information.

- *Ticket* contains element of *TicketNumber* with the attribute of *MatchMode.*
- *Ticket OnHold* criteria uses Ticketing Time Limit field in the background. It searches for all PNRs that have “TL” element in the *P8 field.

USE CASE

Given the 13-digit ticket number, find all the Past Date PNRs of the indicated TN agency. Please note the search for TN PNRs by ticket number assumes that ticket numbers consist of 13 digits and it is stored in the standard ticket number PNR field.

```
<Trip_SearchRQ Version="x.x.x" ... >
<ReadRequests>
<ReservationReadRequest>
   <TicketCriteria>
     <Ticket>
       <TicketNumber    MatchMode="EXACT">0017867018272</TicketNumber>
     </Ticket>
   </TicketCriteria>
```

```
   <PosCriteria AnyBranch="false">
      <Pcc>B4T0</Pcc>
   </PosCriteria>
   <ReturnOptions  ResponseFormat="STL"
                 ViewName="TripSearchBlobTN"
                 SearchType="INACTIVE"/>
</ReservationReadRequest>
</ReadRequests>
</Trip_SearchRQ>
```

USE CASE

Given a couple of leading characters of the ticket number, find all the active bookings for the indicated carrier.

```
<Trip_SearchRQ Version="x.x.x" ... >
<ReadRequests>
<ReservationReadRequest>
   <TicketCriteria>
     <Ticket>
       <TicketNumber   MatchMode="START"> 001211007</TicketNumber>
     </Ticket>
   </TicketCriteria>
   <PosCriteria AirlineCode="AA"/>
   <ReturnOptions   ResponseFormat="STL"
                 ViewName="Full"
                 SearchType="ACTIVE"/>
</ReservationReadRequest>
</ReadRequests>
</Trip_SearchRQ>
```

USE CASE

Search for active TN PNRs with Ticketing Time Limit field set to TL and last name *Test*. Perform search across all branch locations and present response in the STL format.

```
<Trip_SearchRQ Version="x.x.x" ... >
<ReadRequests>
<ReservationReadRequest>
   <TicketCriteria>
       <OnHold>true</OnHold>
   </TicketCriteria>
   <NameCriteria>
       <Name>
           <LastName>TEST</LastName>
       </Name>
   </NameCriteria>
   <PosCriteria AnyBranch="true"/>
   <ReturnOptions   ResponseFormat="STL"
                 ViewName="TripSearchTN"
                 SearchType="ACTIVE"/>
</ReservationReadRequest>
</ReadRequests>
</Trip_SearchRQ>
```

3.8. EMD Search Criteria

Read Request Type:	ReservationReadRequest
Elements:	EMD
Attributes:	EMDNumber, EMDCouponNumber
The user can request an XML response with the PNRs containing EMD information. • *EMD* contains element of *EMDNumber* and *EMDCouponNumber* with the attribute of *MatchMode*.	

USE CASE

Search for active airline PNRs to find all PNRs that include EMD which starts with specified numbers. Present the response in the STL file format with baseline PNR details. The response will contain both the number of PNRs as well as all the PNR record locators that meet the search criteria.

```
<Trip_SearchRQ Version="x.x.x" ... >
<ReadRequests>
<ReservationReadRequest>
  <EMDCriteria>
    <EMD>
       <EMDNumber   MatchMode="START">79515049434</EMDNumber>
    </EMD>
  </EMDCriteria>
  <PosCriteria AirlineCode="VA"/>
  <ReturnOptions ResponseFormat="STL"
                 ViewName="TripSearch"
                 SearchType="ACTIVE"/>
</ReservationReadRequest>
</ReadRequests>
</Trip_SearchRQ>
```

3.9. Passegner Name Search Criteria

Read Request Type:	ReservationReadRequest
Elements:	Name
Attributes:	Gender, Type
The user can request an XML response with the PNRs containing provided First Names and/or Last Names. • Gender - acceptable values are: M (Male), F (Female). Names with no gender provided will be included both in case of specifying M or F value. • The gender is decoded from name title. Titles which are listed in the “Not Defined” column below will be included in both - Male and Female search requests. Following are titles which define the gender element:	

Male	Female	Not Defined
BROTHER	LADY	ADM
FATHER	MADAM	CAPT
MAST	MADAME	CH
MASTER	MISS	CHD
MR	MISTRESS	COL
MSTR	MLLE	CPL
PERE	MM	CPT
SIR	MME	CPTN
	MOTHER	DR
	MRS	GEN
	MS	HON
	MSS	INF
	SIS	JDG
	SIST	JR
	SISTER	JUDGE
	SOEUR	JUGE
		LT
		MAJ
		PFC
		PROF
		RABBI
		RABBIN
		REV
		SEN
		SGT
		SR

- Type - acceptable values are: A (Adult), C (Corp), B(BSG Group), I (Infant)
- Name element consists of FirstNme (the given name of the traveler), LastName (the family name or last name of the traveler), both FirstName and LastName attributes allow the following match modes: EXACT, START, END, ANYWHERE, SIMILAR, EXACT_NO_COMPRESS.

USE CASE

Search for active AA's PNRs related to the specified flight and passenger with KOWALSKI last name and first name that contains ROG set of characters. The response in STL file format to contain only baseline data describing PNRs because of using TripSearch view, however with passenger names included too, thanks to specifying the NAME subject area in the request body.

```
<Trip_SearchRQ Version="x.x.x" ... >
<ReadRequests>
<ReservationReadRequest>
  <NameCriteria>
    <Name>
      <FirstName MatchMode="ANYWHERE">ROG</FirstName>
      <LastName   MatchMode="EXACT">KOWALSKI</LastName
```

```
    </Name>
  </NameCriteria>
  <FlightCriteria>
    <Flight>
      <FlightNumber>0288</FlightNumber>
      <DepartureAirport>FRA</DepartureAirport>
      <DepartureDateTime Is="2016-12-22T12:50:00"/>
      <AirlineCode>CX</AirlineCode>
    </Flight>
  </FlightCriteria>
  <PosCriteria AirlineCode="AA"/>
  <ReturnOptions
         ResponseFormat="STL"
         ViewName="TripSearch"
         SearchType="ACTIVE"
         MaxItemsReturned="100">
    <SubjectAreas>
      <SubjectArea>NAME</SubjectArea>
    </SubjectAreas>
  </ReturnOptions>
</ReservationReadRequest>
</ReadRequests>
</Trip_SearchRQ>
```

USE CASE

Search for active airline PNRs to find several infants travelling on the indicated flight. Present the response in the STL file format with baseline PNR details. The response will contain both the number of PNRs as well as all the PNR record locators that meet the search criteria.

```
<Trip_SearchRQ Version="x.x.x" ... >
<ReadRequests>
<ReservationReadRequest>
  <NameCriteria>
    <Name Type="I"/>
  </NameCriteria>
  <FlightCriteria>
    <Flight>
      <FlightNumber>1234</FlightNumber>
      <DepartureAirport>FRA</DepartureAirport>
      <DepartureDateTime Is="2017-12-22T12:50:00"/>
      <AirlineCode>ET</AirlineCode>
    </Flight>
  </FlightCriteria>
  <PosCriteria AirlineCode="ET"/>
  <ReturnOptions ResponseFormat="STL"
                 ViewName="TripSearch"
                 SearchType="ACTIVE"/>
</ReservationReadRequest>
</ReadRequests>
</Trip_SearchRQ>
```

USE CASE

Search for active airline PNRs with Females having last name like KOWALSKI.

Sample request:

```
<Trip_SearchRQ Version="x.x.x" ... >
<ReadRequests>
<ReservationReadRequest>
   <LocatorCriteria>
      <Locator Id="GLJTMQ"/>
   </LocatorCriteria>
  <NameCriteria>
    <Name>
      <LastName MatchMode="SIMILAR">KOWALSKI</LastName>
    </Name>
  </NameCriteria>
  <PosCriteria AirlineCode="AA"/>
  <ReturnOptions ResponseFormat="STL"
                 ViewName="Simple"
                 SearchType="ACTIVE"
                 MaxItemsReturned="10">
   <SubjectAreas>
      <SubjectArea>NAME</SubjectArea>
    </SubjectAreas>
   </ReturnOptions>
</ReservationReadRequest>
</ReadRequests>
</Trip_SearchRQ>
```

Trip_SearchRQ will list all PNRs that match specified search criteria and apply Gender Type filtering. The list will contain all PNRs with Gender Type defined as Female and Not Defined ones.

Sample response:

```
<Trip_SearchRS Version="x.x.x" ... >
<Success>Success</Success>
<ReservationsList  NumberResults="4"  NumberPages="1"  TotalResults="4">
<Reservations>
   <Reservation Locator="GLJTMQ">
      <stl19:GetReservationRS  Version="1.19.0">
         <stl19:Reservation numberInParty="3" numberOfInfants="0"
NumberInSegment="3">
            <stl19:BookingDetails>
               <stl19:RecordLocator>GLJTMQ</stl19:RecordLocator>
               <stl19:CreationTimestamp>2017-03-
24T06:35:00</stl19:CreationTimestamp>
               <stl19:SystemCreationTimestamp>2017-03-
24T06:35:00</stl19:SystemCreationTimestamp>
               <stl19:CreationAgentID>HQX</stl19:CreationAgentID>
               <stl19:UpdateTimestamp>2017-03-24T06:35:04</stl19:UpdateTimestamp>
               <stl19:PNRSequence>1</stl19:PNRSequence>
               <stl19:DivideSplitDetails/>
               <stl19:EstimatedPurgeTimestamp>2017-05-
23T00:00:00</stl19:EstimatedPurgeTimestamp>

<stl19:UpdateToken>f9d5c13970984f25fb06e2236448ed7eb6925804cd3964f</   stl19:UpdateToke
n>
            </stl19:BookingDetails>
            <stl19:POS>
```

```
               <stl19:Source BookingSource="A0A0" AgentSine="HQX"
PseudoCityCode="HDQ" ISOCountry="US" AgentDutyCode="8" AirlineVendorID="AA"
HomePseudoCityCode="HDQ"/>
            </stl19:POS>
            <stl19:PassengerReservation>
               <stl19:Passengers>
                  <stl19:Passenger id="3" nameType="S" nameId="01.01"
nameAssocId="1" elementId="pnr-3.1">
                     <stl19:LastName>KOWALSKI</stl19:LastName>
                     <stl19:FirstName>JAN   MR</stl19:FirstName>
                     <stl19:Seats/>
                  </stl19:Passenger>
                  <stl19:Passenger id="4" nameType="S" nameId="02.01"
nameAssocId="2" elementId="pnr-4.2">
                     <stl19:LastName>KOWALSKI</stl19:LastName>
                     <stl19:FirstName>ELISABETH MS</stl19:FirstName>
                     <stl19:Seats/>
                  </stl19:Passenger>
                  <stl19:Passenger id="5" nameType="S" nameId="03.01"
nameAssocId="3" elementId="pnr-5.3">
                     <stl19:LastName>KOWALSKA</stl19:LastName>
                     <stl19:FirstName>ANNA   MRS</stl19:FirstName>
                     <stl19:Seats/>
                  </stl19:Passenger>
               </stl19:Passengers>
               <stl19:Segments/>
               <stl19:TicketingInfo/>
               <stl19:ItineraryPricing/>
            </stl19:PassengerReservation>
            <stl19:ReceivedFrom/>
            <stl19:EmailAddresses/>
         </stl19:Reservation>
      </stl19:GetReservationRS>
   </Reservation>
   <Reservation Locator="GLPNAA">
      <stl19:GetReservationRS  Version=" 1.19.0">
         <stl19:Reservation numberInParty="1" numberOfInfants="0"
NumberInSegment="1">
            <stl19:BookingDetails>
               <stl19:RecordLocator>GLPNAA</stl19:RecordLocator>
               <stl19:CreationTimestamp>2017-03-
21T00:17:00</stl19:CreationTimestamp>
               <stl19:SystemCreationTimestamp>2017-03-
21T00:17:00</stl19:SystemCreationTimestamp>
               <stl19:CreationAgentID>AXZ</stl19:CreationAgentID>
               <stl19:UpdateTimestamp>2017-03-21T00:18:03</stl19:UpdateTimestamp>
               <stl19:PNRSequence>2</stl19:PNRSequence>
               <stl19:DivideSplitDetails/>
               <stl19:EstimatedPurgeTimestamp>2017-04-
11T00:00:00</stl19:EstimatedPurgeTimestamp>

<stl19:UpdateToken>6ab0d6cf92f33a2aab5a085a8016adcb1a1fa5f81f103178</  stl19:UpdateTok
en>
            </stl19:BookingDetails>
            <stl19:POS>
               <stl19:Source BookingSource="A2FE" AgentSine="AXZ"
PseudoCityCode="A2FE" ISOCountry="US" AgentDutyCode="*" AirlineVendorID="AA"
HomePseudoCityCode="A2FE"/>
            </stl19:POS>
            <stl19:PassengerReservation>
               <stl19:Passengers>
                  <stl19:Passenger id="4" nameType="S" nameId="01.01"
nameAssocId="1" elementId="pnr-4.1">
```

```
                     <stl19:LastName>KOWALSKA</stl19:LastName>
                     <stl19:FirstName>JANINA</stl19:FirstName>
                     <stl19:Seats/>
                  </stl19:Passenger>
               </stl19:Passengers>
               <stl19:Segments/>
               <stl19:TicketingInfo/>
               <stl19:ItineraryPricing/>
            </stl19:PassengerReservation>
            <stl19:ReceivedFrom/>
            <stl19:EmailAddresses/>
         </stl19:Reservation>
      </stl19:GetReservationRS>
   </Reservation>
   <Reservation Locator="GEQQAB">
      <stl19:GetReservationRS  Version=" 1.19.0">
         <stl19:Reservation numberInParty="2" numberOfInfants="1"
NumberInSegment="1">
            <stl19:BookingDetails>
               <stl19:RecordLocator>GEQQAB</stl19:RecordLocator>
               <stl19:CreationTimestamp>2017-03-
22T05:54:00</stl19:CreationTimestamp>
               <stl19:SystemCreationTimestamp>2017-03-
22T05:54:00</stl19:SystemCreationTimestamp>
               <stl19:UpdateTimestamp>2017-03-22T05:55:33</stl19:UpdateTimestamp>
               <stl19:PNRSequence>5</stl19:PNRSequence>
               <stl19:DivideSplitDetails/>
               <stl19:EstimatedPurgeTimestamp>2017-03-
23T00:00:00</stl19:EstimatedPurgeTimestamp>

<stl19:UpdateToken>708383d4527d5fb007fc65aac31af8d8ba63c66fc4e630a0</  stl19:UpdateTok
en>
            </stl19:BookingDetails>
            <stl19:POS>
               <stl19:Source BookingSource="A0A0" PseudoCityCode="PLT"
AirlineVendorID="AA" HomePseudoCityCode=" PLT"/>
            </stl19:POS>
            <stl19:PassengerReservation>
               <stl19:Passengers>
                  <stl19:Passenger id="5" nameType="S" nameId="01.01"
nameAssocId="1" elementId="pnr-5.1">
                     <stl19:LastName>KOWALSKI</stl19:LastName>
                     <stl19:FirstName>JAN   MR</stl19:FirstName>
                     <stl19:Seats/>
                  </stl19:Passenger>
                  <stl19:Passenger id="6" nameType="I" nameId="02.01"
nameAssocId="2" elementId="pnr-6.2">
                     <stl19:LastName>KOWALSKI</stl19:LastName>
                     <stl19:FirstName>TOMUS</stl19:FirstName>
                     <stl19:Seats/>
                  </stl19:Passenger>
               </stl19:Passengers>
               <stl19:Segments/>
               <stl19:TicketingInfo/>
               <stl19:ItineraryPricing/>
            </stl19:PassengerReservation>
            <stl19:ReceivedFrom/>
            <stl19:EmailAddresses/>
         </stl19:Reservation>
      </stl19:GetReservationRS>
   </Reservation>
   <Reservation Locator="FGUDMB">
      <stl19:GetReservationRS  Version=" 1.19.0">
```

```
         <stl19:Reservation numberInParty="1" numberOfInfants="0"
NumberInSegment="1">
            <stl19:BookingDetails>
               <stl19:RecordLocator>FGUDMB</stl19:RecordLocator>
               <stl19:CreationTimestamp>2017-03-
14T06:07:00</stl19:CreationTimestamp>
               <stl19:SystemCreationTimestamp>2017-03-
14T06:07:00</stl19:SystemCreationTimestamp>
               <stl19:CreationAgentID>ATW</stl19:CreationAgentID>
               <stl19:UpdateTimestamp>2017-03-16T06:05:12</stl19:UpdateTimestamp>
               <stl19:PNRSequence>3</stl19:PNRSequence>
               <stl19:DivideSplitDetails/>
               <stl19:EstimatedPurgeTimestamp>2017-05-
15T00:00:00</stl19:EstimatedPurgeTimestamp>
               <stl19:UpdateToken>-
5ea73d5431cc2869e4413ec8472c3a263a74d39ce56de8c1</stl19:UpdateToken>
            </stl19:BookingDetails>
            <stl19:POS>
               <stl19:Source BookingSource="WD40" AgentSine="ATW"
PseudoCityCode="WD40" ISOCountry="US" AgentDutyCode="*" AirlineVendorID="AA"
HomePseudoCityCode="WD40"/>
            </stl19:POS>
           <stl19:PassengerReservation>
               <stl19:Passengers>
                  <stl19:Passenger id="4" nameType="S" referenceNumber="TEST"
nameId="01.01" nameAssocId="1" elementId="pnr-4.1">
                     <stl19:LastName>KOWALSKI</stl19:LastName>
                     <stl19:FirstName>JAN</stl19:FirstName>
                     <stl19:Seats/>
                  </stl19:Passenger>
               </stl19:Passengers>
               <stl19:Segments/>
               <stl19:TicketingInfo/>
               <stl19:ItineraryPricing/>
            </stl19:PassengerReservation>
            <stl19:ReceivedFrom/>
            <stl19:EmailAddresses/>
         </stl19:Reservation>
      </stl19:GetReservationRS>
   </Reservation>
</Reservations>
</ReservationsList>
</Trip_SearchRS>
```


3.10. Email Search Criteria

Read Request Type:	ReservationReadRequest
Elements:	EmailAddress
Attributes:	MatchMode
The user can request an XML response with the PNRs containing provided e-mail address. • MatchMode options supported for these criteria: EXACT, START, END	

USE CASE

Given a couple of first characters of the email address stored in the standard PNR email address field, find all the active bookings of an indicated TN agency that meet the search criteria.

```
<Trip_SearchRQ Version="x.x.x"
xmlns:ns2="http://webservices.sabre.com/sabreXML/2003/07"
xmlns="http://webservices.sabre.com/triprecord">
<ReadRequests>
<ReservationReadRequest>
   <EmailCriteria>
     <EmailAddress   MatchMode="START">MARTINNNN</EmailAddress>
   </EmailCriteria>
   <PosCriteria AnyBranch="false">
      <Pcc>B4T0</Pcc>
   </PosCriteria>
   <ReturnOptions   ResponseFormat="STL"
                  ViewName="TripSearchBlobTN"
                  SearchType="ACTIVE"/>
</ReservationReadRequest>
</ReadRequests>
</Trip_SearchRQ>
```

3.11. Service Search Criteria

Read Request Type:	ReservationReadRequest
Elements:	Service
Attributes:	OperationType
The user can request an XML response with the PNRs containing different types of SSRs. • OperationType attribute value OR (default) • Service elements can be either Foid or Generic • Foid required attributes are Type and Number • Generic consists of two attributes: Service Type (required) and Service Text (optional).	

3.12. Document Search Criteria

Read Request Type:	ReservationReadRequest
Elements:	Document
Attributes:	OperationType
The user can request an XML response with the PNRs containing different types of document numbers in the SSRs. • OperationType attribute value is OR (default)	

- Document elements can be either ExtractedDocumentNumber or RawDocumentNumber
- Document includes the attribute DocumentType which values include PASSPORT, NATIONAL_ID, LOCAL_ID, DRIVER_LICENSE and NEXUS
- ExtractedDocumentNumber contains the elements DocumentCode and DocumentId
- DocumentId and RawDocumentNumber elements include MatchMode attribute (EXACT, START, END, ANYWHERE, SIMILAR)

USE CASE

```
<Trip_SearchRQ   Version="x.x.x"   xmlns="http://webservices.sabre.com/triprecord">
<ReadRequests>
<ReservationReadRequest>
    <DocumentCriteria>
      <Document DocumentType="NATIONAL_ID">
        <ExtractedDocumentNumber>
          <DocumentId>DE456789</DocumentId>
        </ExtractedDocumentNumber>
      </Document>
    </DocumentCriteria>
  <PosCriteria AirlineCode="AB"/>
  <ReturnOptions MaxItemsReturned="1000"
                 ResponseFormat="STL"
                 ViewName="TripSearchBlobX"/>
  </ReservationReadRequest>
</ReadRequests>
</Trip_SearchRQ>
```

3.13. OSI Search Criteria

Read Request Type:	ReservationReadRequest
Elements:	Osi
Osi Elements:	Text

The user is able to request an XML response with the PNRs containing provided text describing Other Supplementary Information. Trip will compress (removes white spaces and non-alphanumeric) OsiCriteria/Text and use that to search against the values created from OSI Free Text by compressing it and reducing the length to the first 40 chars.

- Text element includes MatchMode attribute (START)
- Text non-alphanumeric values are removed for the search and when storing data.

This search option is available only to AS customers.

USE CASE

Given some bookings for the given carrier, find all the ones that contain OSI entry starting with the specified set of characters. The request sample presented below explains also how to use Subject Areas with the Simple request view.

```
<Trip_SearchRQ Version="x.x.x"
xmlns:ns2="http://webservices.sabre.com/sabreXML/2003/07"
xmlns="http://webservices.sabre.com/triprecord">
<ReadRequests>
<ReservationReadRequest>
   <OsiCriteria>
     <Osi><Text MatchMode="START">HHL MC CANCELLATION NUMBER 1234A</Text></Osi>
   </OsiCriteria>
  <PosCriteria AirlineCode="EY"/>
  <ReturnOptions ResponseFormat="STL"
                 ViewName="Simple"
                 SearchType="ACTIVE">
  <SubjectAreas>
      <SubjectArea>NAME</SubjectArea>
      <SubjectArea>PHONE</SubjectArea>
      <SubjectArea>AFAX</SubjectArea>
      <SubjectArea>GFAX</SubjectArea>
    </SubjectAreas>
  </ReturnOptions>
</ReservationReadRequest>
</ReadRequests>
</Trip_SearchRQ>
```

3.14. Profile Search Criteria

Read Request Type:	ReservationReadRequest
Elements:	Profile
Profile Attributes:	ProfileID, ProfileType
Attributes:	OperationType
The user can request an XML response with the PNRs containing provided Profile attributes. • ProfileID • ProfileType acceptable values e.g., AGT (TAgent), AGY (TAgency), CRP (CorporateID), TVL (Traveler), GRP (Group), TVLNN (TvlNoName). • OperationType attribute value OR (default)	

USE CASE

Given TN's Past Date PNRs associated with the indicated profile, search for all the ones associated with the indicted branch office code.

```
<Trip_SearchRQ Version="x.x.x"
xmlns:ns2="http://webservices.sabre.com/sabreXML/2003/07"
xmlns="http://webservices.sabre.com/triprecord">
<ReadRequests>
<ReservationReadRequest>
  <ProfileCriteria>
     <Profile  ProfileID="1234567890"  ProfileType="AGY"/>
  </ProfileCriteria>
  <PosCriteria AnyBranch="false">
     <Pcc>B4T0</Pcc>
  </PosCriteria>
  <ReturnOptions ResponseFormat="STL"
                 ViewName="TripSearchBlobTN"
                 SearchType="INACTIVE"
                 MaxItemsReturned="1000"/>
</ReservationReadRequest>
</ReadRequests>
</Trip_SearchRQ>
```

3.15. Phone Search Criteria

Read Request Type:	ReservationReadRequest
Elements:	PhoneNumber
The user can request an XML response with the PNRs containing provided Phone number (only numbers are used by search engine, other characters are omitted). • PhoneNumber element includes MatchMode attribute (EXACT, START, END, ANYWHERE)	

USE CASE

Given exact passenger last name and a string of characters present anywhere in the standard phone number PNR field, retrieve all the active bookings of the indicated AS carrier that meet the search criteria applied.

```
<Trip_SearchRQ Version="x.x.x"
xmlns:ns2="http://webservices.sabre.com/sabreXML/2003/07"
xmlns="http://webservices.sabre.com/triprecord">
<ReadRequests>
<ReservationReadRequest>
  <NameCriteria>
    <Name>
      <LastName MatchMode="EXACT">SANCHEZ</LastName>
    </Name>
  </NameCriteria>
  <TelephoneCriteria>
    <PhoneNumber MatchMode="ANYWHERE">44123456125</PhoneNumber>
  </TelephoneCriteria>
  <PosCriteria AirlineCode="AA"/>
  <ReturnOptions ResponseFormat="STL"
                 ViewName="Full"
                 SearchType="ACTIVE"/>
</ReservationReadRequest>
</ReadRequests>
</Trip_SearchRQ>
```

USE CASE

Given only a couple of first letter of the phone number stored with the booking, find all PNRs managed by given airline and associated with the defined flight. Present the response in STL response format.

```
<Trip_SearchRQ Version="x.x.x" ... >
<ReadRequests>
<ReservationReadRequest>
<TelephoneCriteria>
   <PhoneNumber MatchMode="START">23323232</PhoneNumber>
</TelephoneCriteria>
<PosCriteria AirlineCode="B6"/>
<ReturnOptions  MaxItemsReturned="200"
               ResponseFormat="STL"
               ViewName="TripSearchBasic"/>
</ReservationReadRequest>
</ReadRequests>
</Trip_SearchRQ>
```

3.16. Frequent Flyer Search Criteria

Read Request Type:	ReservationReadRequest
Elements:	Loyalty
Loyalty Attributes:	ProgramID, MembershipID , TierLevel

The user can request an XML response with the PNRs containing provided loyalty program attributes.

- ProgramID indicates the company owner of the loyalty program.
- MembershipID is a unique identifier of the member in the program (Membership number, account number, etc).
- TierLevel indicates the member status in the program, e.g. GOLD, PLATINUM etc.

USE CASE

Given both the passenger first name, gender and Frequent Flyer number, search for any inactive TN's bookings. The response to contain phone due to adding the related subject area in the request. The name criteria is actually not a must while searching by the loyalty criteria but still can be present. Please note the access to Past Date PNRs requires a dedicated activation for each TN agency.

```
<Trip_SearchRQ Version="x.x.x"
xmlns:ns2="http://webservices.sabre.com/sabreXML/2003/07"
xmlns="http://webservices.sabre.com/triprecord">
<ReadRequests>
<ReservationReadRequest>
  <NameCriteria>
    <Name Gender="M">
      <FirstName MatchMode="START">JOHN/MR</FirstName>
    </Name>
  </NameCriteria>
  <LoyaltyCriteria>
```

```
    <Loyalty ProgramID="AA" MembershipID="1234567" TierLevel="97"/>
  </LoyaltyCriteria>
  <PosCriteria AnyBranch="true"/>
  <ReturnOptions ResponseFormat="STL"
                 ViewName="TripSearchTN"
                 SearchType="INACTIVE">
    <SubjectAreas>
      <SubjectArea>NAME</SubjectArea>
      <SubjectArea>PHONE</SubjectArea>
    </SubjectAreas>
  </ReturnOptions>
</ReservationReadRequest>
</ReadRequests>
</Trip_SearchRQ>
```

USE CASE

Given Frequent Flyer number, find all associated active TN's PNRs in either B4T0 or 22L0 agency, retrieving especially the record locators, PNR creation dates and the associated PCCs. The response to be presented in STL response format with a limitation to 250 results.

```
<Trip_SearchRQ Version="x.x.x"
xmlns:ns2="http://webservices.sabre.com/sabreXML/2003/07"
xmlns="http://webservices.sabre.com/triprecord">
<ReadRequests>
<ReservationReadRequest>
  <LoyaltyCriteria>
    <Loyalty ProgramID="AA" MembershipID="33D5Y30" />
  </LoyaltyCriteria>
  <PosCriteria AnyBranch="false">
    <Pcc>B4T0</Pcc>
    <Pcc>22L0</Pcc>
  </PosCriteria>
  <ReturnOptions ResponseFormat="STL"
                 ViewName="TripSearchTN"
                 SearchType="ACTIVE"
                 MaxItemsReturned="250"/>
</ReservationReadRequest>
</ReadRequests>
</Trip_SearchRQ>
```

3.17. Flight Details Search Criteria

Read Request Type:	ReservationReadRequest
Elements:	Flight
Flight Elements:	FlightNumber, MarketingFlightNumber, OperatingFlightNumber, DepartureAirport, DepartureCity, DepartureCountry, ArrivalAirport, ArrivalCity, ArrivalCountry, DepartureDateTime, ArrivalDateTime, AirlineCode, MarketingArlineCode, OperatingArlineCode, ClassOfService, CabinCode, StatusCode, NoOfPassemgers, FilterFlownFlights

The user can request an XML response with the PNRs containing provided flight attributes.

- FlightNumber, DepartureDateTime, AirlineCode are obligatory elements for these criteria.
- DepartureDateTime with attributes After, Before, is, TimeBefore, TimeAfter, Timels
- ArrivalDateTime with attributes After, Before, is, TimeBefore, TimeAfter, Timels
- FilterFlownFlights is the filtering out of flown segments. This filtering is currently only available with customization and this is not a standard service.

USE CASE

Find all active PNRs for the indicted carrier and associated with the specified flight number, airline code, departure airport and within the defined range for departure and arrival data and time.

```
<Trip_SearchRQ Version="x.x.x"
xmlns:ns2="http://webservices.sabre.com/sabreXML/2003/07"
xmlns="http://webservices.sabre.com/triprecord">
<ReadRequests>
<ReservationReadRequest>
  <FlightCriteria>
    <Flight>
      <FlightNumber>0001</FlightNumber>
      <DepartureAirport>JFK</DepartureAirport>
      <DepartureDateTime   After="2016-12-20T07:00:00"/>
      <ArrivalDateTime   Before="2016 -12-21T10:11:00"/>
      <AirlineCode>ET</AirlineCode>
    </Flight>
  </FlightCriteria>
  <PosCriteria AirlineCode="ET"/>
  <ReturnOptions ResponseFormat="STL"
                 ViewName="Simple"
                 SearchType="ACTIVE"/>
</ReservationReadRequest>
</ReadRequests>
</Trip_SearchRQ>
```

USE CASE

Find all PNRs associated with the indicated departure time from the indicated departure airport. Return a simple list of PNRs.

```
<Trip_SearchRQ Version="x.x.x" ... >
<ReadRequests>
<ReservationReadRequest>
<FlightCriteria>
   <Flight>
      <DepartureAirport>JFK</DepartureAirport>
      <DepartureDateTime Is="2015-03-31T07:03:00"/>
   </Flight>
</FlightCriteria>
<PosCriteria AirlineCode="B6"/>
<ReturnOptions   MaxItemsReturned="200"
               ResponseFormat="STL"
               ViewName="TripSearchBlobX"/>
</ReservationReadRequest>
```

```
</ReadRequests>
</Trip_SearchRQ>
```

3.18. POS Search Criteria

Read Request Type:	*ReservationReadRequest*
Elements:	*Pcc*
Pcc Attributes:	*AnyBranch, AirlineCode, CreateCityCode, IataNumber, PrimeHost*

The user can request an XMLresponse with the PNRs available for provided PCC codes.
- POS Criteria (required)
- If AS search – partition (*AirlineCode*) is used as search criteria;
- If TN search - PCCs (*Pcc*) and branch access indicator (*AnyBranch*) are used as search criteria.

- If *P*cc is provided and (*AnyBranch = false*), search would be triggered only among PNRs created by agency PCC;
- Otherwise (*AnyBranch = true*) search would be triggered among all PNRs created by agency(PCC gets fromsession used to call Trip_SearchRQ service) and all its branches

- Access to PCC's and partitions will be limited by security access.

Read Request Type:	*ReservationReadRequest*
Elements:	*Pcc*
Pcc Attributes:	*AnyBranch, AirlineCode, CreateCityCode, IataNumber, PrimeHost*

The user can request an XMLresponse with the PNRs available for provided PCC codes.
- POS Criteria (required)
  - If AS search – partition (*AirlineCode*) is used as search criteria;
  - If TN search - PCCs (*Pcc*) and branch access indicator (*AnyBranch*) are used as search criteria. In a common case a TN search is invoked against the AA partition.
- If *P*cc is provided and (*AnyBranch = false*), search would be triggered only among PNRs created by agency PCC;
- Otherwise (*AnyBranch = true*) search would be triggered among all PNRs created by agency(PCC gets fromsession used to call Trip_SearchRQ service) and all its branches
- Access to PCC's and partitions will be limited by security access.

USE CASE

Search PNRs within the indicated branches.

```
<Trip_SearchRQ Version="x.x.x" ... >
<ReadRequests><ReservationReadRequest>
<NameCriteria>
  <Name>
    <LastName   MatchMode="SIMILAR">JONES</LastName>
  </Name>
</NameCriteria>
```

```
<PosCriteria AnyBranch="false">
  <Pcc>B4T0</Pcc>
  <Pcc>22L0</Pcc>
</PosCriteria>
<ReturnOptions   MaxItemsReturned="200"
               ResponseFormat="STL"
               ViewName="TripSearchTN"
               SearchType="ACTIVE"/>
</ReservationReadRequest>
</ReadRequests>
</Trip_SearchRQ>
```

USE CASE

Search PNRs within any branch.

```
<Trip_SearchRQ Version="x.x.x" ... >
<ReadRequests>
<ReservationReadRequest>
<NameCriteria>
   <Name>
     <LastName   MatchMode="START">PAL</LastName>
   </Name>
</NameCriteria>
<PosCriteria AnyBranch="true"/>
<ReturnOptions   MaxItemsReturned="200"
               ResponseFormat="STL"
               ViewName="TripSearchTN"/>
</ReservationReadRequest>
</ReadRequests>
</Trip_SearchRQ>
```

3.19. Destination Search Criteria

Read Request Type:	*ReservationReadRequest*
Elements:	*StartCityCode, StartDate, EndCityCode, EndDate*
Destination Criteria added to allow users to search PNRs with Air segments which include specific pairs of Start and End Cities or pairs of Start and End Dates based on connecting flights.	

USE CASE

Search for AS PNR's by various destination attributes e.g. the city when the flight starts, in conjunction with name search criteria.

```
<Trip_SearchRQ Version="x.x.x" ... >
         <ReadRequests>
            <ReservationReadRequest>
               <NameCriteria>
                  <Name>
                     <FirstName>TEST</FirstName>
                     <LastName   MatchMode="EXACT">WEIGHT</LastName>
                  </Name>
               </NameCriteria>
               <PosCriteria AirlineCode="AB"/>
               <DestinationCriteria>
```

```
                  <StartCityCode>DUS</StartCityCode>
                  <StartDate>2015-06-16</StartDate>
                  <EndCityCode>HAJ</EndCityCode>
               </DestinationCriteria>
               <ReturnOptions   MaxItemsReturned="1000"
                               ResponseFormat="STL"
                               ViewName="TripSearchBlobX"/>
            </ReservationReadRequest>
         </ReadRequests>
</Trip_SearchRQ>
```

USE CASE

Search for AS PNR's by various destination attributes e.g. the city when the flight starts, in conjunction with the search by phone number.

```
<Trip_SearchRQ Version="x.x.x" ...>
         <ReadRequests>
            <ReservationReadRequest>
               <TelephoneCriteria>
                  <PhoneNumber    MatchMode="EXACT">8176821888</PhoneNumber>
               </TelephoneCriteria>
               <PosCriteria AirlineCode="AB"/>
               <DestinationCriteria>
                  <StartCityCode>DUS</StartCityCode>
                  <StartDate>2015-09-21</StartDate>
                  <EndCityCode>MUC</EndCityCode>
               </DestinationCriteria>
               <ReturnOptions  MaxItemsReturned="1000"  ResponseFormat="STL"
ViewName="TripSearchBlobX"/>
            </ReservationReadRequest>
</ReadRequests>
</Trip_SearchRQ>
```

3.20. Token Criteria

Read Request Type:	*ReservationReadRequest*
Elements:	*Token* (required), *Page* (optional)
For more details and samples go to section describing Asynchronous searches	

3.21. Result Action

Read Request Type:	*ReservationReadRequest*
Elements:	*QueuePlace Action*
QueuePlace Action Elements:	*QueuePlacement*

Attributes:	*include SearchResults*
The user can route the PNR to a specific queue for further action, e.g. ticketing, printing, etc. – *QueuePlacement* includes elements *QueueName, QueueNumber, CityCode, PitCode*	

3.22. Return Options

Read Request Type:	ReservationReadRequest
Elements:	SubjectAreas (consists of list of SubjectArea elements)
Attributes:	ViewName, MaxItemsReturned, PageSize, ResponseFormat, SearchType
The user can specify what is returned in the response. • SubjectArea – see more in the section describing subject areas • ViewName – see more in the section describing views • MaxItemReturned – maximum number of items which appear in RS. It is limited to maximum 800 PNRs for synchronous searches in all service versions, unless specified differently in a user dedicated view. • PageSize – maximum number of items which appear on page for asynchronous searches only • ResponseFormat – STL • SearchType – ACTIVE, INACTIVE or BOTH. See more in the section describing Past Date PNR search.	

Complete payload samples

4

4.1. Sample RQ/RS for STL file format

Version x.x.x represents the current version of service

More samples in separate files

```
<Trip_SearchRQ   Version="x.x.x"   xmlns="http://webservices.sabre.com/triprecord">
   <ReadRequests>
      <ReservationReadRequest>
         <NameCriteria>
            <Name>
               <FirstName   MatchMode="EXACT_NO_COMPRESS">JON</FirstNam e>
               <LastName  MatchMode="SIMILAR">SMITH</LastName>
            </Name>
         </NameCriteria>
         <PosCriteria  AnyBranch="false"/>
         <ReturnOptions MaxItemsReturned="200" ResponseFormat="STL"
ViewName="TripSearchTN"/>
      </ReservationReadRequest>
   </ReadRequests>
</Trip_SearchRQ>
```

The above request will do an equivalent name search for *-JON/SMITH looking only at Active PNR's in Native Sabre. All PNR's in your signed in agency will be searched and a list returned in the response XML. Response:

```
<Trip_SearchRS  TimeStamp="2017-03-21T07:31:12"  Target="Production"  Version=" 4.5.0"  xm
<Trip_SearchRS  TimeStamp="2017-03-24T07:12:42"  Target="Production"  Version=" 4.5.0"
xmlns="http://webservices.sabre.com/triprecord"
xmlns:ns2="http://services.sabre.com/STL/v01"
xmlns:ns4="http://webservices.sabre.com/sabreXML/2003/07"
xmlns:ns3="http://webservices.sabre.com/pnrbuilder"
xmlns:ns6="http://tds.sabre.com/itinerary" xmlns:ns5="http://tds.sabre.com/rules"
xmlns:ns8="http://services.sabre.com/STL/v02"
xmlns:ns7="http://services.sabre.com/res/orr/v0"
xmlns:ns13="http://www.sabre.com/eps/schemas"
xmlns:tir37="http://services.sabre.com/res/tir/v3_7"
xmlns:ns9="http://www.sabre.com/ssg/des/v1"
xmlns:ns12="http://opentravel.org/common/v02"
xmlns:ns11="http://www.OpenTravel.org/ns/OTA2/AppInfo_v01_00"
xmlns:tir39="http://services.sabre.com/res/tir/v3_9"
xmlns:ns10="http://services.sabre.com/STL_Header/v02_00"
xmlns:stl114="http://webservices.sabre.com/pnrbuilder/v1_14"
xmlns:ns15="http://webservices.sabre.com/servicesplatform/orr/rules/1.0.0"
xmlns:ns14="http://tds.sabre.com/distribution"
xmlns:stl19="http://webservices.sabre.com/pnrbuilder/v1_15"
xmlns:or16="http://services.sabre.com/res/or/v1_6"
xmlns:or17="http://services.sabre.com/res/or/v1_7"
xmlns:or18="http://services.sabre.com/res/or/v1_8"
xmlns:or19="http://services.sabre.com/res/or/v1_9">
```

```
<Success>Success</Success>
<ReservationsList NumberResults="15" NumberPages="1" TotalResults="15">
<Reservations>
      <Reservation Locator="GMYXIE">
         <stl19:GetReservationRS  Version="1.19.0"/>
      </Reservation>
      <Reservation Locator="EZHMCG">
         <stl19:GetReservationRS  Version="1.19.0"/>
      </Reservation>
      <Reservation Locator="MDIVGB">
         <stl19:GetReservationRS  Version="1.19.0"/>
      </Reservation>
      <Reservation Locator="EQVLHO">
         <stl19:GetReservationRS  Version="1.19.0"/>
      </Reservation>
      <Reservation Locator="DLNXHV">
         <stl19:GetReservationRS  Version="1.19.0"/>
      </Reservation>
      <Reservation Locator="EUNPHX">
         <stl19:GetReservationRS  Version="1.19.0"/>
      </Reservation>
      <Reservation Locator="EUPWYN">
         <stl19:GetReservationRS  Version="1.19.0"/>
      </Reservation>
      <Reservation Locator="HMLEEX">
         <stl19:GetReservationRS  Version="1.19.0"/>
      </Reservation>
      <Reservation Locator="EWONFD">
         <stl19:GetReservationRS  Version="1.19.0"/>
      </Reservation>
      <Reservation Locator="HIVULQ">
         <stl19:GetReservationRS  Version="1.19.0"/>
      </Reservation>
      <Reservation Locator="KVWERA">
         <stl19:GetReservationRS  Version="1.19.0"/>
      </Reservation>
      <Reservation Locator="DLLLAO">
         <stl19:GetReservationRS  Version="1.19.0"/>
      </Reservation>
      <Reservation Locator="MNBJBJ">
         <stl19:GetReservationRS  Version="1.19.0"/>
      </Reservation>
      <Reservation Locator="HBRPAW">
         <stl19:GetReservationRS  Version="1.19.0"/>
      </Reservation>
      <Reservation Locator="EZDWEZ">
         <stl19:GetReservationRS  Version="1.19.0"/>
      </Reservation>
</Reservations>
</ReservationsList>
</Trip_SearchRS>
```

Error and warning messages

5

5.1. List of Codes

The following is the list of error and warning messages that are returned. If any of those occurred, please read carefully the message displayed. If the request requires an adjustment, please correct its structure and retry. In case of issues with service availability, please contact Technical Support.

Error Code	Message
200002	Search across past date PNRs is not permitted
200003	TN User cannot search AA PNRs
200004	Unsupported service version
200005	Max number of requested PNRs exceeded view limit [800] – limit is defined per ViewName, e.g. 800
200006	Number of results exceeded view limit or requested PNRs limit
200101	Request validation error - Invalid name
200102	Request validation error - Empty PCC List
200103	Subsystem communication error
200104	Unable to Process error – Subsystem Error
200105	Unable to Process error – Invalid Request
200106	Unable to Process error – PNR Service Unavailable
200201	Unable to process PNR search
200202	Unable to process DB search
200203	DB search timeout
200204	There is no primary criteria specified
200205	There is no POS criteria specified
200206	Too many results – specify more data
200207	Primary criteria too weak – add more specific primary criterion
200208	Empty PCC list after Branch access check
200301	Token does not exist
200302	Response is not ready yet
200303	Request failed
200304	Request expired
200305	Page does not exist
200306	Request rejected
200401	Invalid flight number format or number of entries it too long
200402	Invalid airline code format or number of entries it too long
200403	Invalid class of service format or number of entries it too long
200404	Invalid name type format or number of entries it too long
200405	Invalid tier level format or number of entries it too long
200406	Invalid pos format or number of entries it too long
200407	Invalid ssr format or number of entries it too long
700001	General PNR error

700002	Invalid PNR locator
700003	Invalid request
700004	Invalid request format
700005	Invalid request view
700001	General PNR error
700002	Invalid PNR locator

5.2. Samples

There is a couple of examples presenting the most popular error responses given. Version x.x.x represents the current version of service.

USE CASE

The service was invoked with an invalid security token. This is a generic error message, not specific for the Trip_SearchRQ service. The following content is included in the response. Please establish the web service session again, include the proper token in the request, verify the endpoint used and retry the call.

```
<soap-env:Body>
<soap-env:Fault>
   <faultcode>soap-env:Client.InvalidSecurityToken</faultcode>
   <faultstring>Invalid or Expired binary security token: ...
   <detail>
      <StackTrace>com.sabre.universalservices.base.session.SessionException:
errors.session.USG_INVALID_SECURITY_TOKEN</StackTrace>
   </detail>
</soap-env:Fault>
</soap-env:Body>
```

USE CASE

The service was invoked with no primary criteria. The following is the response. The request should be corrected via adding at least single primary criteria and invoked again afterwards.

```
<Trip_SearchRS  Version="x.x.x.">
<Errors>
   <Error ErrorCode="200204" Severity="MINOR" ErrorMessage="There is no primary
criteria specified"/>
</Errors>
</Trip_SearchRS>
```

USE CASE

The service was invoked, although the database was temporarily not available Such cases may happen especially on non-production evironments. Please retry with the request in a couple of seconds.

```
<Trip_SearchRS  Version="x.x.x" xmlns="http://webservices.sabre.com/triprecord"
xmlns:ns3="http://webservices.sabre.com/pnrbuilder"
<Errors>
   <Error ErrorCode="200202" Severity="MODERATE" ErrorMessage="Unable to process DB
search"/>
</Errors>
</Trip_SearchRS>
```

USE CASE

The service was invoked with an invalid “ViewName” provided in the request message. The following is the response. The request should be corrected, and a valid view should be used.

```
<Trip_SearchRS Version="x.x.x" xmlns="http://webservices.sabre.com/triprecord"
xmlns:ns3="http://webservices.sabre.com/pnrbuilder"
<Errors>
   <Error ErrorCode="700005" Severity="MODERATE" ErrorMessage="Invalid request view"/>
</Errors>
</Trip_SearchRS>
```

Glossary

6

Term	Explanation
AAA	Agent Assembly Area – refers to the buffer in the Sabre system where content is retained while a Sabre Host session is active.
AE	Air Extra - Additional products and services offered by airlines in addition to the airfare are sold separately. Makes products and services available throughout within the normal workflow. Examples of Air Extras are pre-purchased seat assignments and checked bag fees.
AS	Sabre Airline Solutions
EMD	Electronic Miscellaneous Document
FOID	Form of Identification is used to advise carrier what identification the passenger will present upon check-in for e-ticket travel
Locator	PNR record locator
Native Sabre System	Sabre Red Workspace application
OSI	Other Supplementary Information can be used when action or reply from carrier is not required
OTA	Open Travel Alliance XML format
PCC	Pseudo City Code uniquely identifies travel agency in the same way that a city code identifies a city
PNR	Passenger Name Record
POS	Point of Sale
PSS	Passenger Service System also known as Sabre Host
SFPD	Secure Flight Passenger Data
SSR	Special Service Request is used when action or response from carrier is required
STL	SABRE XML format
Segment	Field of a Passenger Name Record holding actual booking (Air, Car, Hotel etc.)
TN	Sabre Travel Network

Technical Support

7

If you have any questions or need assistance, please contact our Global Customer Support Center.

7.1. Telephone

When reporting **production or other critical/time sensitive issues**, please contact us via the telephone:

Sabre Travel Network and 3rd parties:

- USA: 800-678-9460
- Canada: 682-605-5570
- International: 598-2-518-6020, or your regional Sabre Software help desk

Sabre Airline Solutions:

Country	Toll free number
Antigua	888-832-4738
Argentina	0800-666-1664
Australia	1-800-081-993
Austria	800-291-705
Bahamas	1-800-389-0417
Bahrain	800-00-002 (WSC 5050)
Belarus	880-0114 PIN 375
Belgium	0800-77-029
Bolivia	800-10-0350
Brazil	0800-891-9210
Brunei	800-013 PIN 673
Canada	1-866-598-1706
Chile	800-412555
China	4001-202-315
Colombia	01-800-954-1326
Cyprus	800-96110
Czech Republic	800-700-117
Denmark	808-85884
Egypt - Cairo	7955-770 PIN 5670

Egypt - Other	02-7955-770 PIN 5670
El Salvador	800-0000-0011
Estonia	800-12-122 PIN 5047
Finland	0800-914-860
France	0800-909-657
Germany	0800-181-7245
Greece	00800-16-122-055-533
Hong Kong	800-908-742
Iceland	800-8667
India	000-800-100-6116
Indonesia	001-803-016-1722
Ireland	1-800-657-198
Israel	1-809-246-033
Italy	800-787-417
Jamaica	1-866-402-6835
Japan	0053-116-0811
Korea	0030-813-1943
Malaysia	1-800-813-609
Malta	800-90112 PIN 356
Mexico	01-800-123-8537
Netherlands	0800-023-2237
New Zealand	0800-450-960
Norway	800-18-798
Pakistan	00800-9004-4226
Panama	00800-226-0662
Paraguay	009-800-598-1-0004
Peru	0800-52-226
Philippines	1-800-111-00338 or 1-800-111-00339
Poland	800-900-807
Russia	810-800-240-31012
Saudi Arabia	1-800-11 PIN 5671
Singapore	800-101-1651
South Africa	0800-980-981
Spain	900-995-926
Sweden	0200-285-836
Switzerland	0800-894-534
Tahiti	888-832-4738
Thailand	1. Dial 1-800-000-133 (AT&T) 2. Wait for the recording asking for the number you are dialing. 3. Dial 888-832-4738.

Trinidad and Tobago	888-870-9002
UAE	800-035-702-569
UK	0800-0288446
Uruguay	2518-6642
USA	1-888-421-8889 or 1-800-677-0856
Venezuela	0800-100-3851
Vietnam	1. Dial 1-201-0288 (AT&T Toll Free Number). 2. Wait for the recording asking for the number you are dialing. 3. Dial 866-947-8059.
Countries with no-toll free service	+1 770 261 0080 (toll call).

7.2. Email

Email is monitored 24 x 7 with a response within 24 hours or less:

- webservices.support@sabre.com
- SabreSonic.helpdesk@sabre.com (for Sabre Airline Solutions)

Providing the support desk with the necessary files at the time of initial contact improves our ability to troubleshoot and provide a timely resolution.

To better serve you please note the following:

- Please include the Sabre Pseudo City Code (PCC) or Domain where the issue is occurring.
- When reporting an issue with SOAP based Sabre APIs the input and output payloads are required. Please attach the payloads as separate files, and name them clearly.
- To help ensure that our environment is free of viruses, our policy mandates that all messages received by Sabre from external sources follow special file name guidelines. File names must end in ".sabre.zip" or the zipped attachment will be removed by the email server (for example, “docs.zip” would need to be renamed to “docs.sabre.zip”).
- If your correspondence is regarding a previously reported issue, please include the service incident (“SI”) number in the subject line of your message.
- The subject line should contain a brief description of the problem or question. Please avoid a subject line containing only the words ‘Question’, ‘Issue’, ‘Problem’, etc.
- In the body of the email include as much information as possible to explain the problem and the steps necessary to recreate it.

7.3. Links

Find more details on the following pages:

- https://myhelp.sabre.com/
- http://community.sabre.com/ (Sabre Community Portal for Sabre Airline Solutions)
- https://developer.sabre.com/resources/support