THIS DRAWING IS UNPUBLISHED. RELEASED FOR PUBLICATION 20
© COPYRIGHT 20 - ALL RIGHTS RESERVED.

LOC	DIST
ES	-

REVISIONS

P	LTR	DESCRIPTION	DATE	DWN	APVD
	D1	REVISED PER ECO-11-005033	16APR2011	RK	HMR
	D2	REVISED PER ECR-13-003041	20FEB2013	E.L	S.Y
	D3	REVISED PER ECR-13-007095	26APR2013	E.L	S.Y

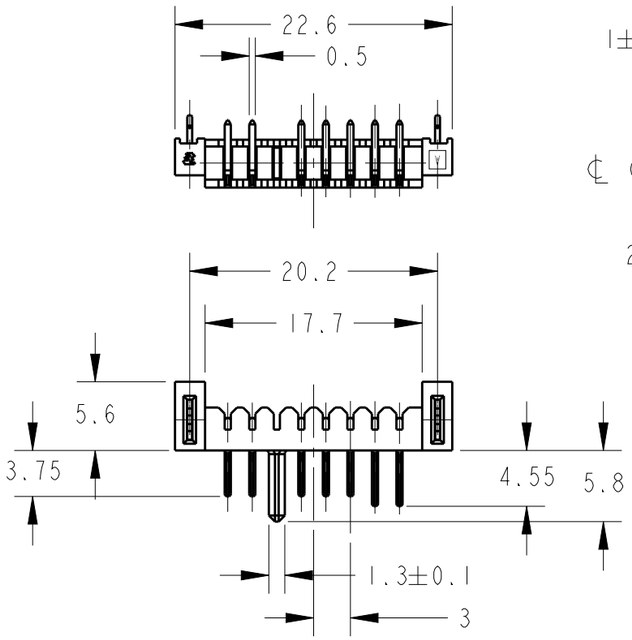

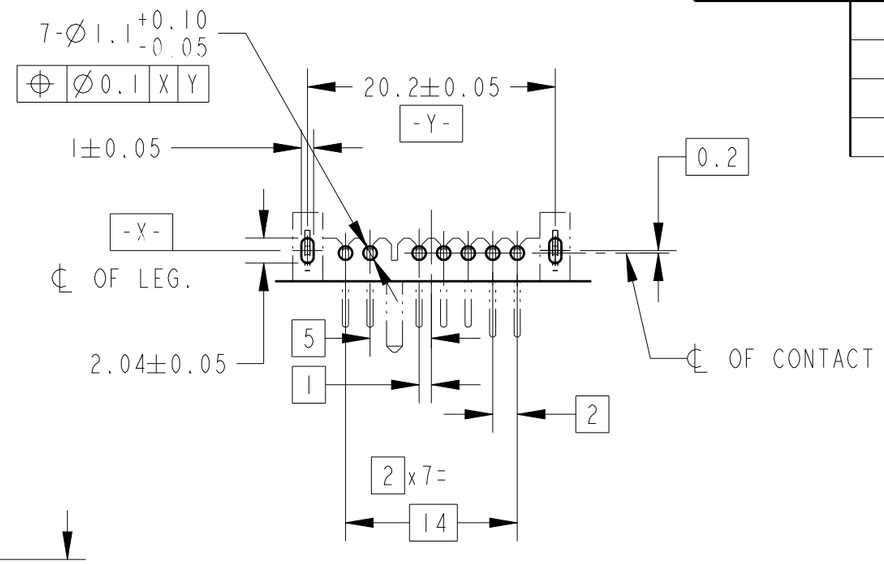

REFERENCE P.C BOARD LAYOUT
P.C.BOARD THK. 0.8~1.2
(VIEW FROM CONNECTOR MOUNTING SIDE)

1 MATERIAL
CONTACT: COPPER ALLOY
HOUSING: THERMOPLASTIC RESIN UL94V-0 BLACK
RETENTION LEG: COPPER ALLOY

2 FINISH
CONTACT: NICKEL ALL OVER UNDER PLATING,
GOLD PLATING AT CONTACT AREA,
GOLD FLASH PLATING AT LEAD AREA,
RETENTION LEG: NICKEL ALL OVER UNDER PLATING,
TIN PLATING.

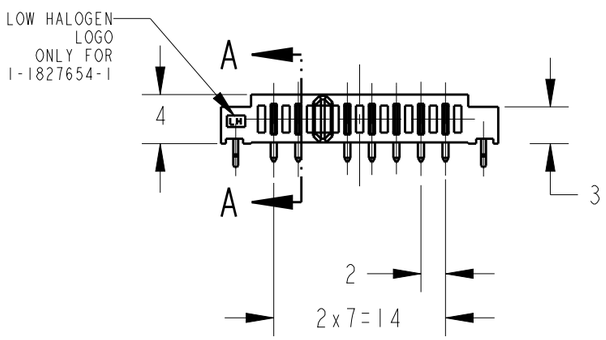

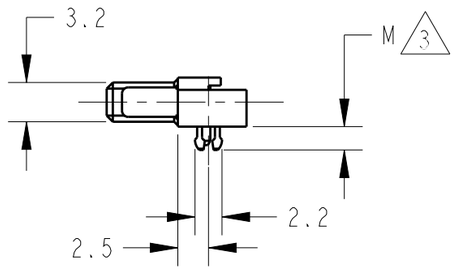

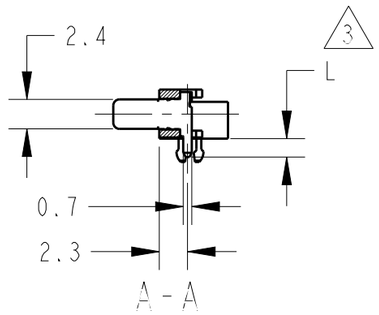

1827654-1, 1-1827654-1: AS SHOWN

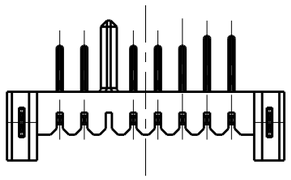

	3		
THERMOPLASTIC RESIN (LOW HALOGEN:BR<900PPM,CL<900PPM,BR+CL<1500ppm)	1.9	1.5	1-1827654-1
THERMOPLASTIC RESIN	2.6	2.1	1827654-2
THERMOPLASTIC RESIN	1.9	1.5	1827654-1
HOUSING MATERIAL	DIM "M"	DIM "L"	P/N

DIMENSIONS: mm

TOLERANCES UNLESS OTHERWISE SPECIFIED: ±0.3
~~0 PLC ±~~
~~1 PLC ±0.1~~
~~2 PLC ±0.01~~
~~3 PLC ±0.001~~
~~4 PLC ±0.0001~~
ANGLES ±3°

MATERIAL SEE NOTE
FINISH SEE NOTE

DWN	T.KATANO	04JUL05
CHK	T.KIMURA	04JUL05
APVD	T.KIMURA	04JUL05
PRODUCT SPEC	108-78292	
APPLICATION SPEC	-	
WEIGHT	1.0g	

TE Connectivity

NAME
PLUG ASSEMBLY 7POS.
2mm PITCH BATTRY CONNECTOR
-

SIZE	CAGE CODE	DRAWING NO	RESTRICTED TO
A3	00779	C-1827654	-

CUSTOMER DRAWING | SCALE 2:1 | SHEET 1 OF 2 | REV D3

THIS DRAWING IS UNPUBLISHED. RELEASED FOR PUBLICATION 20
© COPYRIGHT 20 - ALL RIGHTS RESERVED.

LOC	DIST
ES	-

REVISIONS

P	LTR	DESCRIPTION	DATE	DWN	APVD
	-	SEE SHEET 1	-	-	-

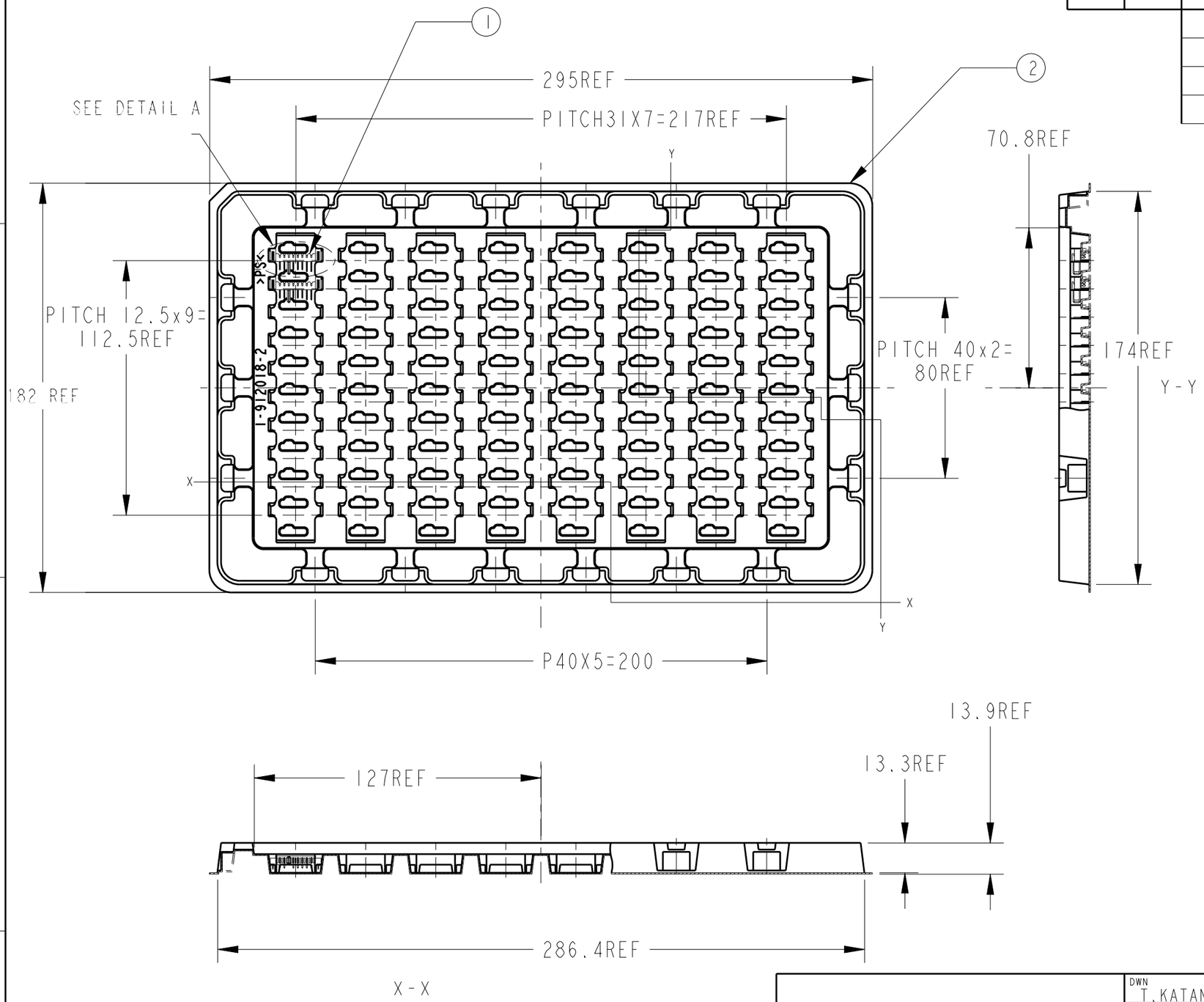

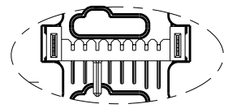

DETAIL A
SCALE 1:1

AS SHOWN: 1827654-1/-2
1-1827654-1

DIMENSIONS: mm	TOLERANCES UNLESS OTHERWISE SPECIFIED: 0 PLC ±- 1 PLC ±0.1 2 PLC ±0.01 3 PLC ±0.001 4 PLC ±0.0001 ANGLES ±3°	DWN T.KATANO 04JUL05	TE Connectivity
		CHK T.KIMURA 04JUL05	NAME PLUG ASSEMBLY 7POS. 2mm PITCH BATTRY CONNECTOR -
		APVD T.KIMURA 04JUL05	
MATERIAL SEE NOTE	FINISH SEE NOTE	PRODUCT SPEC 108-78292	
		APPLICATION SPEC -	SIZE A3 / CAGE CODE 00779 / DRAWING NO C-1827654 / RESTRICTED TO -
		WEIGHT 1.0g	
		CUSTOMER DRAWING	SCALE 1:1 / SHEET 2 OF 2 / REV D3

1470-19 (3/11)