DaSSH4: Hackathon Preparation

Hackathon activities

This is just a suggestion....

- Thursday
  - LogicaHealth & CIBMTR Reporting App
- Friday
  - Direct FHIR API
  - HLA to FHIR
    - HML2FHIR
    - TARR2FHIR

NMDP Okta logins

- Two applications require NMDP Okta logins
  - CIBMTR Reporting App (LogicaHealth)
  - HML Gateway – HML2FHIR

- Temporary user accounts and passwords sent to hackathon participants.
  - Same username/password works for both applications
  - No MFA needed

REST API authorization tokens

Access information sent to hackathon participants

- Direct FHIR API
  - Application Client ID
  - Application Client Secret
  - Application Client Scope
  - Service Account Username
  - Service Account Password

Needed to generate Bearer token

- HML Gateway API (used for HML2FHIR)
  - Refresh Token

Github

Documentation
Examples
Code

nmdp-bioinformatics/dash: Da

github.com/nmdp-bioinformatics/dash

Search or jump to... / Pull requests Issues Marketplace Explore

nmdp-bioinformatics / dash

Unwatch 20 Star 12 Fork 10

Code Issues 15 Pull requests Actions Projects Wiki Security Insights ...

master 2 branches 0 tags Go to file Add file Code

bmilius-nmdp Merge pull request #46 from bmilius-... 886871b 4 hours ago 101 commits

dassh4	dass4, scripts and examples for directfhir and hml2f...	4 hours ago
fhir	fixed json files	4 years ago
hla_hl7	fix empty links	5 years ago
hml	HML examples with KIR	7 years ago
hml_fhir_converter	Fix version #	4 years ago
miring_validator	added miring validator pdf	5 years ago
CONTRIBUTING.md	adding placeholder contributing doc	7 years ago
DASH9.png	Add files via upload	3 years ago
DaSH Validation agenda....	Add files via upload	2 years ago
DaSH11 banner.png	add DaSH 11 banner	5 months ago
DaSH12 banner.png	Add files via upload	2 months ago
DaSH8.png	Add files via upload	3 years ago
DaSSH2 symposium age...	Add files via upload	last month
	Add files via upload	last month

https://github.com/nmdp-bioinformatics/dash/security

About

Data Standards Hackathon for NGS based typing.

Readme

LGPL-3.0 License

Releases

No releases published
Create a new release

Packages

No packages published
Publish your first package

Contributors 7

https://github.com/nmdp-bioinformatics/dash

dash/dassh4 at master · bmilius

github.com/bmilius-nmdp/dash/tree/master/dassh4

Search or jump to... / Pull requests Issues Marketplace Explore

bmilius-nmdp / dash

forked from nmdp-bioinformatics/dash

Unwatch 1 Star 0 Fork 10

Code Pull requests Actions Projects Wiki Security Insights Settings

master dash / dassh4 /

Go to file Add file ...

This branch is even with nmdp-bioinformatics:master. Contribute Fetch upstream

bmilius-nmdp added bundle examples for uploading to LogicaHealth `bf587a0` 4 minutes ago History

..		
directfhir	directfhir examples	7 hours ago
hml2fhir	dass4, scripts and examples for directfhir and hml2fhir	12 hours ago
logicahealth	added bundle examples for uploading to LogicaHealth	4 minutes ago
DaSSH4_HackathonPrep.pdf	added hackathon prep slides	40 minutes ago

© 2021 GitHub, Inc. Terms Privacy Security Status Docs Contact GitHub Pricing API Training Blog About

dash/DaSSH4_HackathonPrep

github.com/nmdp-bioinformatics/dash/blob/master/dassh4/DaSSH4_HackathonPrep.pdf

nmdp-bioinformatics / dash

Unwatch 20 | Star 12 | Fork 10

Code | Issues 15 | Pull requests | Actions | Projects | Wiki | Security

master | dash / dassh4 / DaSSH4_HackathonPrep.pdf | Go to file

bmilius-nmdp added hackathon prep slides — Latest commit 65b1b38 6 minutes ago — History

1 contributor

8.71 MB — Download

DATA TRANSFORMATION
Data. Knowledge. Lives Saved.

DaSSH4: Hackathon Preparation

Hackathon activities

dash/dassh4 at master · bmilius

github.com/bmilius-nmdp/dash/tree/master/dassh4

Search or jump to... / Pull requests Issues Marketplace Explore

bmilius-nmdp / dash

forked from nmdp-bioinformatics/dash

Unwatch 1 Star 0 Fork 10

Code Pull requests Actions Projects Wiki Security Insights Settings

master dash / dassh4 /

Go to file Add file ···

This branch is even with nmdp-bioinformatics:master.

Contribute Fetch upstream

bmilius-nmdp added bundle examples for uploading to LogicaHealth bf587a0 7 minutes ago History

..

directfhir	directfhir examples	7 hours ago
hml2fhir	dass4, scripts and examples for directfhir and hml2fhir	12 hours ago
logicahealth	added bundle examples for uploading to LogicaHealth	7 minutes ago
DaSSH4_HackathonPrep.pdf	added hackathon prep slides	43 minutes ago

© 2021 GitHub, Inc. Terms Privacy Security Status Docs Contact GitHub Pricing API Training Blog About

dash/dassh4/directfhir at mast

github.com/nmdp-bioinformatics/dash/tree/master/dassh4/directfhir

Search or jump to... / Pull requests Issues Marketplace Explore

nmdp-bioinformatics / dash

Unwatch 20 Star 12 Fork 10

Code Issues 15 Pull requests Actions Projects Wiki Security Insights Settings

master dash / dassh4 / directfhir /

Go to file Add file ...

bmilius-nmdp dass4, scripts and examples for directfhir and hml2fhir 73cacb0 5 hours ago History

..

src	dass4, scripts and examples for directfhir and hml2fhir	5 hours ago
20210704_CIBMTR_Direct_FHIR_STU3_API_Con...	dass4, scripts and examples for directfhir and hml2fhir	5 hours ago

© 2021 GitHub, Inc. Terms Privacy Security Status Docs Contact GitHub Pricing API Training Blog About

dash/20210704_CIBMTR_Direc

github.com/nmdp-bioinformatics/dash/blob/master/dassh4/directfhir/20210704_CIBMTR_Direct_FHIR_STU3_API_Connection_Guide.pdf

Search or jump to... / Pull requests Issues Marketplace Explore

nmdp-bioinformatics / dash

Unwatch 20 Star 12 Fork 10

Code Issues 15 Pull requests Actions Projects Wiki Security Insights Settings

master dash / dassh4 / directfhir / 20210704_CIBMTR_Direct_FHIR_STU3_API_Connection_Guide.pdf Go to file

bmilius-nmdp dass4, scripts and examples for directfhir and hml2fhir Latest commit 73cacb0 5 hours ago History

1 contributor

1.67 MB Download

DATA TRANSFORMATION
Data. Knowledge. Lives Saved.

CIBMTR Direct FHIR API Connection Guide

v.210804

Table of Contents

Introduction ***2***

Access Credentials ***3***

Recommended Data Submission Workflow ***6***

Base URLs **6**

Security tags **6**

Step 1: Register patient and receive CRID **7**

Step 2: Search for existing Patient resource with CRID **10**

dash/dassh4/directfhir at mast

github.com/nmdp-bioinformatics/dash/tree/master/dassh4/directfhir

Search or jump to... / Pull requests Issues Marketplace Explore

nmdp-bioinformatics / dash

Unwatch 20 Star 12 Fork 10

Code Issues 15 Pull requests Actions Projects Wiki Security Insights Settings

master dash / dassh4 / directfhir /

Go to file Add file ...

bmilius-nmdp dass4, scripts and examples for directfhir and hml2fhir 73cacb0 5 hours ago History

..

src	dass4, scripts and examples for directfhir and hml2fhir	5 hours ago
20210704_CIBMTR_Direct_FHIR_STU3_API_Con...	dass4, scripts and examples for directfhir and hml2fhir	5 hours ago

© 2021 GitHub, Inc. Terms Privacy Security Status Docs Contact GitHub Pricing API Training Blog About

dash/dassh4/directfhir/src at m

github.com/nmdp-bioinformatics/dash/tree/master/dassh4/directfhir/src

Search or jump to... / Pull requests Issues Marketplace Explore

nmdp-bioinformatics / dash

Unwatch 20 Star 12 Fork 10

Code Issues 15 Pull requests Actions Projects Wiki Security Insights ...

master dash / dassh4 / directfhir / src / Go to file Add file ...

bmilius-nmdp dass4, scripts and examples for directfhir and hml2fhir 73cacb0 5 hours ago History

..

getCRID.py	dass4, scripts and examples for directfhir and hml2fhir	5 hours ago
getCRID.sh	dass4, scripts and examples for directfhir and hml2fhir	5 hours ago
getToken.py	dass4, scripts and examples for directfhir and hml2fhir	5 hours ago
getToken.sh	dass4, scripts and examples for directfhir and hml2fhir	5 hours ago
postObservation_r3.py	dass4, scripts and examples for directfhir and hml2fhir	5 hours ago
postPatient_r3.py	dass4, scripts and examples for directfhir and hml2fhir	5 hours ago
searchObservationCRID_r3.py	dass4, scripts and examples for directfhir and hml2fhir	5 hours ago
searchObservationId_r3.py	dass4, scripts and examples for directfhir and hml2fhir	5 hours ago
searchPatientCRID_r3.py	dass4, scripts and examples for directfhir and hml2fhir	5 hours ago
searchPatientId_r3.py	dass4, scripts and examples for directfhir and hml2fhir	5 hours ago

© 2021 GitHub, Inc. Terms Privacy Security Status Docs Contact GitHub Pricing API Training Blog About

dash/dassh4 at master · bmilius

github.com/bmilius-nmdp/dash/tree/master/dassh4

Search or jump to... / Pull requests Issues Marketplace Explore

bmilius-nmdp / dash

forked from nmdp-bioinformatics/dash

Unwatch 1 Star 0 Fork 10

Code Pull requests Actions Projects Wiki Security Insights Settings

master dash / dassh4 /

Go to file Add file ...

This branch is even with nmdp-bioinformatics:master. Contribute Fetch upstream

bmilius-nmdp added bundle examples for uploading to LogicaHealth bf587a0 7 minutes ago History

..

directfhir	directfhir examples	7 hours ago
hml2fhir	dass4, scripts and examples for directfhir and hml2fhir	12 hours ago
logicahealth	added bundle examples for uploading to LogicaHealth	7 minutes ago
DaSSH4_HackathonPrep.pdf	added hackathon prep slides	43 minutes ago

© 2021 GitHub, Inc. Terms Privacy Security Status Docs Contact GitHub Pricing API Training Blog About

dash/dassh4/logicahealth at m

github.com/bmilius-nmdp/dash/tree/master/dassh4/logicahealth

Search or jump to... / Pull requests Issues Marketplace Explore

bmilius-nmdp / dash

forked from nmdp-bioinformatics/dash

Unwatch 1 Star 0 Fork 10

Code Pull requests Actions Projects Wiki Security Insights Settings

master dash / dassh4 / logicahealth / Go to file Add file ...

This branch is even with nmdp-bioinformatics:master. Contribute Fetch upstream

bmilius-nmdp added bundle examples for uploading to LogicaHealth bf587a0 7 minutes ago History

..

r3_bundle_Anthony_George_1of1.json	added bundle examples for uploading to LogicaHealth	7 minutes ago
r3_bundle_Clayton_Taylor_1of1.json	added bundle examples for uploading to LogicaHealth	7 minutes ago
r3_bundle_David_Brooks_1of1.json	added bundle examples for uploading to LogicaHealth	7 minutes ago
r3_bundle_Dorothy_Andrews_1of1.json	added bundle examples for uploading to LogicaHealth	7 minutes ago
r3_bundle_Douglas_Medina_1of1.json	added bundle examples for uploading to LogicaHealth	7 minutes ago
r3_bundle_Jason_Fox_1of1.json	added bundle examples for uploading to LogicaHealth	7 minutes ago
r3_bundle_Jason_Roberts_1of1.json	added bundle examples for uploading to LogicaHealth	7 minutes ago
r3_bundle_John_Lewis_1of1.json	added bundle examples for uploading to LogicaHealth	7 minutes ago
r3_bundle_Karen_Richards_1of1.json	added bundle examples for uploading to LogicaHealth	7 minutes ago
r3_bundle_Kyle_Willis_1of1.json	added bundle examples for uploading to LogicaHealth	7 minutes ago
r3_bundle_Larry_Bennett_1of1.json	added bundle examples for uploading to LogicaHealth	7 minutes ago

CIBMTR Reporting IG

CIBMTR-REPORTING\Home -

fhir.nmdp.org/ig/cibmtr-reporting/

CIBMTR
CENTER FOR INTERNATIONAL BLOOD & MARROW TRANSPLANT RESEARCH

CIBMTR Reporting Implementation Guide
0.1.4 - Trial Use 1

Home | Table of Contents | Artifact Index | Direct FHIR (STU3) | Support

Table of Contents > **Home**

This page is part of the CIMBTRReporting (v0.1.4: Trial Use 1) based on FHIR R4. This is the current published version. For a full list of available versions, see the Directory of published versions

1 Home

FHIR Version Note
This Implementation Guide is designed to use the R4 version of the HL7® FHIR® standard.
For information on submitting to our Direct FHIR endpoints using FHIR STU3, see the Direct FHIR for STU3 Guide.

Contents:
- Introduction
- CRID Lookup/Creation
- Highlighted Artifacts

This FHIR Implementation Guide (IG) describes how to send data to CIBMTR via HL7® FHIR®.

1.1 Introduction

The Center for International Blood & Marrow Transplant Research® (CIBMTR®) is a research collaboration between the National Marrow Donor Program® (NMDP)/Be The Match® and the Medical College of Wisconsin (MCW). The CIBMTR collaborates with the global scientific community to advance hematopoietic cell transplantation (HCT) and other cellular therapy worldwide to increase survival and enrich quality of life for patients.

The CIBMTR facilitates critical observational and interventional research through scientific and statistical expertise, a large network of transplant centers, and a unique and extensive clinical outcomes database. CIBMTR collects data for HCT recipients using a web-based manual data entry system (FormsNet) and an automated messaging system (A Growable Network Information System (AGNIS)).

CIBMTR is now collecting data through the HL7 Fast Healthcare Interoperability Resources® (FHIR®) standard. This IG describes the technical specification that CIBMTR accepts from third party clients producing FHIR resources for reporting HCT data. It is primarily based on the US Core FHIR IG which defines the minimum conformance requirements for accessing patient data.

Initially, this IG is focused on information required for sending Patient demographic data that is necessary for creating or retrieving a CIBMTR Research ID (CRID), and for reporting Patient resources with a known CRID. We have also begun specifying a profile for reporting laboratory observations, focusing on a set of variables that have been identified as a priority for the CIBMTR Data Transformation Initiative in Fiscal Year 2021.

1.2 CRID Lookup/Creation

A REST API is available for enabling users to lookup and/or create CRIDs based on patient demographic information. This is described in Direct FHIR for

https://fhir.nmdp.org/ig/cibmtr-reporting/

Getting started with LogicaHealth

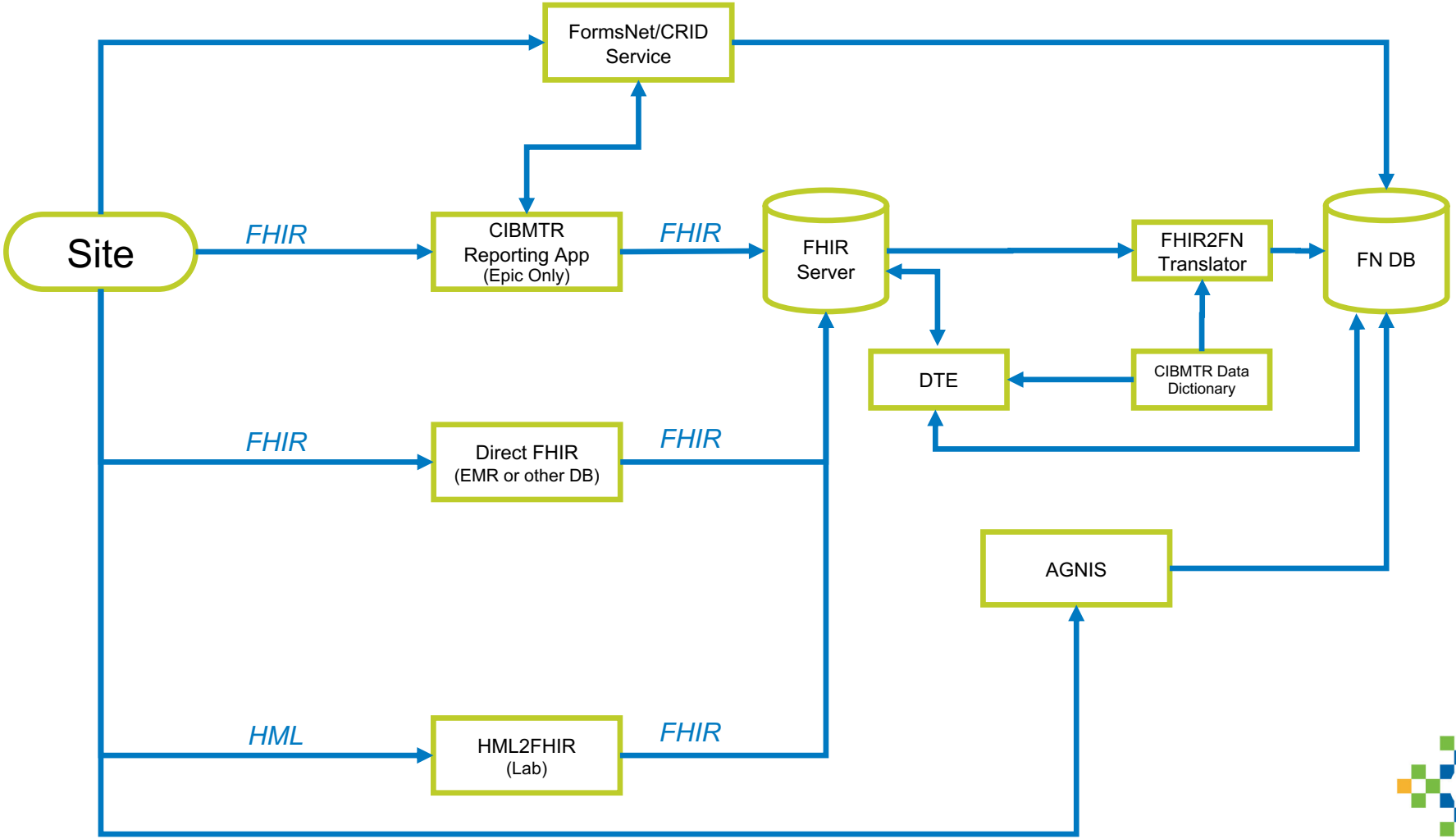
FormsNet/CRID Service
Site
FHIR
CIBMTR Reporting App (Epic Only)
FHIR
FHIR Server
FHIR2FN Translator
FN DB
DTE
CIBMTR Data Dictionary
FHIR
Direct FHIR (EMR or other DB)
FHIR
AGNIS
HML
HML2FHIR (Lab)
FHIR

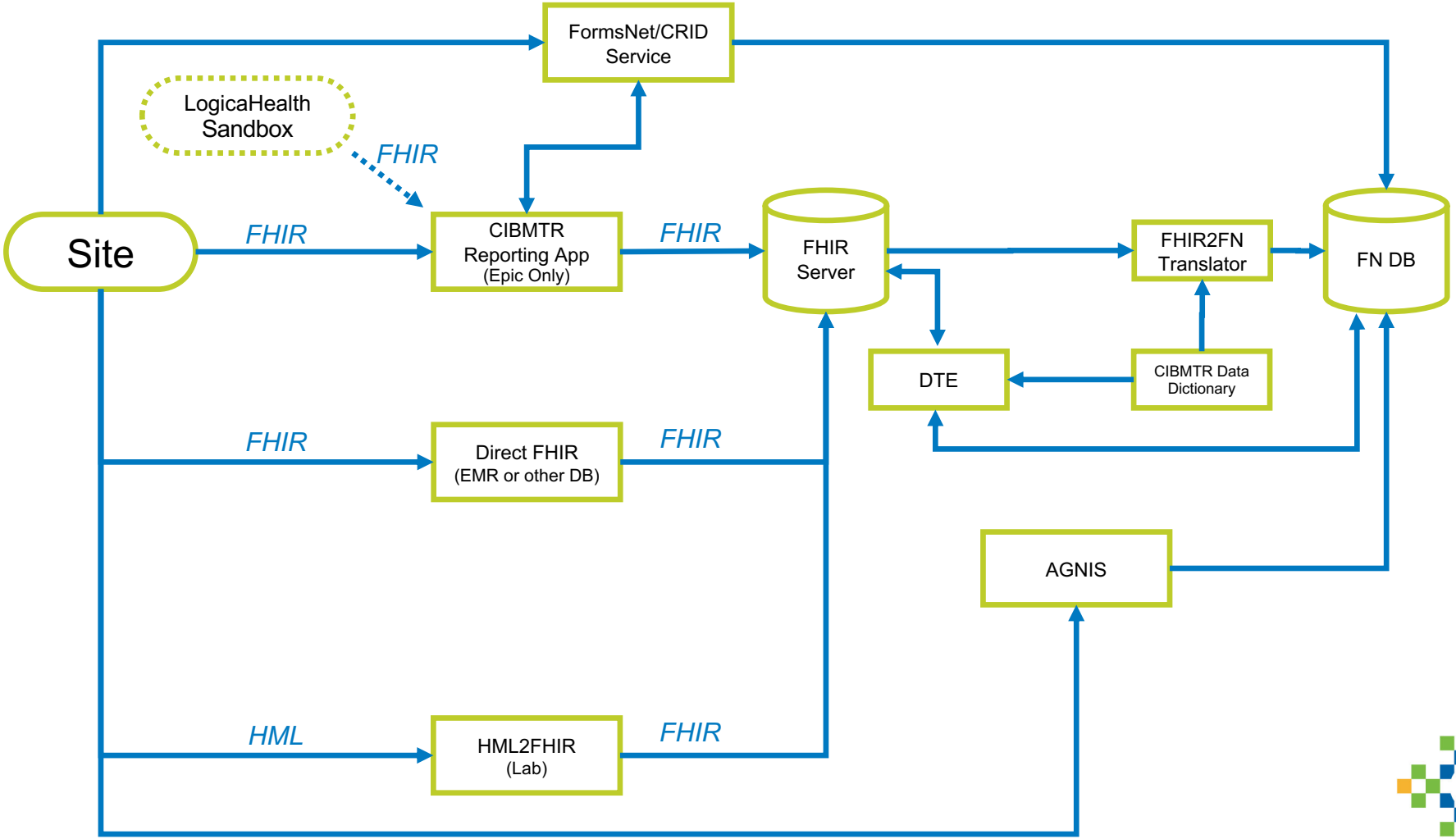
FormsNet/CRID Service
LogicaHealth Sandbox
FHIR
Site
FHIR
CIBMTR Reporting App (Epic Only)
FHIR
FHIR Server
FHIR2FN Translator
FN DB
DTE
CIBMTR Data Dictionary
FHIR
Direct FHIR (EMR or other DB)
FHIR
AGNIS
HML
HML2FHIR (Lab)
FHIR

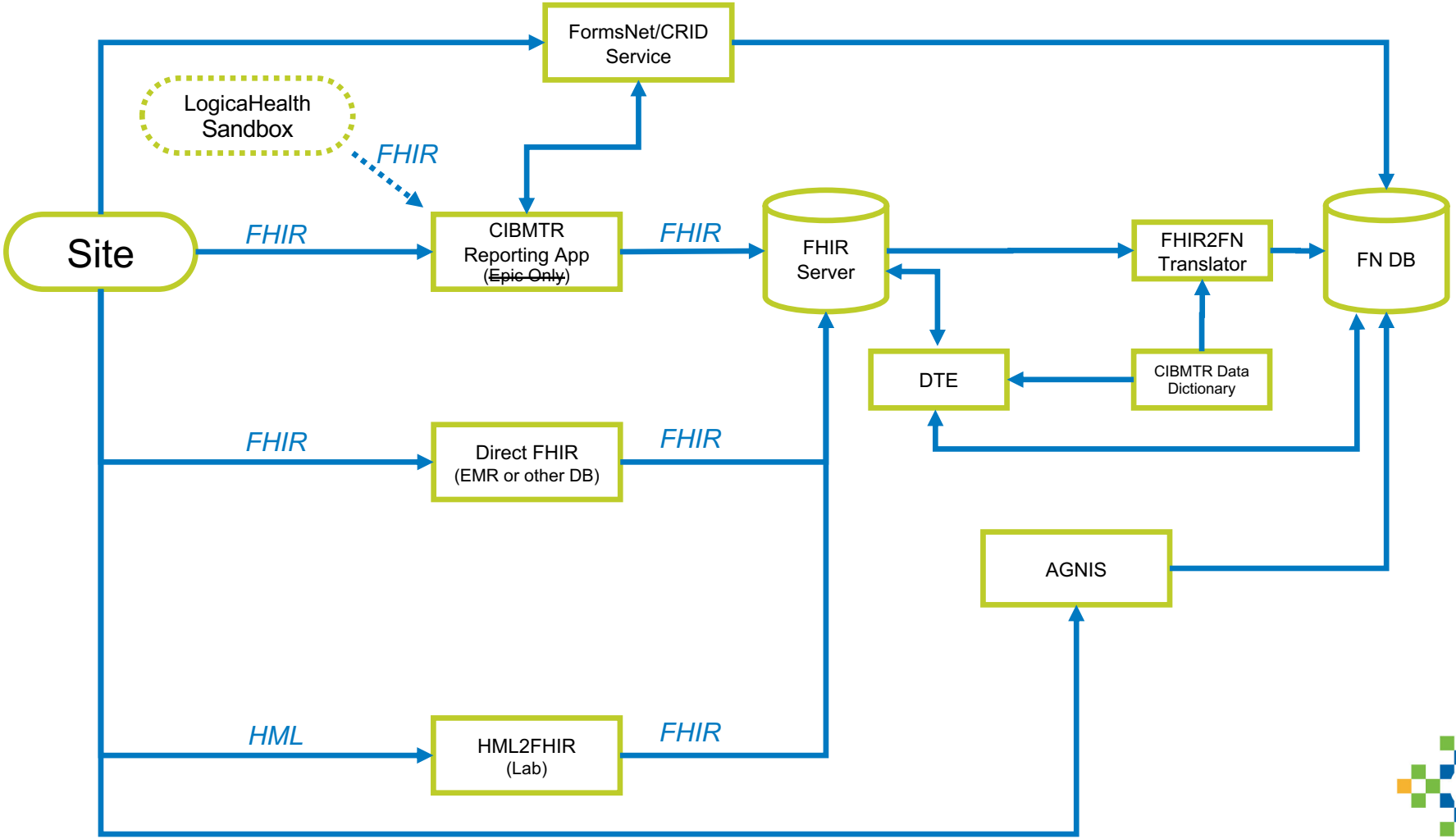
FormsNet/CRID Service
LogicaHealth Sandbox
FHIR
Site
FHIR
CIBMTR Reporting App
(~~Epic Only~~)
FHIR
FHIR Server
FHIR2FN Translator
FN DB
DTE
CIBMTR Data Dictionary
FHIR
Direct FHIR
(EMR or other DB)
FHIR
AGNIS
HML
HML2FHIR
(Lab)
FHIR

Why LogicaHealth?

- EHR simulator with thousands of synthetic Patients
  - Synthea
  - SMART-on-FHIR platform
- Flexibility in creating example Patients with data
  - QA & Testing different scenarios
  - Testing scalability
- Lowest common denominator for development
  - starting point for developing for other EHRs
  - make vendor specific changes only when necessary
- Provides a **free** playground for those that don't have Epic

Logica – information at the spe

logicahealth.org

logica
information at the speed of life

ABOUT SOLUTIONS MEMBERSHIP NEWS MEMBERS ONLY MEMBERSHIP RATES

Logica Health ID

Upcoming Events

There are no upcoming events at this time.

HIGH PRIORITY – COVID-19 FHIR IG released April 3, 2020

- COVID-19 Interoperability Project

Our Mission

To improve health by creating a vibrant, open ecosystem of interoperable applications, knowledge, content, and services.

Our Vision

To be a provider-led organization accelerating the delivery of a platform that supports innovative healthcare applications for the improvement of health and healthcare.

An open culture that..

- Supports both proprietary and open source infrastructures with a component based approach
- Provides the market at large all common assets deemed necessary to promote the standard

Roadmap to Plug-and-Play Interoperability

Logica Health supports a plug-and-play model for interoperability based on a SOA platform with a solid reference architecture. The path to get to a true interoperability model requires a multi-phased evolution that

Contact us

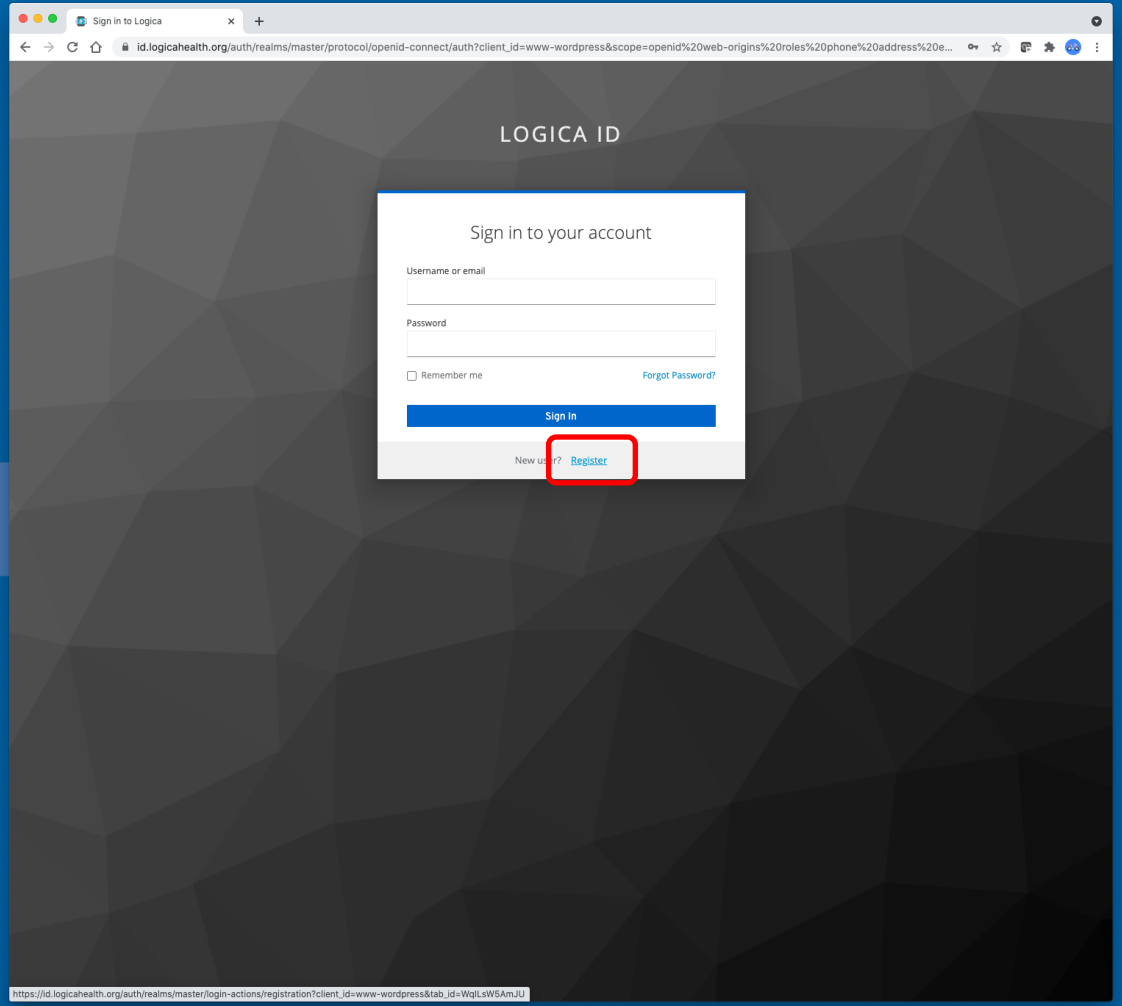
Sign in to Logica
id.logicahealth.org/auth/realms/master/protocol/openid-connect/auth?client_id=www-wordpress&scope=openid%20web-origins%20roles%20phone%20address%20e...
LOGICA ID
Sign in to your account
Username or email
Password
Remember me
Forgot Password?
Sign In
New user? Register
https://id.logicahealth.org/auth/realms/master/login-actions/registration?client_id=www-wordpress&tab_id=WqlLsW5AmJU

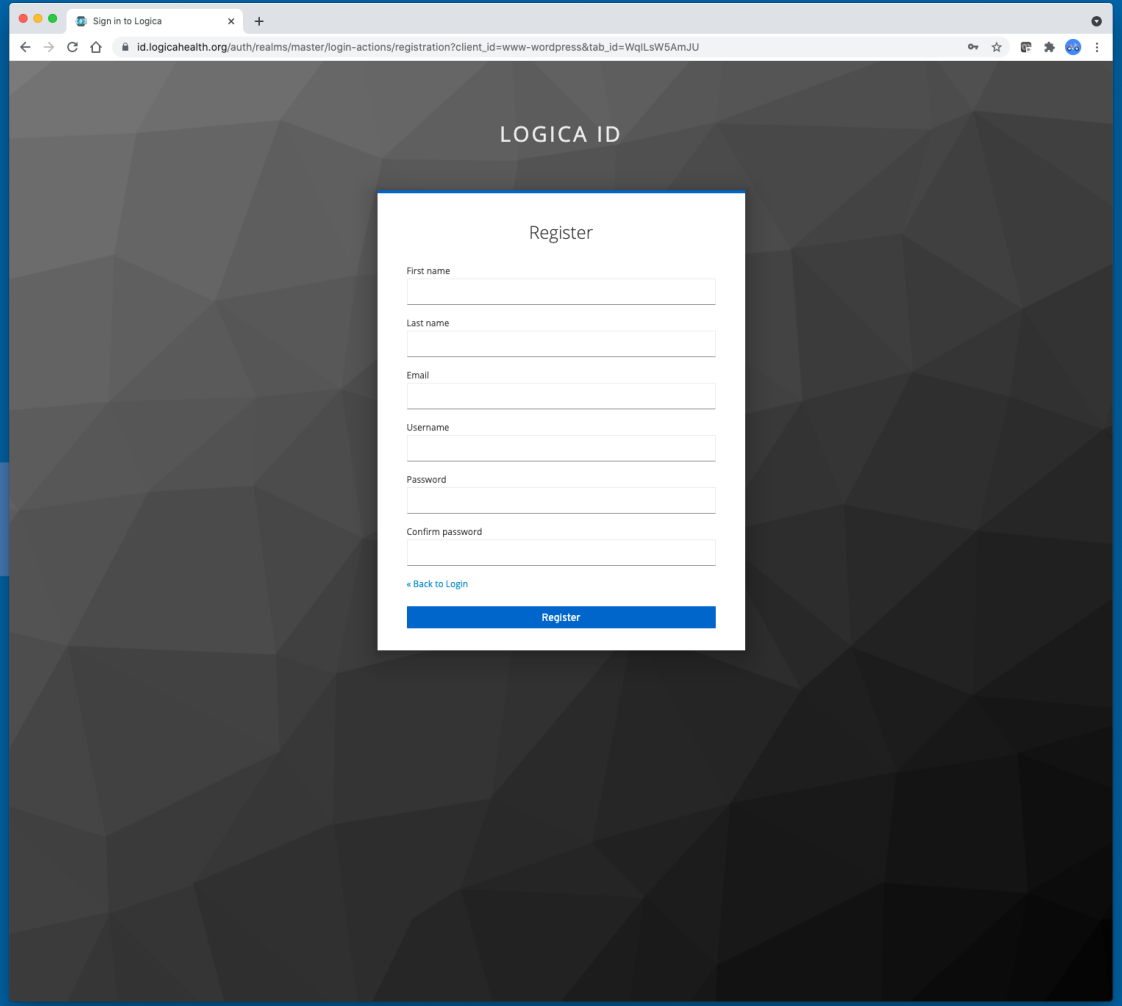
Sign in to Logica
id.logicahealth.org/auth/realms/master/login-actions/registration?client_id=www-wordpress&tab_id=WqILsW5AmJU
LOGICA ID
Register
First name
Last name
Email
Username
Password
Confirm password
« Back to Login
Register

Sign in to Logica

id.logicahealth.org/auth/realms/master/login-actions/required-action?execution=VERIFY_EMAIL&client_id=www-wordpress&tab_id=WqlLsW5AmJU

LOGICA ID

Email verification

You need to verify your email address to activate your account.

An email with instructions to verify your email address has been sent to you.

Haven't received a verification code in your email?
Click here to re-send the email.

Logica – information at the spe

logicahealth.org

logica
information at the speed of life

ABOUT SOLUTIONS MEMBERSHIP NEWS MEMBERS ONLY MEMBERSHIP RATES

- Community Projects
- FHIR Sandbox
- Managed Services
- Marketplace
- Roadmap
- SOLOR
- Terminology & Modeling

Upcoming Events

There are no upcoming events at this time.

HIGH PRIORITY – COVID-19 FHIR IG released April 3, 2020

- COVID-19 Interoperability Project

Our Mission

To improve health by creating a vibrant, open ecosystem of interoperable applications, knowledge, content, and services.

Our Vision

To be a provider-led organization accelerating the delivery of a platform that supports innovative healthcare applications for the improvement of health and healthcare.

An open culture that..

- Supports both proprietary and open source infrastructures with a component based approach
- Provides the market at large all common assets deemed necessary to promote the standard

JOIN TODAY

Roadmap to Plug-and-Play Interoperability

Logica Health supports a plug-and-play model for interoperability based on a SOA platform with a solid reference architecture. The path to get to a true interoperability model requires a multi-year phased evolutio
includes collaboration

Contact us

https://www.logicahealth.org/solutions/fhir-sandbox/

FHIR Sandbox – Logica

logicahealth.org/solutions/fhir-sandbox/

logica information at the speed of life

ABOUT SOLUTIONS MEMBERSHIP NEWS MEMBERS ONLY MEMBERSHIP RATES

Bob Milius|Logout

Solutions » FHIR Sandbox

By: preston.lee / On: 2019-04-04

The FHIR Sandbox is a free service provided by Logica Health for the FHIR community to develop SMART-on-FHIR and other FHIR-backed applications. Web-based GUIs, an EHR simulator, and full OAuth support provide a easy-to-use environment for developers of all skill levels.

Launch The Logica Sandbox Now!

The Logica Sandbox is also available for download to run locally!

Logica Sandbox Community Edition!

Bob Milius|Logout

Type Search Term ...

RECENT POSTS

- COVID-19 Interoperability Project
- Logica Response to OSHERA Shutdown
- HSPC is now Logica!
- FHIR Sandbox Wins Roundtable Award
- 4 Initiatives Advancing Healthcare Interoperability in 2017
- HL7, HSPC Partner to Initiate Interoperability FHIR Projects
- HSPC Launches Data-Standard Integration Initiative to A Healthcare Interoperability

Contact us

https://sandbox.logicahealth.org

Logica Sandbox Manager

sandbox.logicahealth.org/dashboard

logica | Sandbox

THE HEALTHCARE INNOVATION ECOSYSTEM

My Sandboxes

Last Used

NEW SANDBOX

Terms of Use & Privacy Statement

Logica Platform Terms of Use

Last Modified: 04/05/2020

Acceptance of the Terms of Use

These terms of use ("**Terms of Use**") entered into between You and Logica, Inc. ("**Logica**", "**we**" or "**us**"), govern your access to and use of our software and application development platforms, including http://www.developers.logicahealth.org/ and https://sandbox.logicahealth.org (collectively, the "**Platforms**").

Please read the Terms of Use carefully before you start to use the Platforms. **By using the Platforms or by clicking to accept or agree to the Terms of Use below, you accept and agree to be bound and abide by these Terms of Use and our Privacy Policy, found BELOW, incorporated herein by reference.** If you do not want to agree to these Terms of Use or the Privacy Policy, you must not access or use the Platforms.

Also, the Platforms are offered and available to users who are 18 years of age or older and reside in the United States or any of its territories or possessions. If you are not 18 years old or older, or do not reside in the United States or any of its territories or possessions, do not use the Platforms.

Changes to the Terms of Use

We may revise and update these Terms of Use from time to time in our sole discretion. All changes are effective immediately when we post them, and apply to all access to and use of the Platforms thereafter. Your continued use of the Platforms following the posting of revised Terms of Use means that you accept and agree to the changes. We encourage you to check these Terms of Use often for updates.

Accessing the Website and Account Security

Access to the Platforms is provided to you solely for the purpose of developing healthcare software applications. We reserve the right to withdraw or amend the Platforms, and any service or material we provide through the Platforms, in our sole discretion at any time without notice. We will not be liable if for any reason all or any part of the Platforms is unavailable at any time or for any period.

To access the Platforms or some of the resources it offers, you may be asked to provide certain registration details or other information. It is a condition of your use of the Platforms that all the information you provide on the Platforms is correct, current and complete. You agree that all information you provide to register with the Platforms or otherwise, including but not limited to through the use of any interactive features on the Platforms, is governed by our Privacy Policy (**See Below**), and you consent to all actions we take with respect to your information consistent with our Privacy Policy.

If you choose, or are provided with, a user name, password or any other piece of information as part of our security procedures, you must treat such information as confidential, and you must not disclose it to

ACCEPT

LOGICA OFFICIAL SITE

Logica Developer's Sandbox

Logica Confluence

RESOURCES

Logica Developer Resources

SMART on FHIR Documenation

Logica BitBucket

HL7 FHIR

SUPPORT

Logica Developers Forum

Logica JIRA

Logica Developers: Powering the Healthcare Innovation Ecosystem

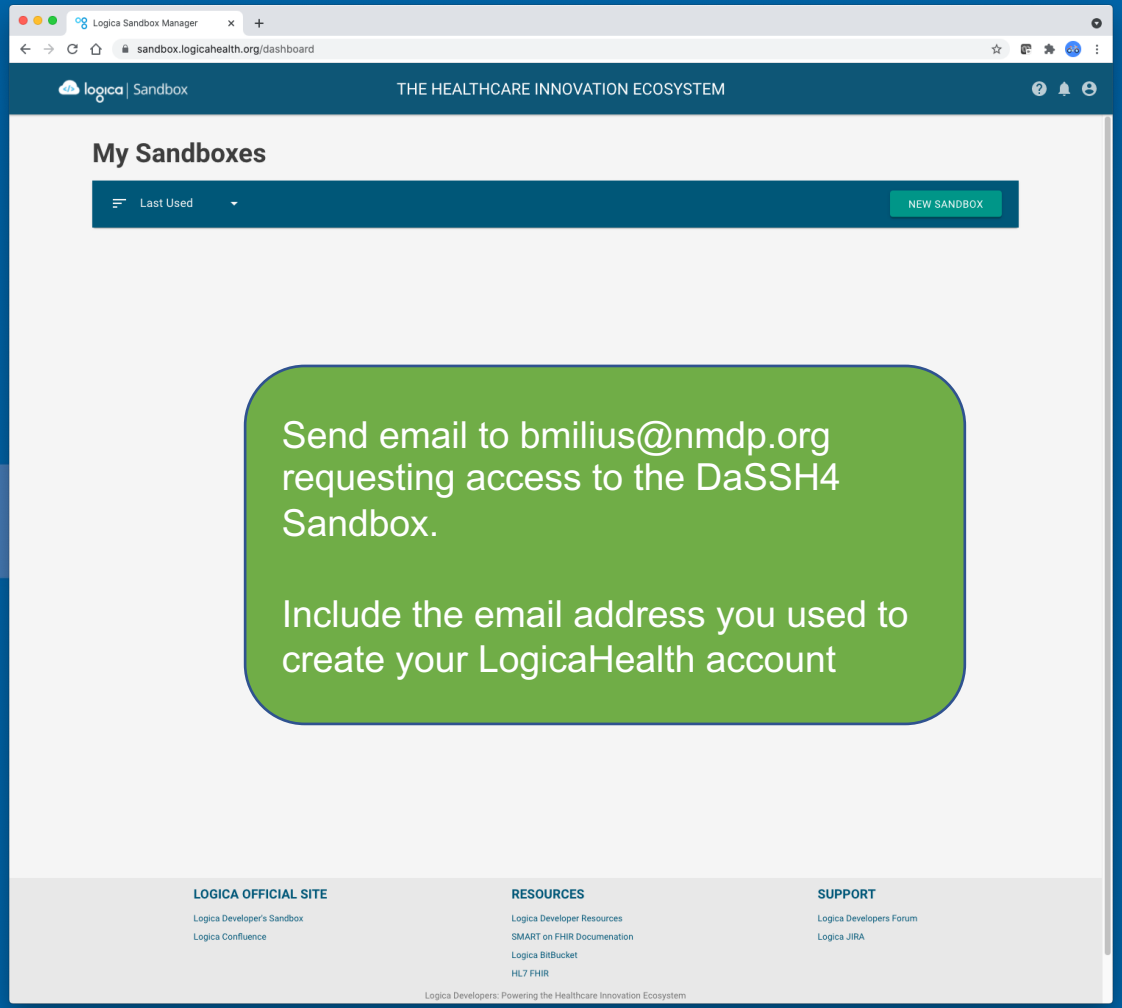

Send email to bmilius@nmdp.org requesting access to the DaSSH4 Sandbox.

Include the email address you used to create your LogicaHealth account

Logica Sandbox Invitation Inbox ×

noreply@logicahealth.org
to me

2:29 PM (8 minutes ago)

logica | Sandbox

Robert Milius has invited you to join **DaSSH4 FHIR STU3** Logica Sandbox.

Accept Invitation

Logica Sandbox Manager

sandbox.logicahealth.org/dashboard

logica | Sandbox

THE HEALTHCARE INNOVATION ECOSYSTEM

My Sandboxes

Last Used

NEW SANDBOX

Sandbox Invitation

Robert Milius / bmilius@nmdp.org has invited you to join DaSSH4 FHIR STU3 Logica Sandbox.

ACCEPT REJECT

LOGICA OFFICIAL SITE

Logica Developer's Sandbox

Logica Confluence

RESOURCES

Logica Developer Resources

SMART on FHIR Documenation

Logica BitBucket

HL7 FHIR

SUPPORT

Logica Developers Forum

Logica JIRA

Logica Developers: Powering the Healthcare Innovation Ecosystem

Logica Sandbox Manager

sandbox.logicahealth.org/dashboard

logica | Sandbox

THE HEALTHCARE INNOVATION ECOSYSTEM

My Sandboxes

Last Used

NEW SANDBOX

STU3

DaSSH4 FHIR STU3

Explore the CIBMTR Reporting App!

LOGICA OFFICIAL SITE

Logica Developer's Sandbox

Logica Confluence

RESOURCES

Logica Developer Resources

SMART on FHIR Documenation

Logica BitBucket

HL7 FHIR

SUPPORT

Logica Developers Forum

Logica JIRA

Logica Developers: Powering the Healthcare Innovation Ecosystem

CIBMTR-REPORTING\Home - | Logica Sandbox Manager

sandbox.logicahealth.org/DaSSH4FHIRSTU3/apps

logica | Sandbox

DASSH4 FHIR STU3

- EHR Simulator
- Apps
- CDS Hooks
- Launch Scenarios
- Patients
- Personas
- Practitioners
- Profiles
- Data Manager
- Tools
- Settings

Registered Apps

CIBMTR-REPORTING\Home - | Logica Sandbox Manager

sandbox.logicahealth.org/DaSSH4FHIRSTU3/apps

logica | Sandbox

DASSH4 FHIR STU3

- EHR Simulator
- Apps
- CDS Hooks
- Launch Scenarios
- Patients
- Personas
- Practitioners
- Profiles
- Data Manager
- Tools
- Settings

Registered Apps

Bilirubin Risk Chart

CDS Hooks Sandbox

CIBMTR

CIBMTR Reporting Dev (ST...

CIBMTR

CIBMTR Reporting EXTTEST (STU3)

Reporting outcomes data to CIBMTR from the EHR

LAUNCH SETTINGS

CIBMTR

CIBMTR Reporting QA (ST...

My Web App

CIBMTR-REPORTING\Home - | Logica Sandbox Manager

sandbox.logicahealth.org/DaSSH4FHIRSTU3/apps

logica | Sandbox

DASSH4 FHIR STU3

- EHR Simulator
- Apps
- CDS Hooks
- Launch Scenarios
- Patients
- Personas
- Practitioners
- Profiles
- Data Manager
- Tools
- Settings

Registered Apps

CIBMTR

CIBMTR Reporting Dev (ST...

My Web App

Personas

LAUNCH WITH DEFAULT PERSONA

Type

Name	FHIR Resource	Login Info
Jane Smith	Practitioner/1	U: example@DaSSH4FHIRSTU3 P: example

Logica Sandbox Manager

sandbox.logicahealth.org/DaSSH4FHIRSTU3/apps

logica | Sandbox

DASSH4 FHIR STU3

- EHR Simulator
- Apps
- CDS Hooks
- Launch Scenarios
- Patients
- Personas
- Practitioners
- Profiles
- Data Manager
- Tools
- Settings

Registered Apps

CIBMTR

CIBMTR Reporting (STU3)

My Web App

PATIENTS

LAUNCH WITHOUT A PATIENT

Gender

Age

Search by name

	Name	Identifier	Age	DOB
♀	Diaz, Kelly Dash	970	63y 0m 15d	19 Jul 1958
♂	Espinoza, Alex Dash	1294	25y 3m 22d	11 Apr 1996
♂	Glass, Jermaine Dash	628	63y 8m 9d	24 Nov 1957
♀	Jones, Amanda Dash	294	12y 11m 16d	18 Aug 2008
♂	Lawrence, Bryan Dash	1127	17y 5m 19d	13 Feb 2004
♀	Martin, Erica Dash	455	18y 11m 30d	04 Aug 2002
♀	Parker, Diana Dash	150	51y 2m 20d	14 May 1970
♂	Ramsey, Kyle Dash	1615	53y 2m 10d	24 May 1968
♀	White, Christina Dash	1475	54y 0m 25d	09 Jul 1967
♂	Wood, Brian Dash	792	47y 2m 25d	09 May 1974

Logica Sandbox Manager | OpenID Connect Server - App

auth.logicahealth.org/authorize?scope=launch&response_type=code&redirect_uri=https%3A%2F%2Fcibmtr-fhir-ehr-dev.nmdp.org&client_id=707b4649-f7e7-4c41-8331-ba...

OpenID Connect Server | Home | About | Statistics | Contact | example@DaSSH4FHIRSTU3

Approval Required for *cra r3 test*

You will be redirected to the following page if you click Approve:
`https://cibmtr-fhir-ehr-dev.nmdp.org`

Access to:

- [x] Launch context info

Remember this decision:

- ( ) remember this decision until I revoke it
- ( ) remember this decision for one hour
- (•) prompt me again next time

Do you authorize "cra r3 test"?

Authorize | Deny

© 2017 The MIT Internet Trust Consortium.

Web-Cibmtr-Reporting

cibmtr-fhir-ehr-dev.nmdp.org/main

BE THE MATCH®

Sign in to access your suite of Be The Match applications.

Username

l1fhirtesterdassh01

Password

Forgot password?

••••••••••••

By accessing this system, you agree to the National Marrow Donor Program Terms of Use and Privacy Policy

Sign In

EEO/Affirmative Action Employer

National Marrow Donor Program -- Entrusted to operate the C.W. Bill Young Cell Transplantation Program, including Be The Match Registry ®

Copyright © 1996 - 2021 National Marrow Donor Program. All Rights Reserved.

LogicaHealth Live Demo

Thank you!

Logica Sandbox Manager | Web-Cibmtr-Reporting

cibmtr-fhir-ehr-externaltest.nmdp.org/main

CIBMTR
CENTER FOR INTERNATIONAL BLOOD & MARROW TRANSPLANT RESEARCH

CIBMTR Reporting version 0.3.6

CIBMTR Logout

Welcome 11 fhirtesterdassh01 from Test RC 2

Kelly Dash Diaz

Associate Crid

- Date of birth: 1958-07-19
- Gender: female
- Identifiers:
  - :d0378e06737b4092bfceb2933601365e

Logica Sandbox Manager | Web-Cibmtr-Reporting

cibmtr-fhir-ehr-externaltest.nmdp.org/main

CIBMTR

CENTER FOR INTERNATIONAL BLOOD & MARROW TRANSPLANT RESEARCH

CIBMTR Reporting version 0.3.6

CIBMTR Logout

Welcome 11 fhirtesterdassh01 from Test RC 2

Kelly Dash Diaz

CIBMTR Research ID (CRID) : **4597904**

- Date of birth: 1958-07-19
- Gender: female
- Identifiers:
  - :d0378e06737b4092bfceb2933601365e

Proceed

Logica Sandbox Manager | Web-Cibmtr-Reporting

cibmtr-fhir-ehr-externaltest.nmdp.org/patientdetail

CIBMTR
CENTER FOR INTERNATIONAL BLOOD & MARROW TRANSPLANT RESEARCH

CIBMTR Reporting version 0.3.6

CIBMTR Logout

Kelly Dash Diaz

CIBMTR Research ID (CRID) : **4597904**

Collection

- Priority Labs 177
- Labs 177

Please select a collection to begin submission process

Logica Sandbox Manager | Web-Cibmtr-Reporting

cibmtr-fhir-ehr-externaltest.nmdp.org/patientdetail/priority

CIBMTR CENTER FOR INTERNATIONAL BLOOD & MARROW TRANSPLANT RESEARCH

CIBMTR Reporting version 0.3.6

CIBMTR Logout

Kelly Dash Diaz

CIBMTR Research ID (CRID) : **4597904**

Collection

- **Priority Labs** 177
- Labs 177

Date Retrieved : 2021-08-03 12:32

Name	Value	Effective Time	
Erythrocytes [#/volume] in Blood by Manual count	0.1 billion per microliter	2021-03-12 02:27:23-0600	☑
Hemoglobin [Mass/volume] in Mixed venous blood	14.8 gram per deciliter	2020-11-04 10:45:00-0600	☐
Promyelocytes [#/volume] in Blood	0.7 Thousands Per MicroLiter	2020-10-25 08:09:55-0500	☐
Ferritin [Mass/volume] in Blood	167 nanogram per millliiter	2020-10-10 08:53:49-0500	☐

Submit to CIBMTR

Logica Sandbox Manager | Web-Cibmtr-Reporting

cibmtr-fhir-ehr-externaltest.nmdp.org/patientdetail/priority

CIBMTR
CENTER FOR INTERNATIONAL BLOOD & MARROW TRANSPLANT RESEARCH

CIBMTR Reporting version 0.3.6

CIBMTR Logout

Kelly Dash Diaz

CIBMTR Research ID (CRID) : **4597904**

Collection

- **Priority Labs** 177
- Labs 177

1 Observation(s) submitted Successfully.

Date Retrieved : 2021-08-03 12:32

Name	Value	Effective Time	
Erythrocytes [#/volume] in Blood by Manual count	0.1 billion per microliter	2021-03-12 02:27:23-0600	☑
Hemoglobin [Mass/volume] in Mixed venous blood	**14.8 gram per deciliter**	**2020-11-04 10:45:00-0600**	☐
Promyelocytes [#/volume] in Blood	**0.7 Thousands Per MicroLiter**	**2020-10-25 08:09:55-0500**	☐
Ferritin [Mass/volume] in Blood	**167 nanogram per millliiter**	**2020-10-10 08:53:49-0500**	☐

Submit to CIBMTR