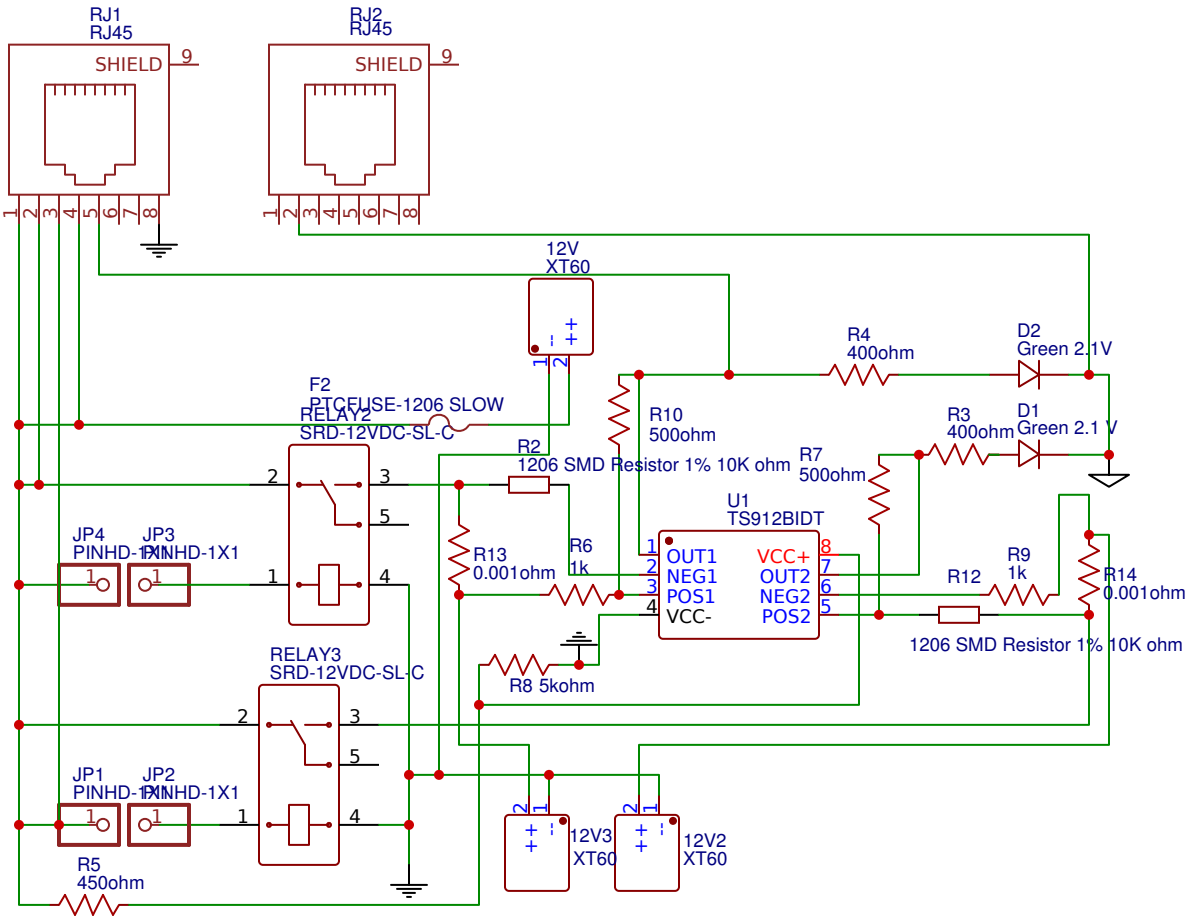

TITLE: Current Sensing Circuit	REV: 1.0
Date: 2018-11-09	Sheet: 1/1
EASYEDA V5.8.20	Drawn By: Nicholas Morin