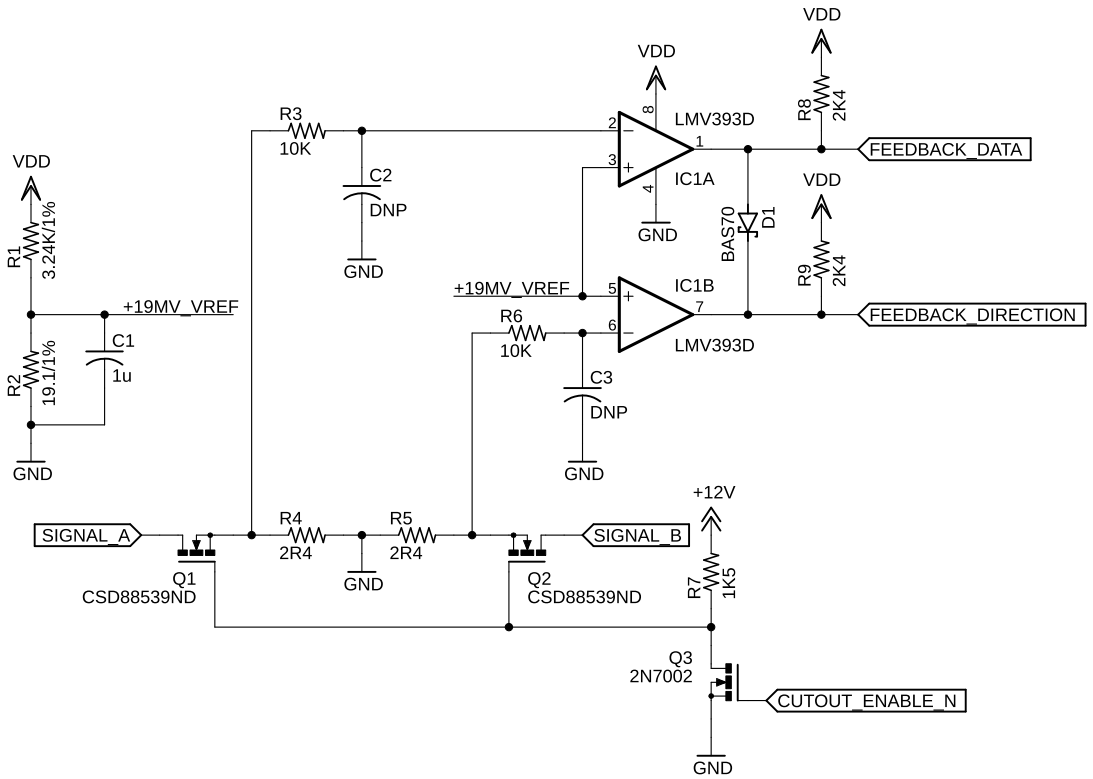

TITLE: 9.3.2_detector_booster	
Document Number:	REV:
Date: 8/25/2020 10:15 PM	Sheet: 1/1