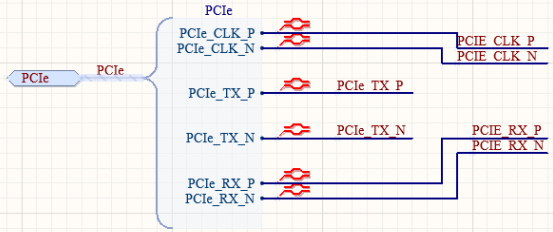

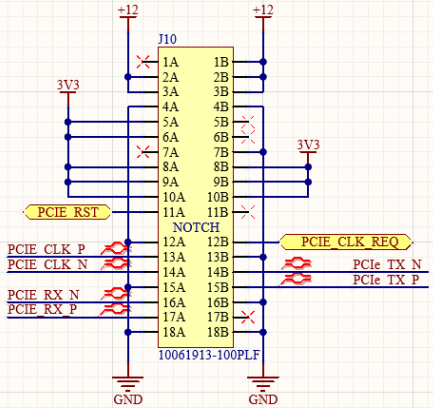

Title	*Scuba Doo PCIe to USB Bridge*		*CWRUbotix* *10900 Euclid Avenue* *Cleveland, OH 44106* *USA*
Size: B	Number:=documentnumber	Revision:=revision	
Date: 4/11/2022		Sheet 4 of 6	