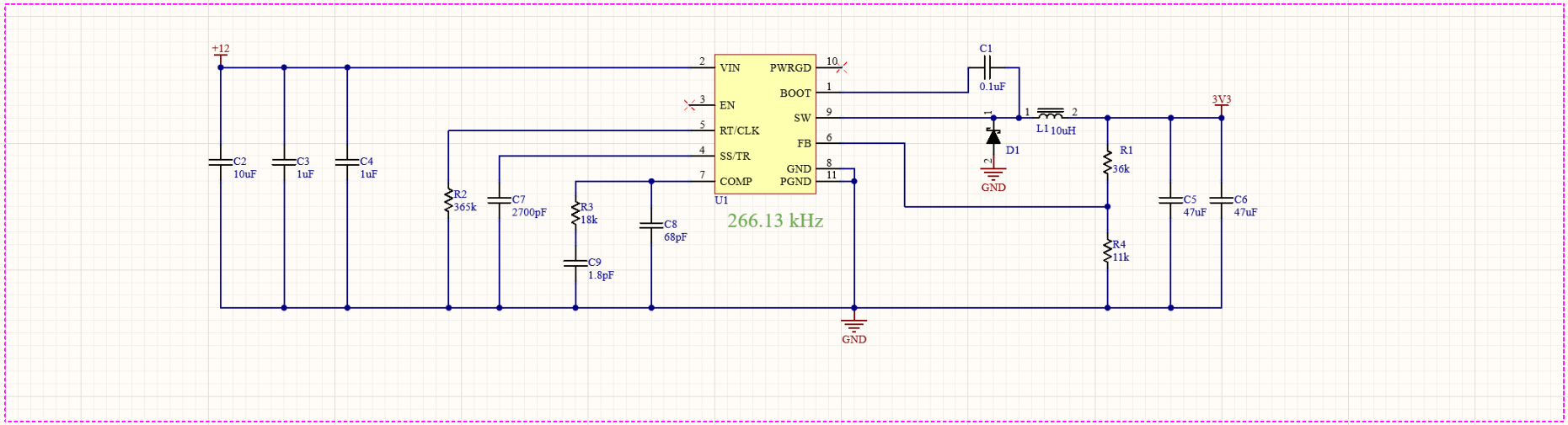

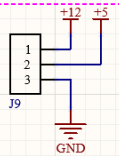

Power Input from MMPSU

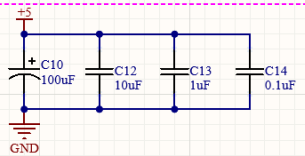

5 V Rail Bypassing

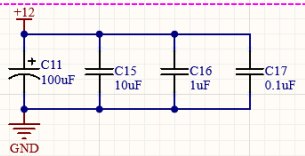

12 V Rail Bypassing

Title	*Scuba Doo Power Input*		*CWRUbotix* *10900 Euclid Avenue* *Cleveland, OH 44106* *USA*
Size: B	Number: =documentnumber	Revision: =revision	
Date: 4/11/2022		Sheet 1 of 6	

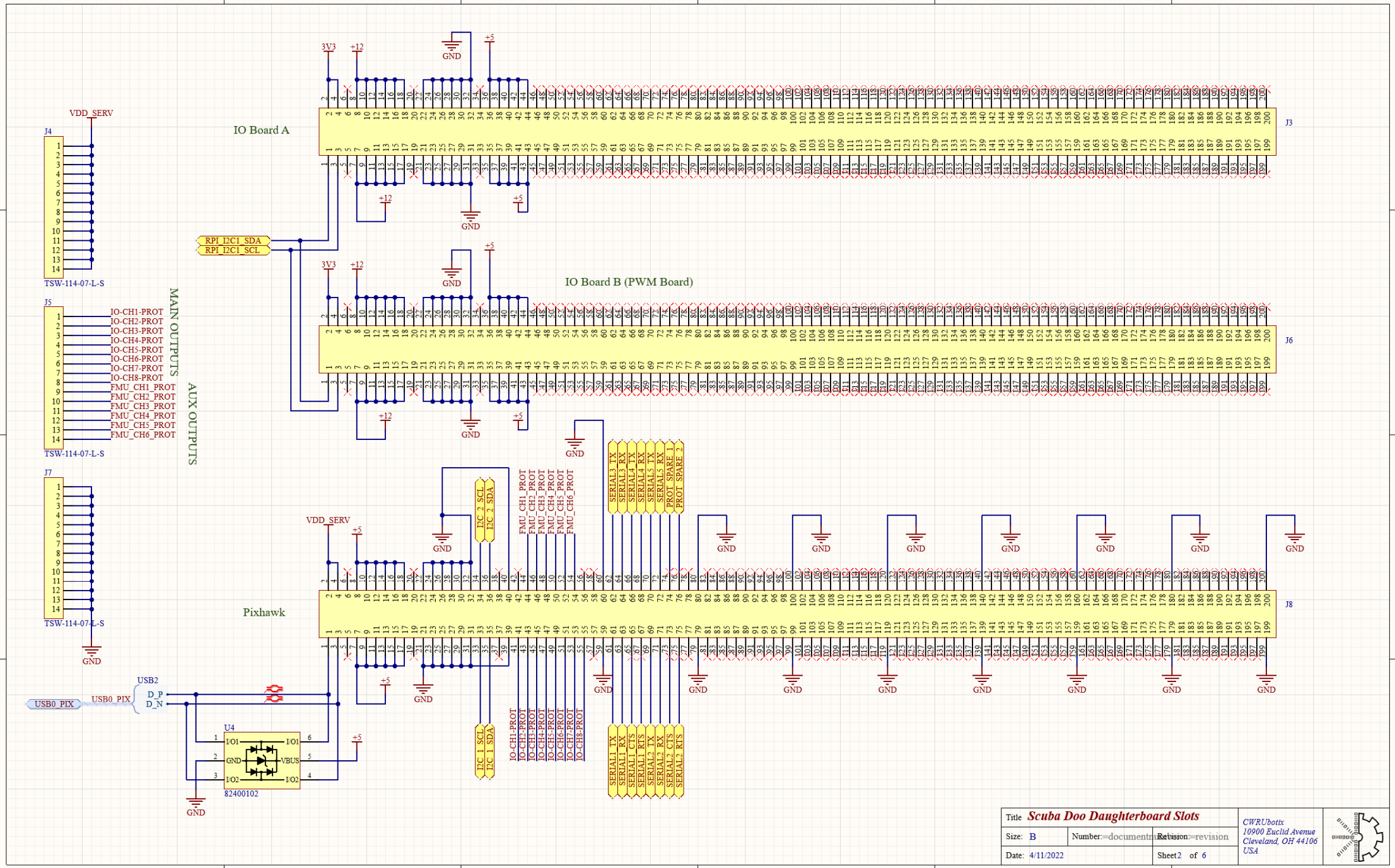
IO Board A
IO Board B (PWM Board)
Pixhawk
J3
J4
J5
J6
J7
J8
TSW-114-07-L-S
MAIN OUTPUTS
AUX OUTPUTS
IO-CH1-PROT
IO-CH2-PROT
IO-CH3-PROT
IO-CH4-PROT
IO-CH5-PROT
IO-CH6-PROT
IO-CH7-PROT
IO-CH8-PROT
FMU_CH1_PROT
FMU_CH2_PROT
FMU_CH3_PROT
FMU_CH4_PROT
FMU_CH5_PROT
FMU_CH6_PROT
RPI_I2C1_SDA
RPI_I2C1_SCL
VDD_SERV
3V3
+12
+5
GND
I2C_2_SCL
I2C_2_SDA
I2C_1_SCL
I2C_1_SDA
SERIAL3_TX
SERIAL3_RX
SERIAL4_TX
SERIAL4_RX
SERIAL5_TX
SERIAL5_RX
PROT_SPARE_1
PROT_SPARE_2
SERIAL1_TX
SERIAL1_RX
SERIAL1_CTS
SERIAL1_RTS
SERIAL2_TX
SERIAL2_RX
SERIAL2_CTS
SERIAL2_RTS
USB0_PIX
USB2
D_P
D_N
U4
I/O1
GND
I/O2
VBUS
82400102
Title Scuba Doo Daughterboard Slots
Size: B
Number: =documentnumber
Revision: =revision
Date: 4/11/2022
Sheet 2 of 6
CWRUbotix
10900 Euclid Avenue
Cleveland, OH 44106
USA

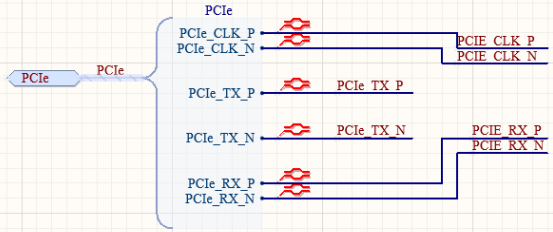

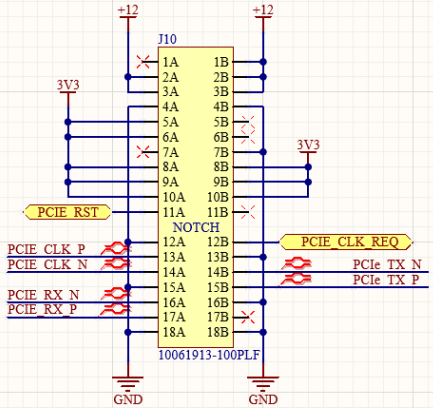

Title	*Scuba Doo PCIe to USB Bridge*		*CWRUbotix* *10900 Euclid Avenue* *Cleveland, OH 44106* *USA*
Size: B	Number:=documentnumber	Revision:=revision	
Date: 4/11/2022		Sheet 4 of 6	

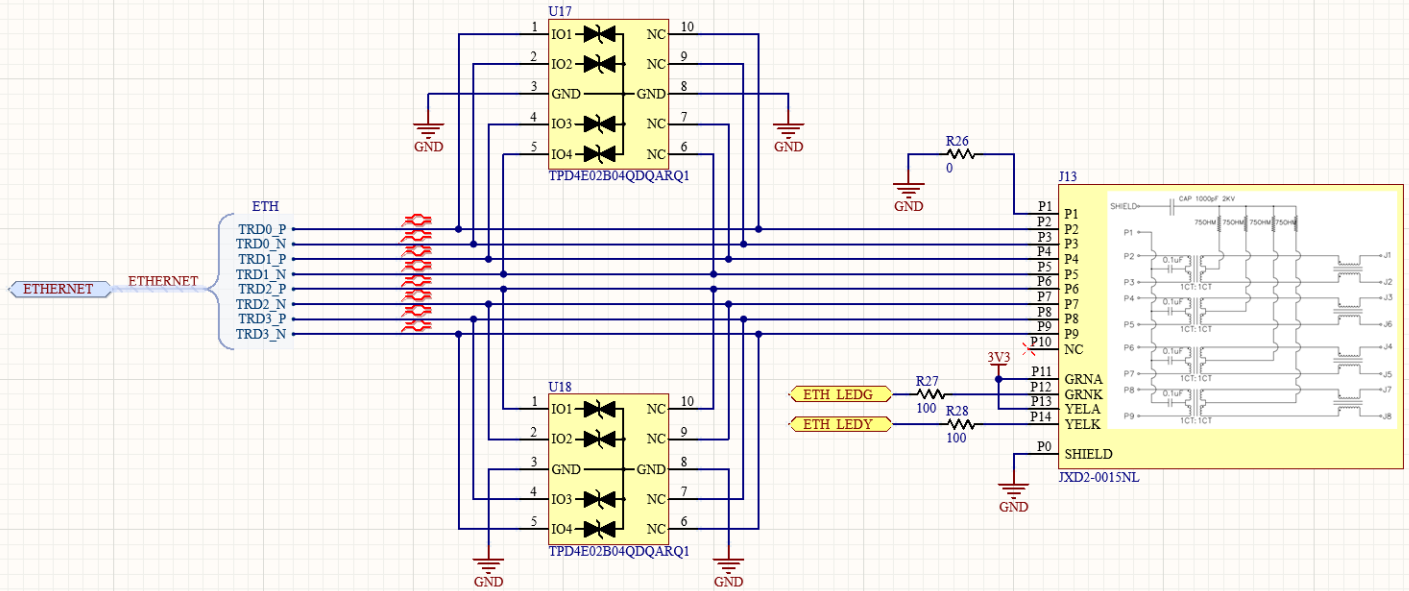

Title	*Scuba Doo Ethernet*		*CWRUbottx* *10900 Euclid Avenue* *Cleveland, OH 44106* *USA*
Size: B	Number: =documentnumber	Revision: =revision	
Date: 4/13/2022		Sheet 4 of 6	

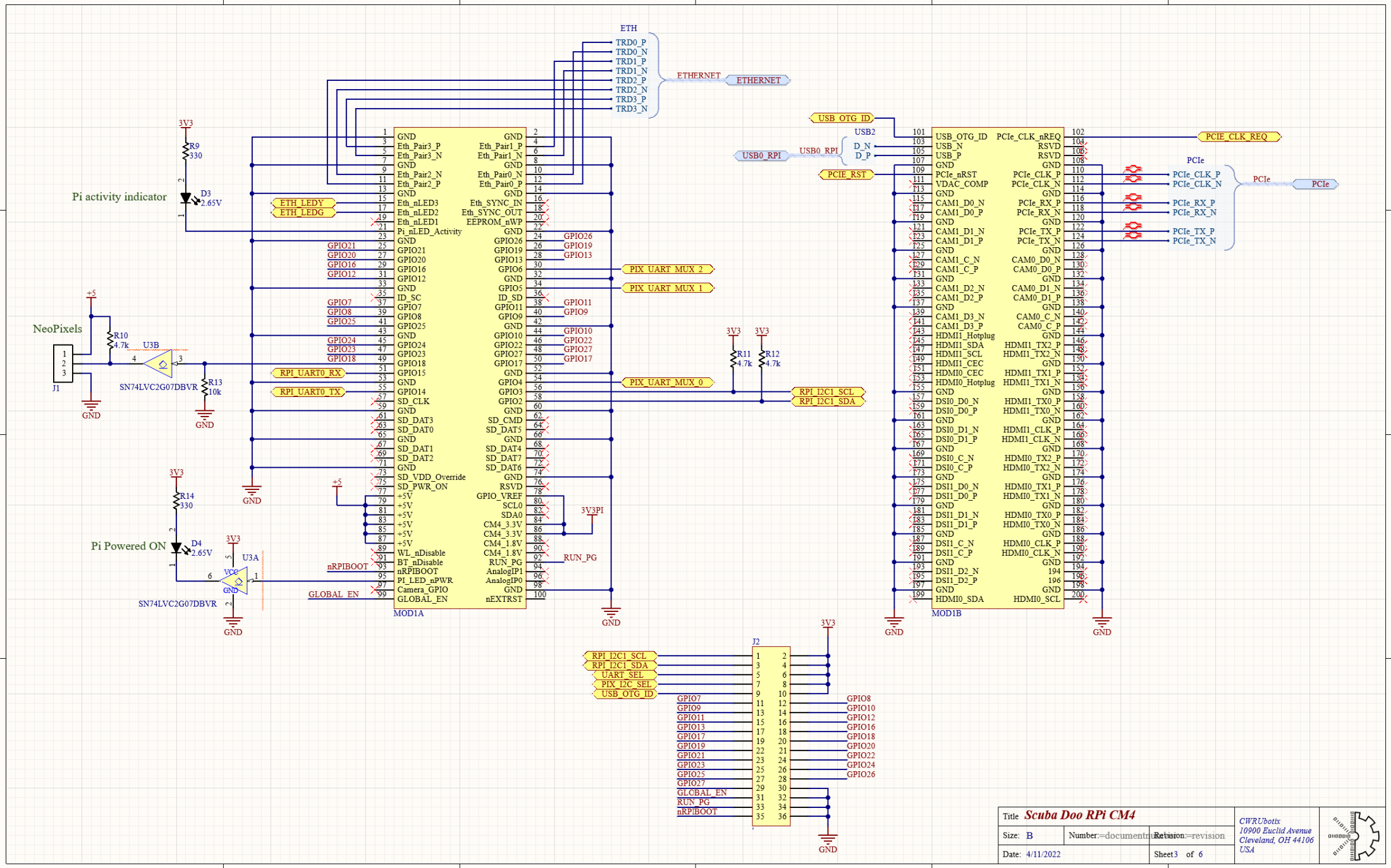
ETH
TRD0_P
TRD0_N
TRD1_P
TRD1_N
TRD2_P
TRD2_N
TRD3_P
TRD3_N
ETHERNET
ETHERNET
3V3
R9
330
D3
2.65V
Pi activity indicator
ETH_LEDY
ETH_LEDG
GPIO21
GPIO20
GPIO16
GPIO12
GPIO7
GPIO8
GPIO25
GPIO24
GPIO23
GPIO18
RPI_UART0_RX
RPI_UART0_TX
+5
NeoPixels
R10
4.7k
U3B
J1
SN74LVC2G07DBVR
R13
10k
GND
3V3
R14
330
D4
2.65V
Pi Powered ON
U3A
VCC
GND
SN74LVC2G07DBVR
nRPIBOOT
GLOBAL_EN
MOD1A
GND
Eth_Pair3_P
Eth_Pair3_N
Eth_Pair2_N
Eth_Pair2_P
Eth_nLED3
Eth_nLED2
Eth_nLED1
Pi_nLED_Activity
ID_SC
GPIO14
SD_CLK
SD_DAT3
SD_DAT0
SD_DAT1
SD_DAT2
SD_VDD_Override
SD_PWR_ON
WL_nDisable
BT_nDisable
nRPIBOOT
PI_LED_nPWR
Camera_GPIO
GLOBAL_EN
Eth_Pair1_P
Eth_Pair1_N
Eth_Pair0_N
Eth_Pair0_P
Eth_SYNC_IN
Eth_SYNC_OUT
EEPROM_nWP
GPIO26
GPIO19
GPIO13
GPIO6
GPIO5
ID_SD
GPIO11
GPIO9
GPIO10
GPIO22
GPIO27
GPIO17
GPIO4
GPIO3
GPIO2
SD_CMD
SD_DAT5
SD_DAT4
SD_DAT7
SD_DAT6
RSVD
GPIO_VREF
SCL0
SDA0
CM4_3.3V
CM4_3.3V
CM4_1.8V
CM4_1.8V
RUN_PG
AnalogIP1
AnalogIP0
nEXTRST
PIX_UART_MUX_2
PIX_UART_MUX_1
PIX_UART_MUX_0
RPI_I2C1_SCL
RPI_I2C1_SDA
3V3PI
RUN_PG
USB_OTG_ID
USB2
USB0_RPI
D_N
D_P
PCIE_RST
MOD1B
USB_OTG_ID
USB_N
USB_P
PCIe_nRST
VDAC_COMP
CAM1_D0_N
CAM1_D0_P
CAM1_D1_N
CAM1_D1_P
CAM1_C_N
CAM1_C_P
CAM1_D2_N
CAM1_D2_P
CAM1_D3_N
CAM1_D3_P
HDMI1_Hotplug
HDMI1_SDA
HDMI1_SCL
HDMI1_CEC
HDMI0_CEC
HDMI0_Hotplug
DSI0_D0_N
DSI0_D0_P
DSI0_D1_N
DSI0_D1_P
DSI0_C_N
DSI0_C_P
DSI1_D0_N
DSI1_D0_P
DSI1_D1_N
DSI1_D1_P
DSI1_C_N
DSI1_C_P
DSI1_D2_N
DSI1_D2_P
HDMI0_SDA
PCIe_CLK_nREQ
RSVD
PCIe_CLK_P
PCIe_CLK_N
PCIe_RX_P
PCIe_RX_N
PCIe_TX_P
PCIe_TX_N
CAM0_D0_N
CAM0_D0_P
CAM0_D1_N
CAM0_D1_P
CAM0_C_N
CAM0_C_P
HDMI1_TX2_P
HDMI1_TX2_N
HDMI1_TX1_P
HDMI1_TX1_N
HDMI1_TX0_P
HDMI1_TX0_N
HDMI1_CLK_P
HDMI1_CLK_N
HDMI0_TX2_P
HDMI0_TX2_N
HDMI0_TX1_P
HDMI0_TX1_N
HDMI0_TX0_P
HDMI0_TX0_N
HDMI0_CLK_P
HDMI0_CLK_N
HDMI0_SCL
PCIE_CLK_REQ
PCIe
PCIe
R11
4.7k
R12
4.7k
J2
RPI_I2C1_SCL
RPI_I2C1_SDA
UART_SEL
PIX_I2C_SEL
USB_OTG_ID
GPIO7
GPIO9
GPIO11
GPIO13
GPIO17
GPIO19
GPIO21
GPIO23
GPIO25
GPIO27
GLOBAL_EN
RUN_PG
nRPIBOOT
GPIO8
GPIO10
GPIO12
GPIO16
GPIO18
GPIO20
GPIO22
GPIO24
GPIO26
Title Scuba Doo RPi CM4
Size: B
Number:=documentnumber
Revision:=revision
Date: 4/11/2022
Sheet3 of 6
CWRUbotix
10900 Euclid Avenue
Cleveland, OH 44106
USA

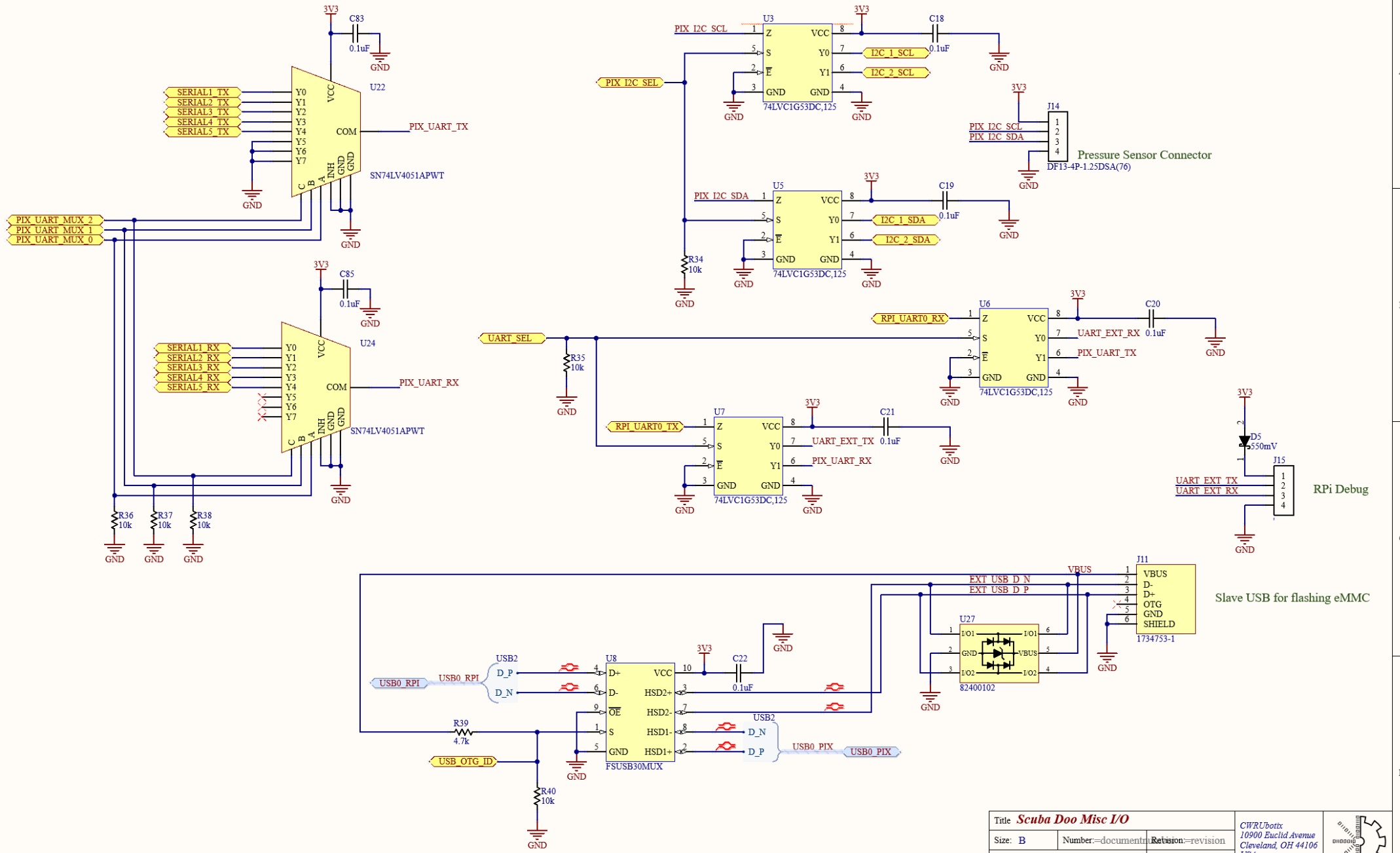
U22
SN74LV4051APWT
C83
0.1uF
SERIAL1_TX
SERIAL2_TX
SERIAL3_TX
SERIAL4_TX
SERIAL5_TX
PIX_UART_TX
PIX_UART_MUX_2
PIX_UART_MUX_1
PIX_UART_MUX_0
U24
SN74LV4051APWT
C85
0.1uF
SERIAL1_RX
SERIAL2_RX
SERIAL3_RX
SERIAL4_RX
SERIAL5_RX
PIX_UART_RX
R36 10k
R37 10k
R38 10k
U3
74LVC1G53DC,125
C18
0.1uF
PIX_I2C_SCL
PIX_I2C_SEL
I2C_1_SCL
I2C_2_SCL
U5
74LVC1G53DC,125
C19
0.1uF
PIX_I2C_SDA
I2C_1_SDA
I2C_2_SDA
R34 10k
J14
DF13-4P-1.25DSA(76)
Pressure Sensor Connector
U6
74LVC1G53DC,125
C20
0.1uF
UART_SEL
RPI_UART0_RX
UART_EXT_RX
PIX_UART_TX
R35 10k
U7
74LVC1G53DC,125
C21
0.1uF
RPI_UART0_TX
UART_EXT_TX
PIX_UART_RX
D5
550mV
J15
UART_EXT_TX
UART_EXT_RX
RPi Debug
J11
1734753-1
VBUS
D-
D+
OTG
GND
SHIELD
EXT_USB_D_N
EXT_USB_D_P
Slave USB for flashing eMMC
U27
82400102
U8
FSUSB30MUX
C22
0.1uF
USB0_RPI
USB2
D_P
D_N
R39 4.7k
USB_OTG_ID
R40 10k
USB0_PIX
Title Scuba Doo Misc I/O
Size: B
Number:=documentnumber
Revision:=revision
Date: 4/11/2022
Sheet 6 of 6
CWRUbotix
10900 Euclid Avenue
Cleveland, OH 44106
USA