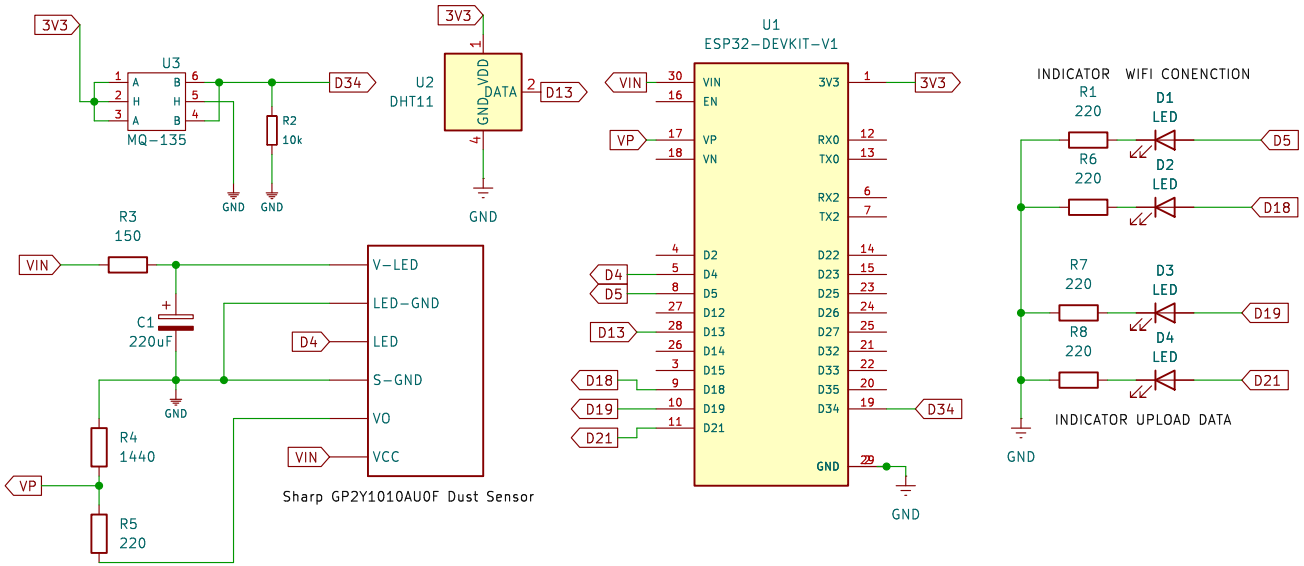

Sheet: /
File: SIC5_Schematics_34.kicad_sch

Title: Schematics Air Quality Sensors Using MQ135, DHT22, SHARP GP2Y1010AU0F

Size: A5	Date:	Rev:
KiCad E.D.A. 8.0.3		Id: 1/1