GameGuy ESP8266 PCB

USB, UART, and Power

Dual Regulator – 3V3 and 5V

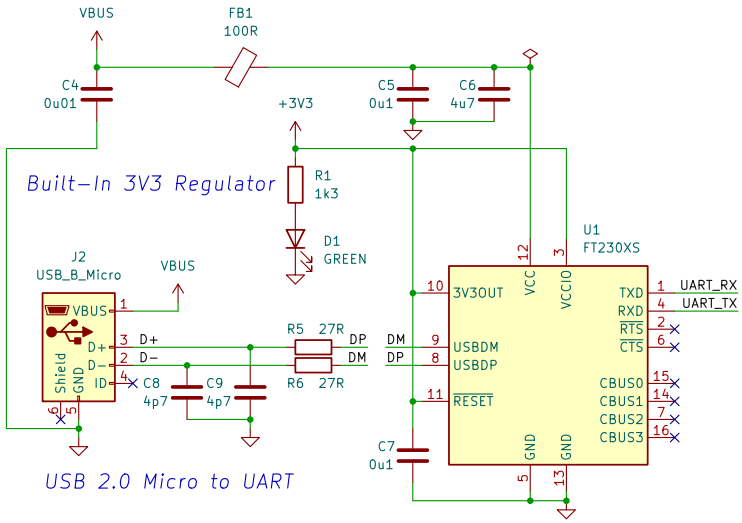

ESP8266 Microcontroller

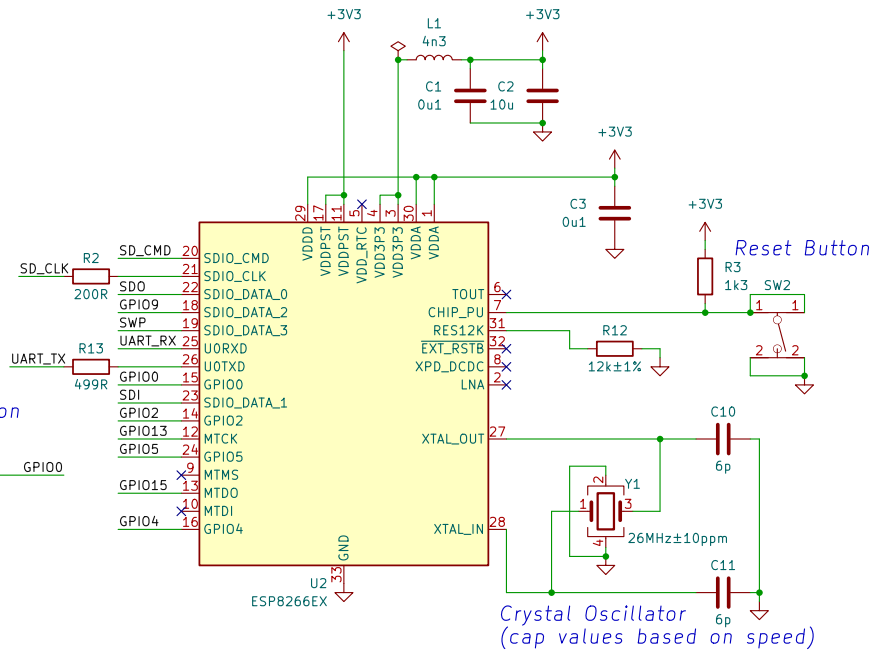

Flash Button

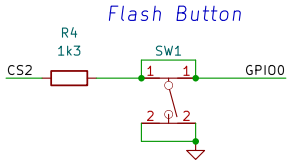

Speaker

Molex 53047-0210
PWM for square wave

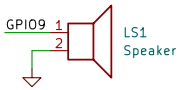

Display Connector

Adafruit 3502 Display

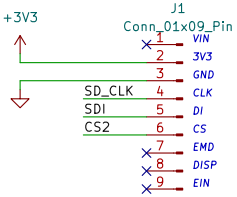

User Input

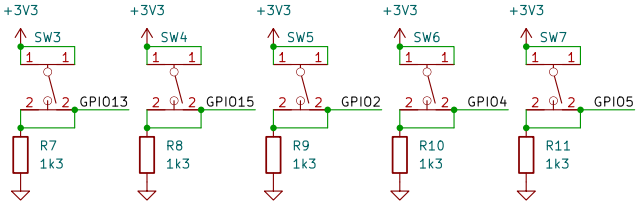

Flash Memory

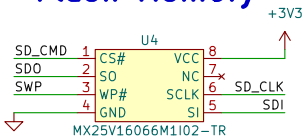

Untested and Unrevised
Isaac Longo
Sheet: /
File: gamerboy.kicad_sch

Title: GamerGuy

Size: A4	Date: 2024-06-24	**Rev: 0.1**
KiCad E.D.A. 8.0.6		Id: 1/1