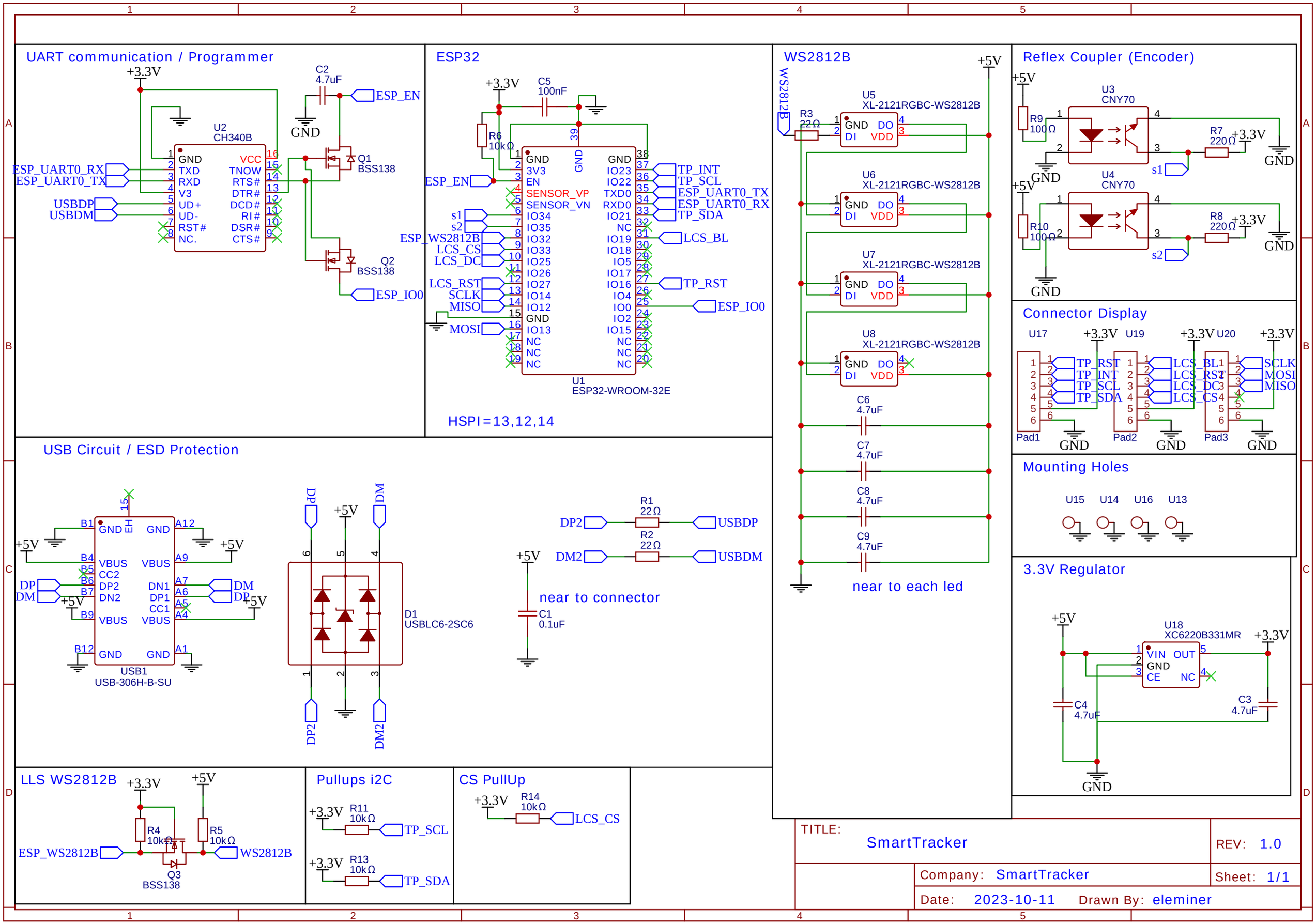
UART communication / Programmer
+3.3V
C2
4.7uF
ESP_EN
GND
U2
CH340B
ESP_UART0_RX
ESP_UART0_TX
USBDP
USBDM
GND
TXD
RXD
V3
UD+
UD-
RST#
NC.
VCC
TNOW
RTS#
DTR#
DCD#
RI#
DSR#
CTS#
Q1
BSS138
Q2
BSS138
ESP_IO0
ESP32
+3.3V
C5
100nF
R6
10kΩ
ESP_EN
s1
s2
ESP_WS2812B
LCS_CS
LCS_DC
LCS_RST
SCLK
MISO
MOSI
GND
3V3
EN
SENSOR_VP
SENSOR_VN
IO34
IO35
IO32
IO33
IO25
IO26
IO27
IO14
IO12
IO13
NC
IO23
IO22
TXD0
RXD0
IO21
IO19
IO18
IO5
IO17
IO16
IO4
IO0
IO2
IO15
TP_INT
TP_SCL
ESP_UART0_TX
ESP_UART0_RX
TP_SDA
LCS_BL
TP_RST
ESP_IO0
U1
ESP32-WROOM-32E
HSPI=13,12,14
WS2812B
+5V
WS2812B
R3
22Ω
U5
XL-2121RGBC-WS2812B
U6
XL-2121RGBC-WS2812B
U7
XL-2121RGBC-WS2812B
U8
XL-2121RGBC-WS2812B
GND
DO
DI
VDD
C6
4.7uF
C7
4.7uF
C8
4.7uF
C9
4.7uF
near to each led
Reflex Coupler (Encoder)
+5V
U3
CNY70
R9
100Ω
R7
220Ω
+3.3V
GND
s1
U4
CNY70
R10
100Ω
R8
220Ω
s2
Connector Display
U17
U19
U20
+3.3V
TP_RST
TP_INT
TP_SCL
TP_SDA
LCS_BL
LCS_RST
LCS_DC
LCS_CS
SCLK
MOSI
MISO
Pad1
Pad2
Pad3
Mounting Holes
U15
U14
U16
U13
3.3V Regulator
U18
XC6220B331MR
VIN
OUT
GND
CE
NC
C4
4.7uF
C3
4.7uF
USB Circuit / ESD Protection
GND
EH
VBUS
CC2
DP2
DN2
CC1
DN1
DP1
DP
DM
USB1
USB-306H-B-SU
D1
USBLC6-2SC6
DP2
DM2
R1
22Ω
R2
22Ω
USBDP
USBDM
near to connector
C1
0.1uF
LLS WS2812B
R4
10kΩ
R5
10kΩ
Q3
BSS138
Pullups i2C
R11
10kΩ
R13
10kΩ
CS PullUp
R14
10kΩ
LCS_CS
TITLE:
SmartTracker
REV: 1.0
Company: SmartTracker
Sheet: 1/1
Date: 2023-10-11
Drawn By: eleminer