July 19, 2023

Meet at **noon** tomorrow!

12pm-1pm : **Lecture**

1pm-2pm : **Studio**

Quizzes 1&2 : Friday!

Reflection 4 : Due Friday by midnight

Conceptual HW 4 : Due Sunday by midnight

Office Hours

Mondays Noon-2pm
Thursdays 2-3pm

	Monday	Tuesday	Wednesday	Thursday	Friday
Week 3	July 10 V2 CH 6	July 11 Homework 2 Lab W3 - Using	July 12 V2 CH 7	July 13 V2 CH 7 Studio : Gauss Law	July 14 V2 CH 7 Reflection
Week 4	July 17 V2 CH 8	July 18 Homework 3 Lab W4 - Electric Potential	July 19 V2 CH 8	July 20 V2 CH 9 Studio : V and C	July 21 Reflection Quiz 1&2: CH 5-7
Week 5	July 24 V2 CH 9	July 25 Homework 4 Lab W5 - Potential & Field	July 26 V2 CH 9	July 27 V2 CH 10 Studio : Ohm's Law	July 28 V2 CH 10 Reflection

Chapter 8

Capacitors

Capacitor Uses

§ —
Lecture 13

Circuit Protection

Protects circuits against spikes in current

Without Capacitor

With Capacitor

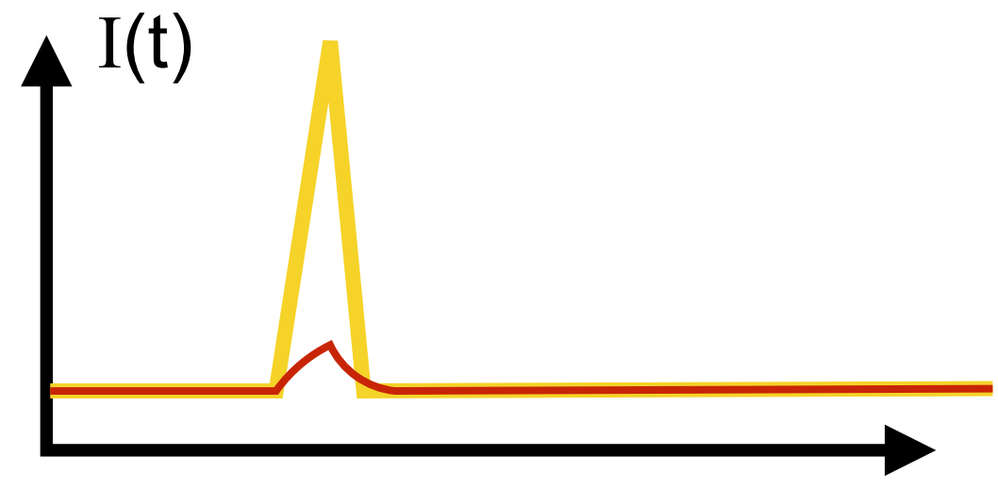

Absorbs extra unexpected charge

Protects circuits against drops in current

Without Capacitor

With Capacitor

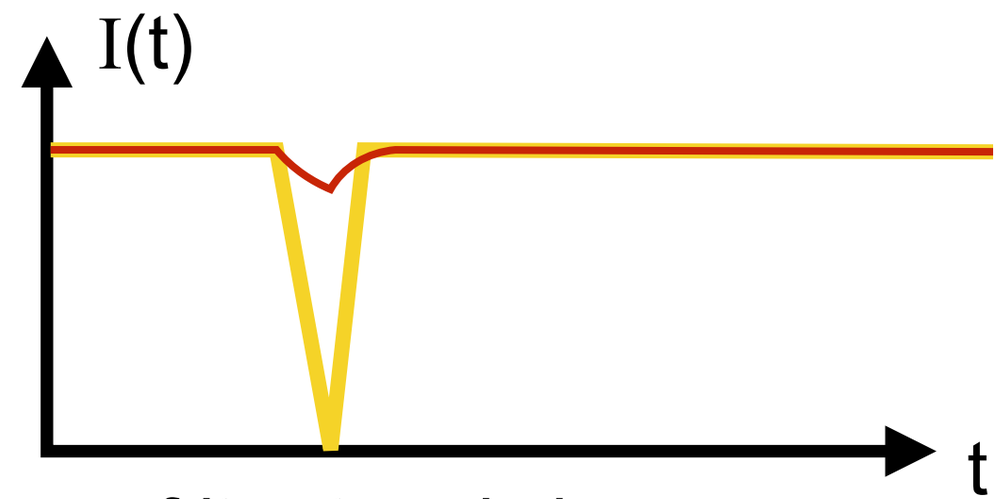

Replaces missing current with some of its stored charge

Timing and Integration

Simple way to time things

Trigger an event when voltage on capacitor reaches some **value**.

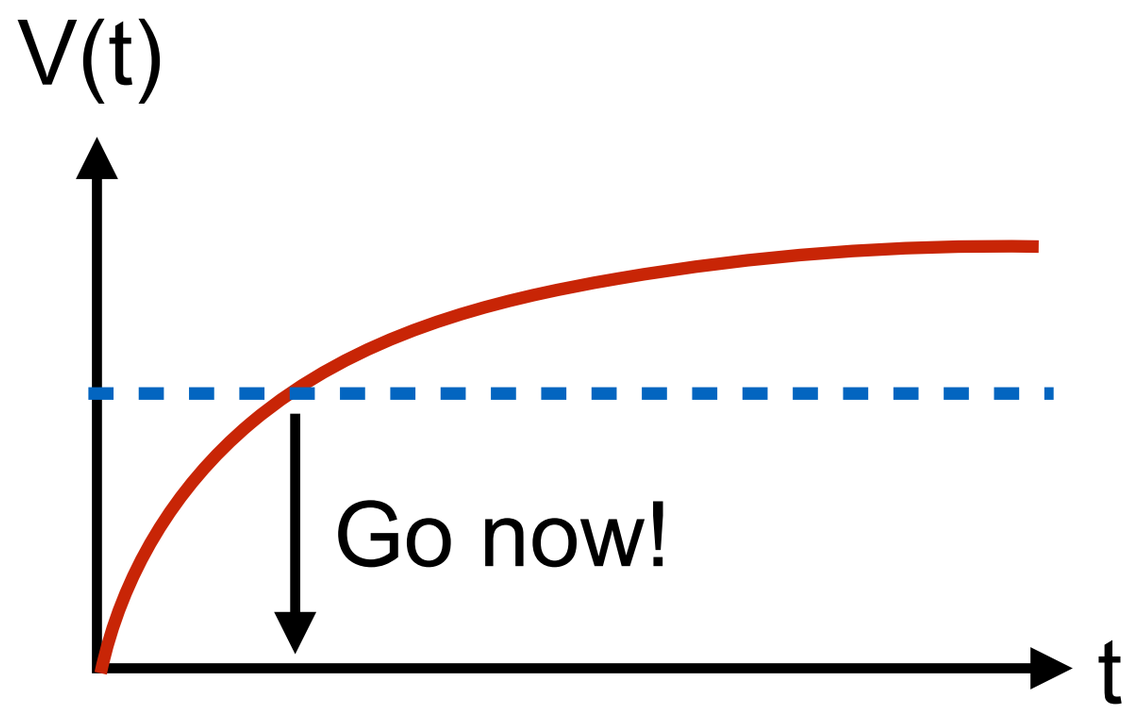

Complex circuitry needed to measure capacitor's voltage

Integrate changes to current

$$Q = \int I(t)\, dt$$

Input Current

Capacitor Charge

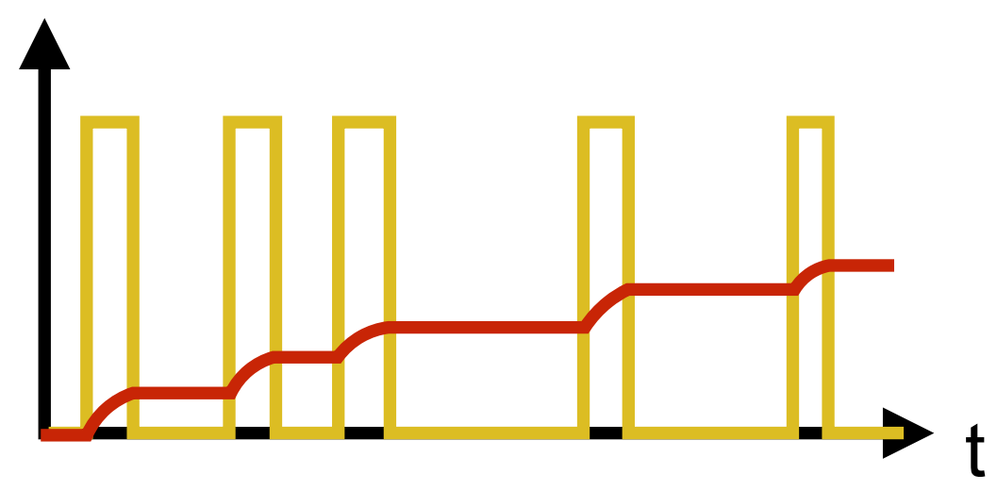

I used this to count photons (light particles) in my PhD research

Cleaning Up Signals

Smooth noisy electrical signals

Without Capacitor

With Capacitor

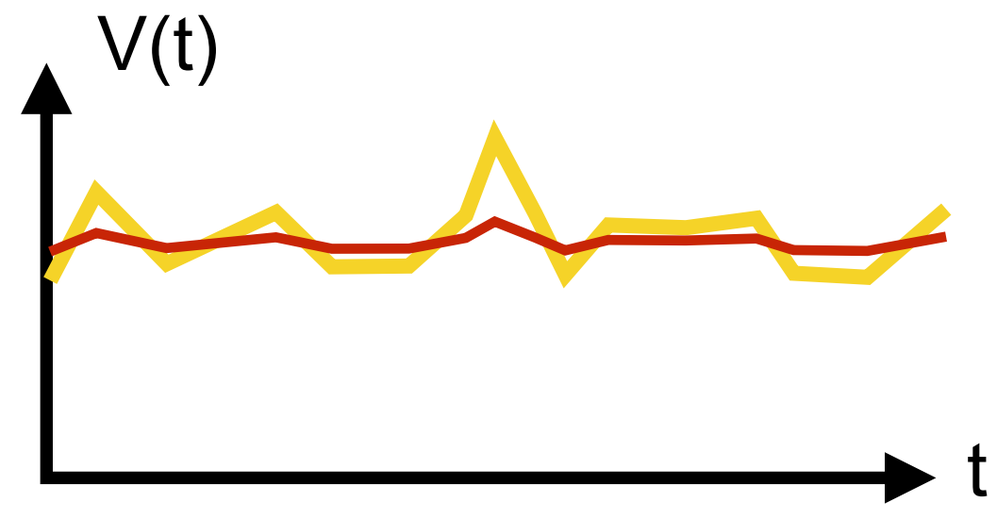

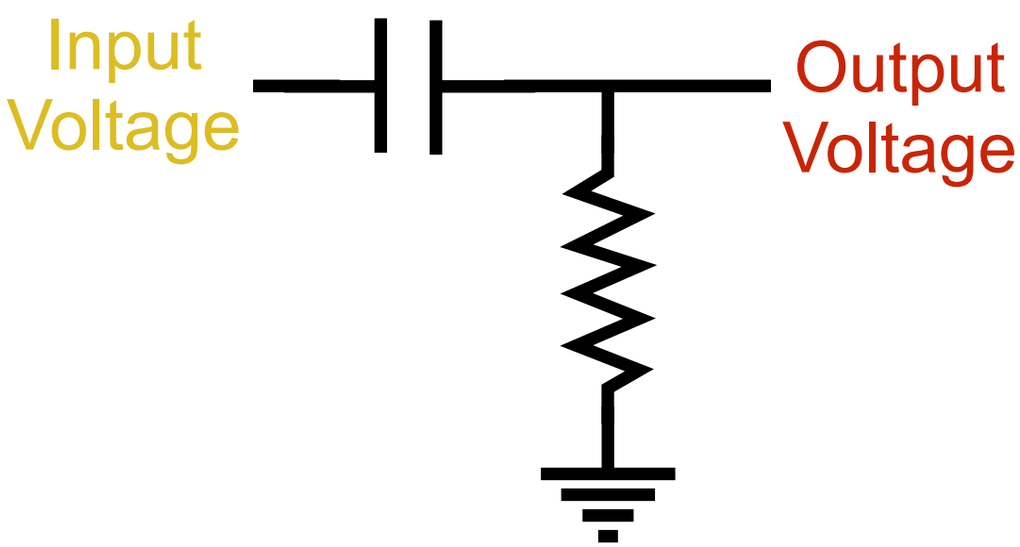

Reduces low frequency noise

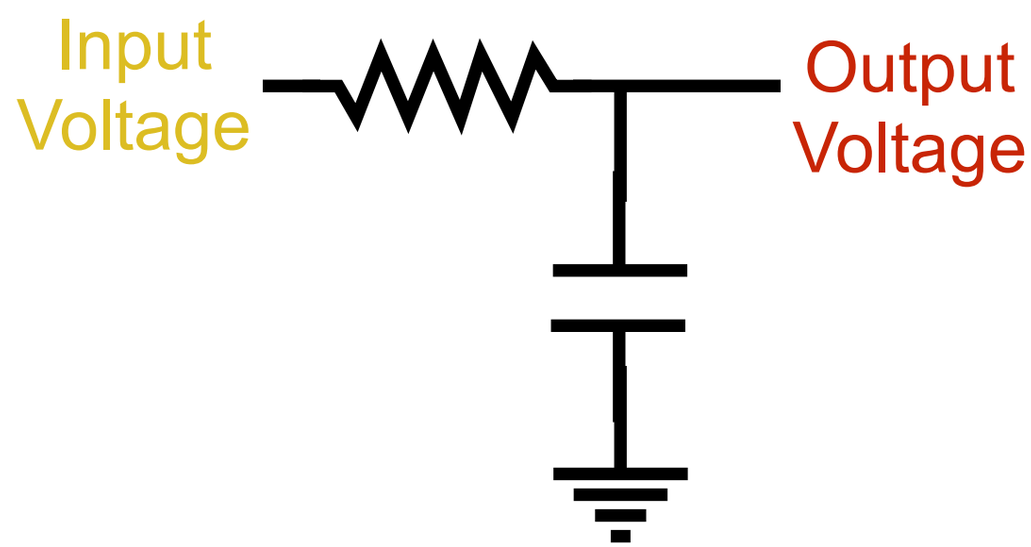

Reduces high frequency noise

Dielectrics

§ 8.4
Lecture 13

Dielectric Materials and $\vec{E}$

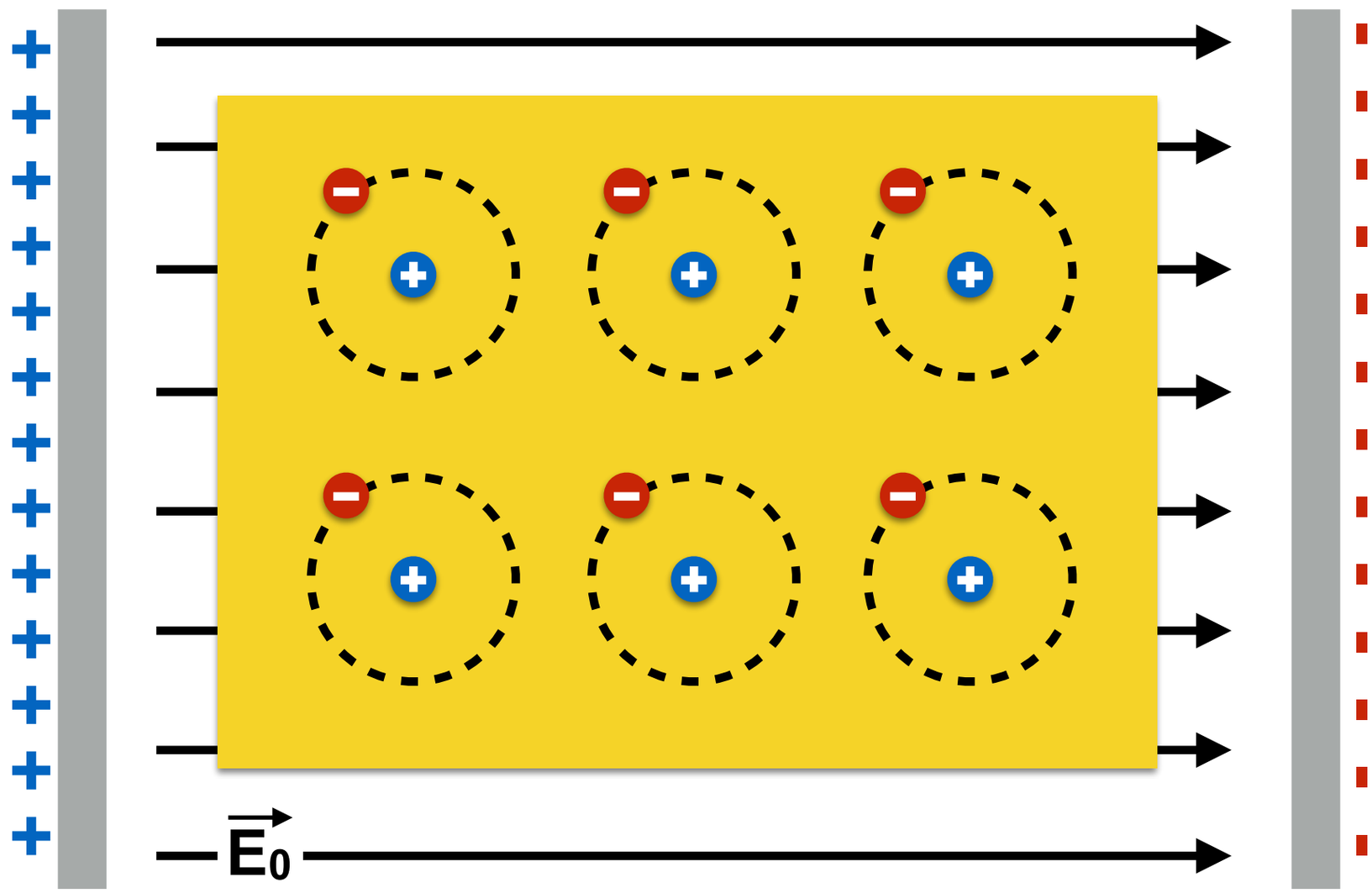

The charges on the capacitor create an electric field $\mathbf{E_0}$.

Dielectric Materials and $\vec{E}$

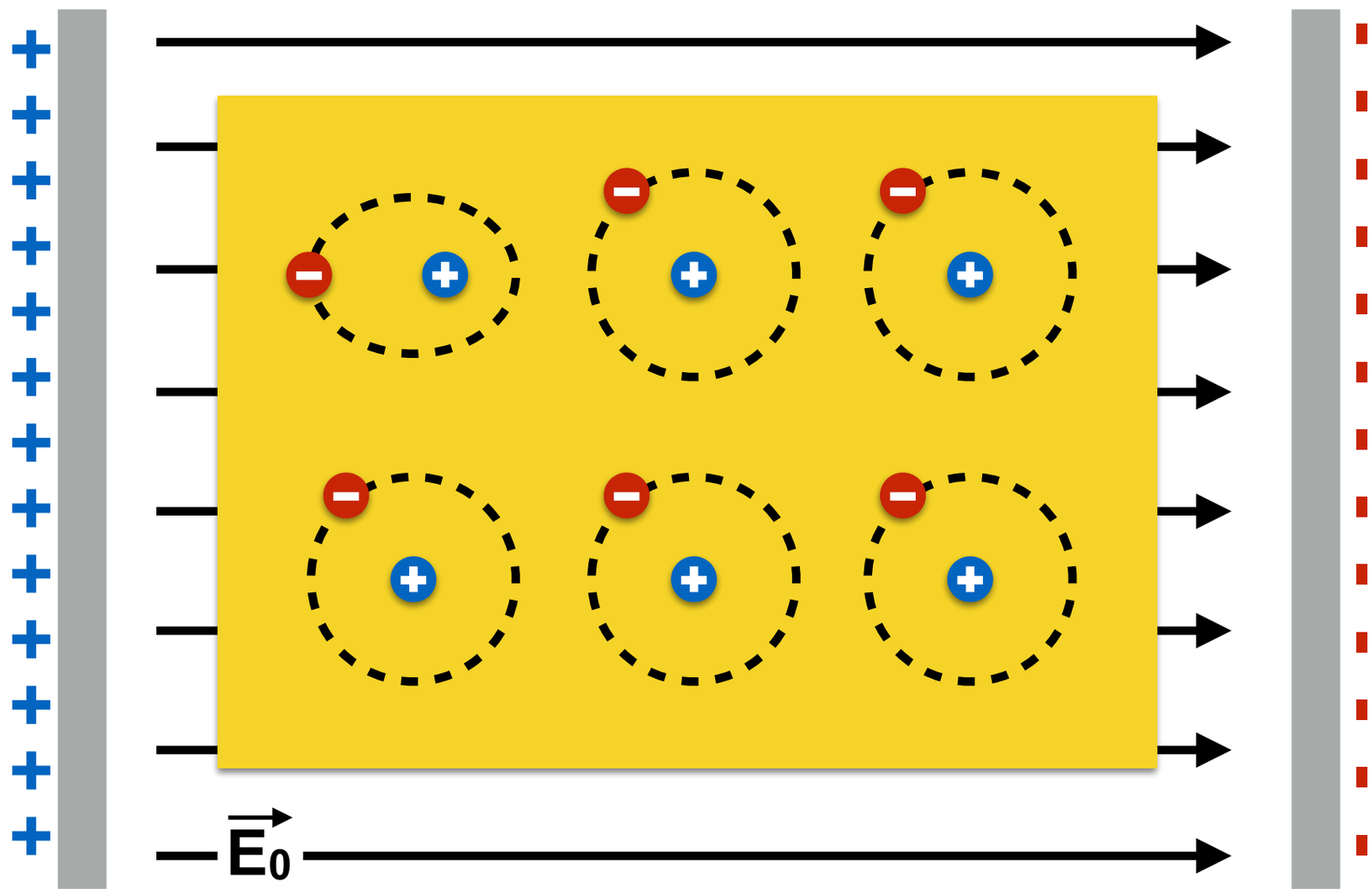

The charges on the capacitor create an electric field $\mathbf{E_0}$.

Atoms in the dielectric deform due to the electric field.

Dielectric Materials and $\vec{E}$

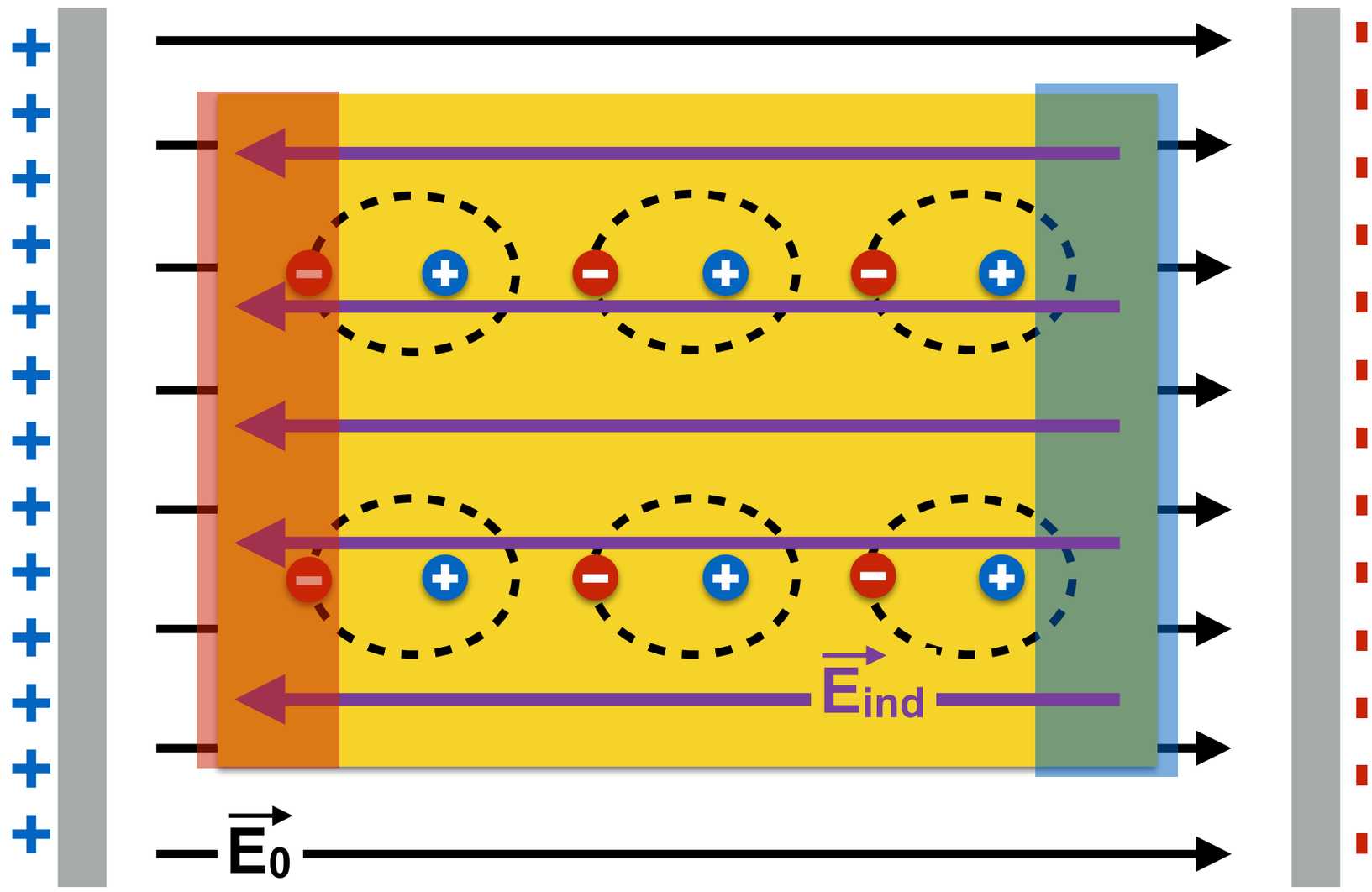

The charges on the capacitor create an electric field $\mathbf{E_0}$.

Atoms in the dielectric deform due to the electric field.

The atoms induce another electric field in the material, $\mathbf{E_{ind}}$.

The total field ($\mathbf{E_0}$ + $\mathbf{E_{ind}}$) between the plates is smaller, reducing the potential difference between the plates.

$$C = \frac{Q}{\Delta V}$$

Two Capacitors

Two capacitors are identical, except capacitor B has a dielectric with constant κ=2.

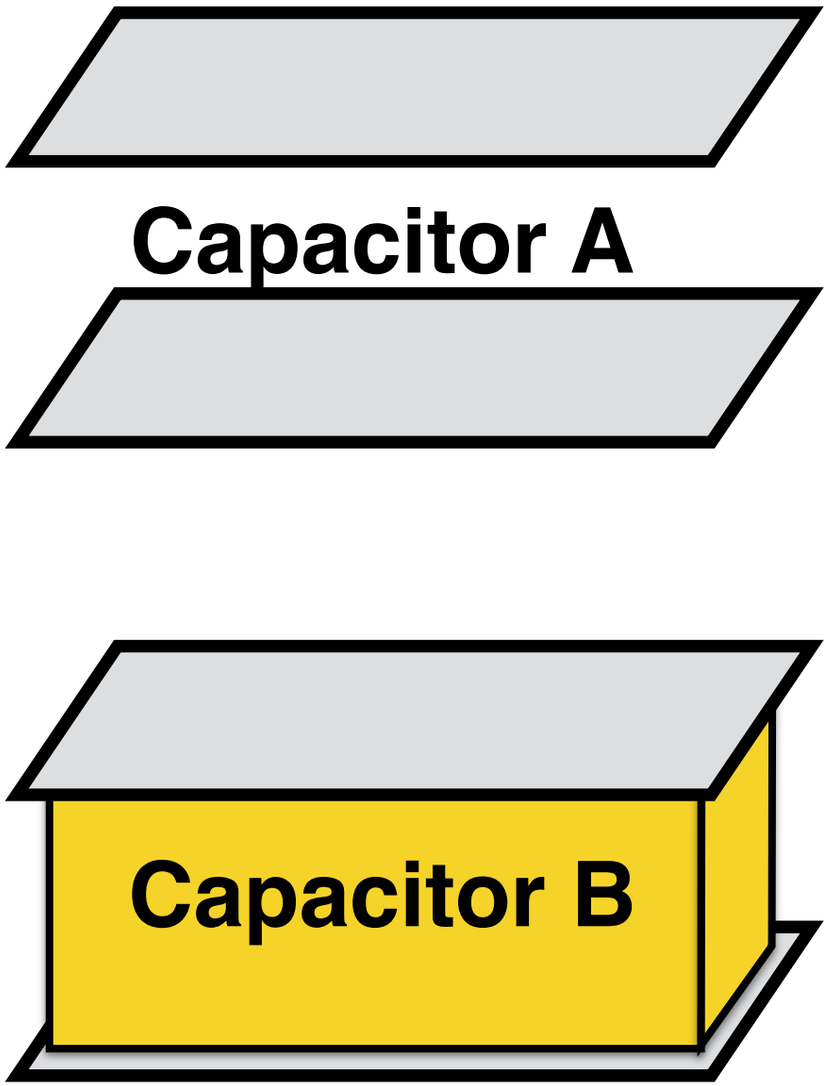

The capacitance of capacitor B is…

1. The same as capacitor A
2. Two-times larger than A
3. Half-as large as A
0. Don't wait on my response

$$C = \kappa C_0$$

Two Capacitors

Two capacitors are identical, except capacitor B has a dielectric with constant κ=2.

When connected to the same voltage source, the charge on capacitor B is…

1. The same as capacitor A
2. Two-times larger than A
3. Half-as large as A
0. Don't wait on my response

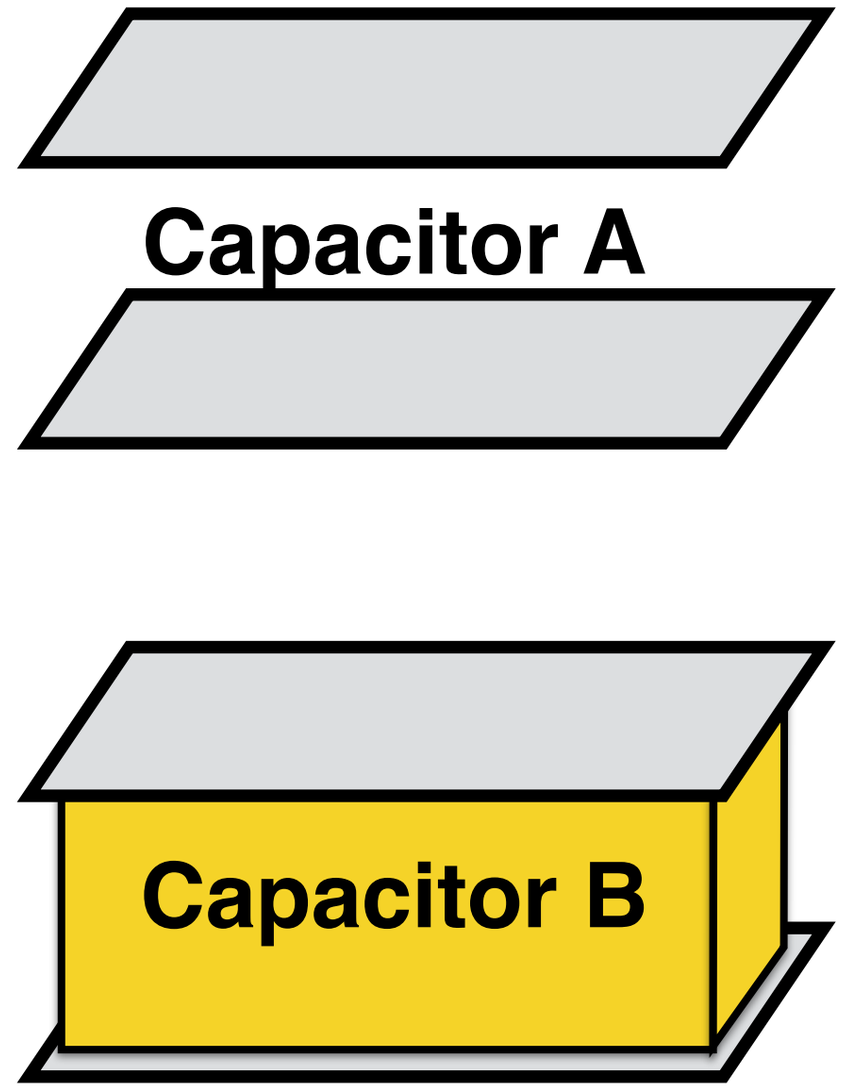

$$Q = C\,\Delta V$$

Constant Capacitor Voltage

When connected to a constant voltage source (a battery), the voltage across the plates is fixed.

But the amount of stored charge can change!

As the plates move farther apart, will the charge stored on the plates increase or decrease?

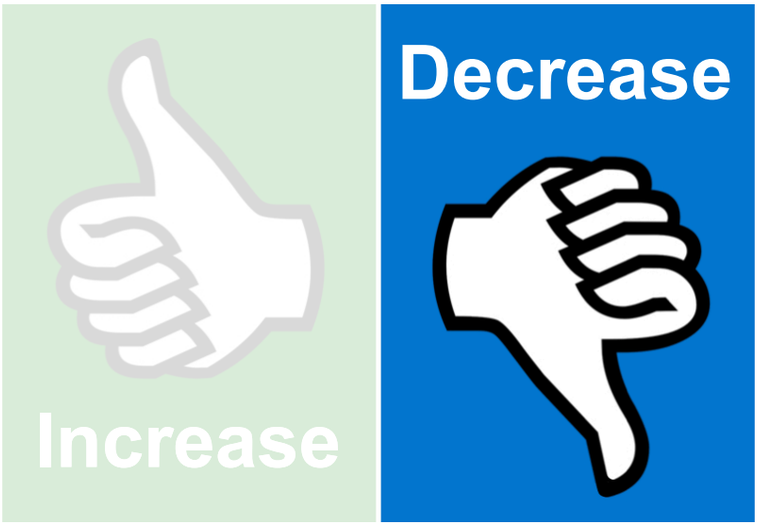

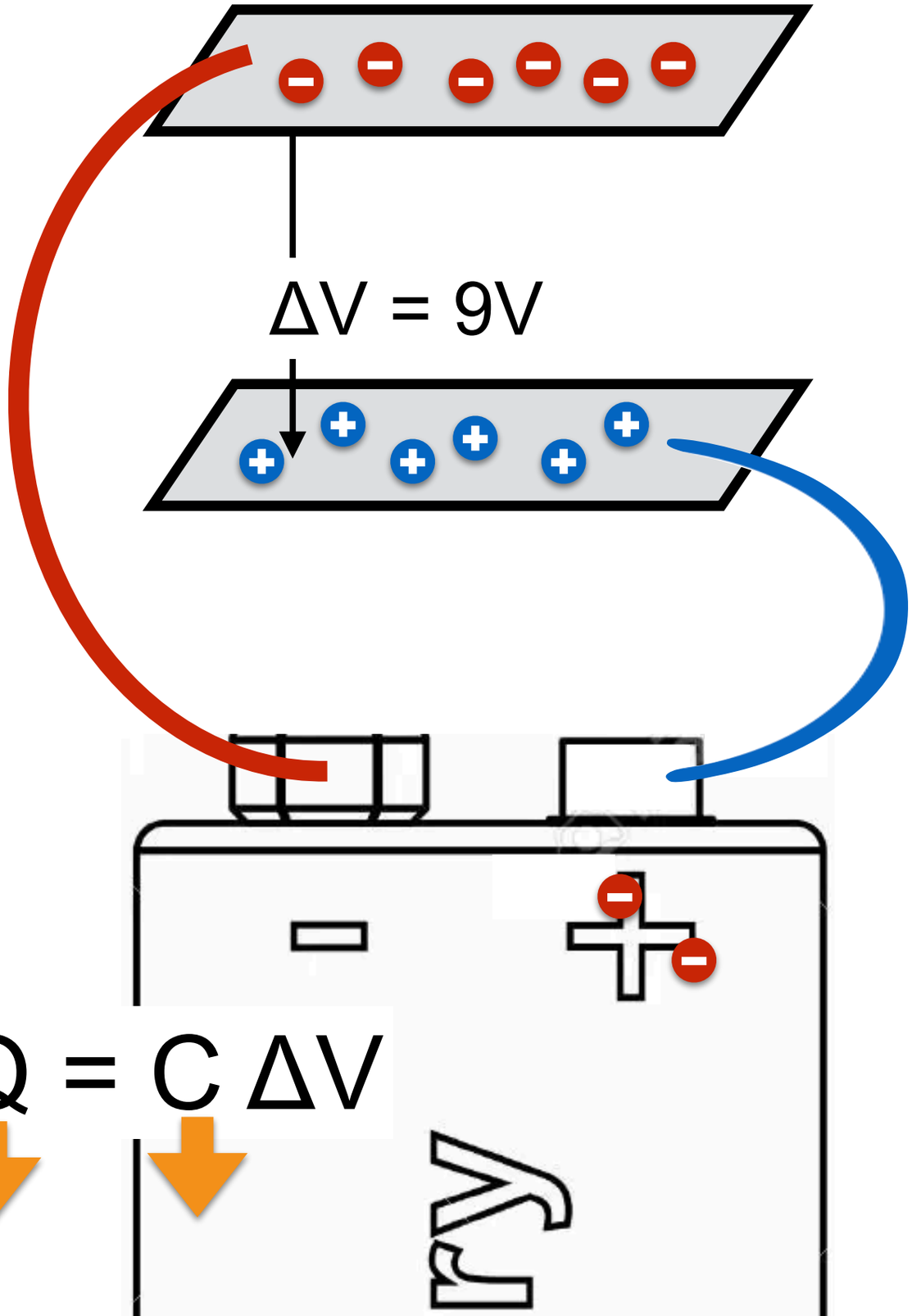

$$Q = C\,\Delta V$$

Constant Capacitor Charge

When disconnected from a voltage source, the amount of charge on the plates stays fixed.

Then the voltage across the plates can change!

As the plates move closer together, will the voltage across the plates increase or decrease?

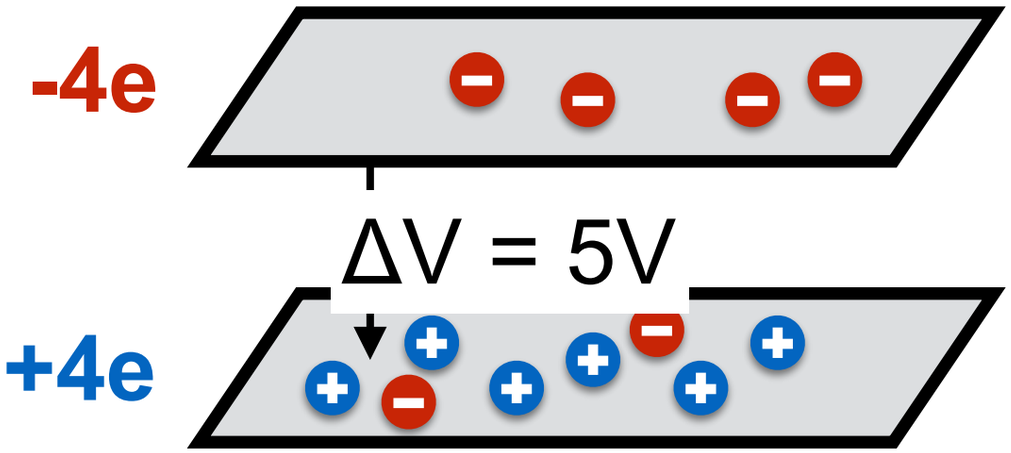

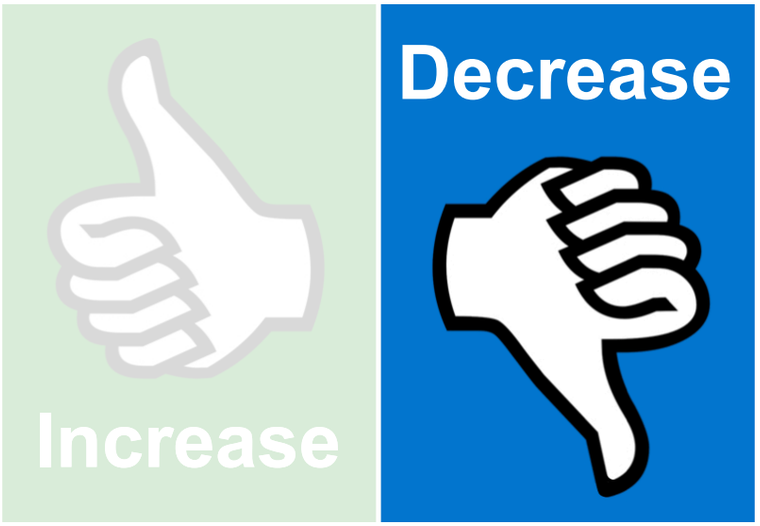

$$Q = C\,\Delta V$$

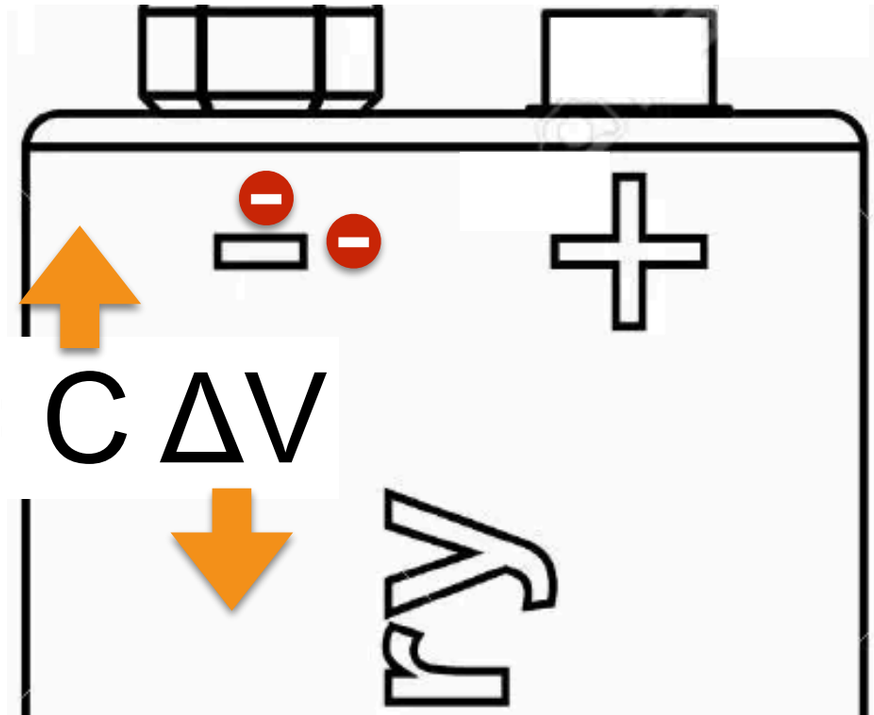

Capacitors & Energy

§ 8.3
Lecture 13

Energy to Remove a Dielectric

A dielectric-filled capacitor with C=60μF is charged to 30mC and then disconnected from its source.

The dielectric (κ=2.4) is carefully pulled out from the plates so that no charge leaves the capacitor.

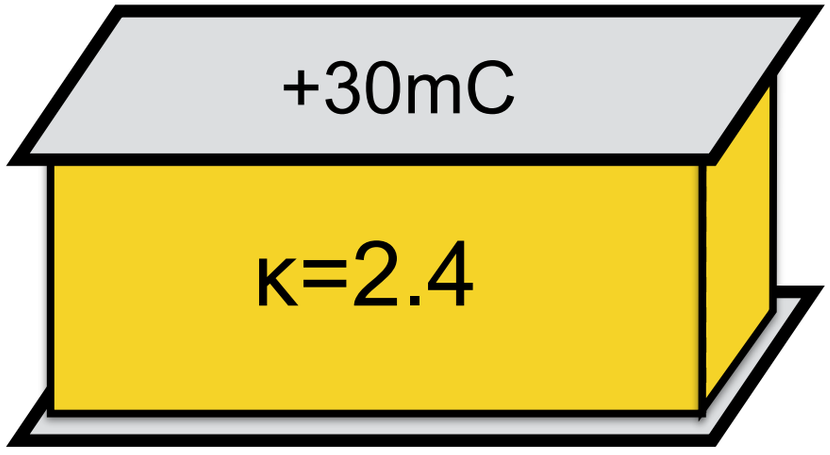

How much did the energy stored in the capacitor change ?

$$U_{C,i} = \frac{Q_i^2}{2C_i} = \frac{(30\times10^{-3})^2}{2(60\times10^{-6})} = 15\ \text{J}$$

$$C = \kappa\, C_0$$
$$C_i = \kappa\, C_f$$

$$U_{C,f} = \frac{Q_f^2}{2C_f} = \frac{Qi^2}{2(C_i/\kappa)} = \frac{(30\times10^{-3})^2}{2(60\times10^{-6}/2.4)} = 36\ \text{J}$$

$$\Delta U_C = U_{C,f} - U_{C,i} = 36\text{J} - 15\text{J} = \mathbf{+24J}$$

Where is this energy "at"?

Electric Energy Density

Energy / Volume: $u_E = \dfrac{U_C}{\text{Vol.}}$

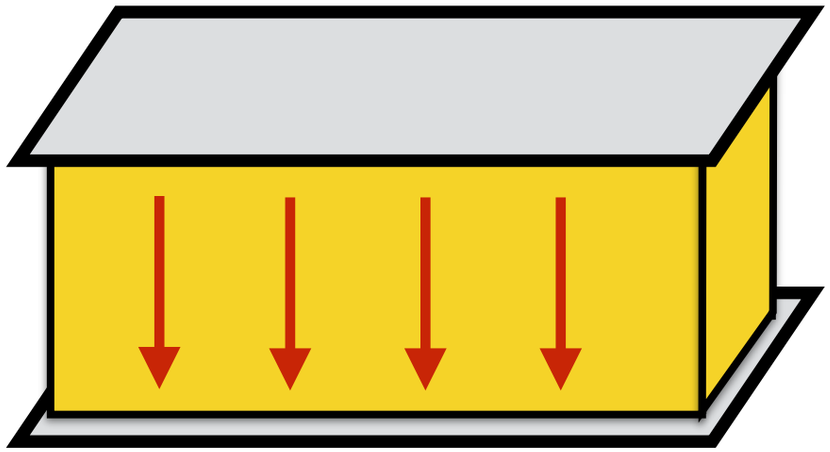

$$u_E = \frac{U_C}{A\,d}$$

$$= \frac{(1/2)\,CV^2}{A\,d}$$

$$= \frac{(1/2)\,(\,\varepsilon_0 \cancel{A} / d)\,V^2}{\cancel{A}\,d}$$

$$= \frac{\varepsilon_0 V^2}{2\,d^2} = \frac{\varepsilon_0 E^2}{2}$$

Energy stored in a capacitor creates the electric field between its plates!

Weak E with dielectric

Stronger E without dielectric

True for all electric fields: $u_E = \dfrac{\varepsilon_0 E^2}{2}$

Pre-class Slides

Dielectrics

§ 8.4
Lecture 13

Youtube Playlist

Dielectrics

Material placed between sides of a capacitor to *increase* its capacitance

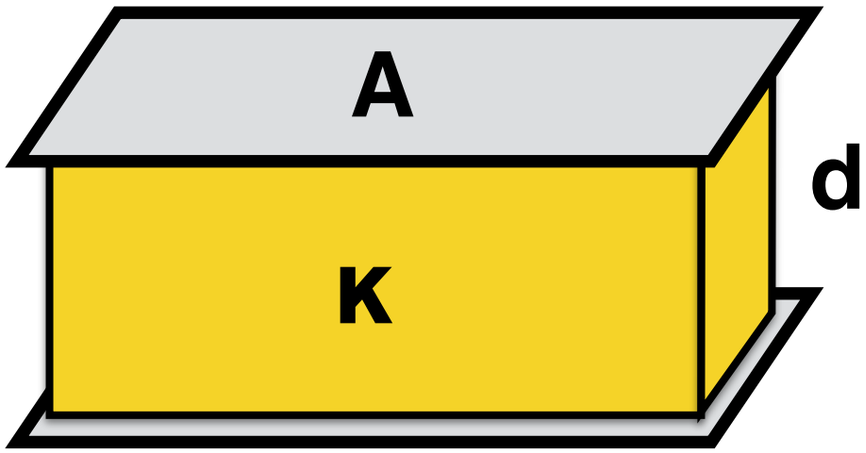

κ - Dielectric Constant - "Strength" of the dielectric

$$C = \kappa C_0$$

Capacitance with dielectric

Capacitance without dielectric

Reduces the voltage needed for a certain amount of charge

Dielectrics

Dielectrics can be made out of…

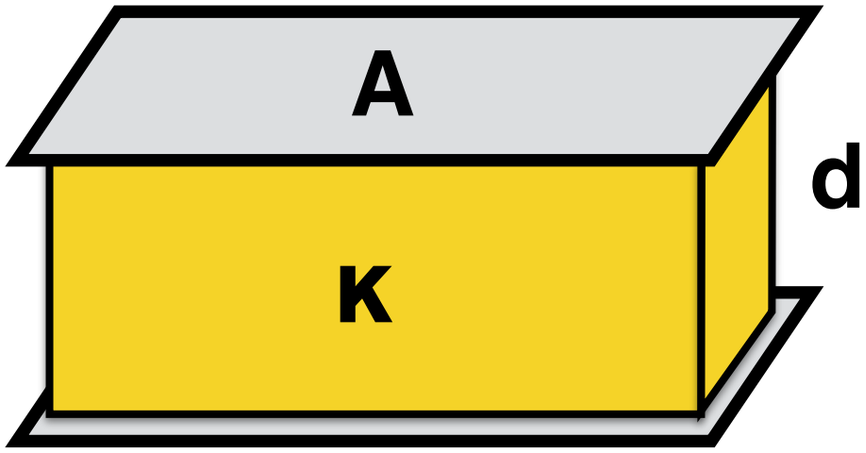

1. Conductors Only
2. Insulators Only
3. Both Conductors and Insulators
0. Don’t wait on my response

Dielectrics

The value for a dielectric constant…

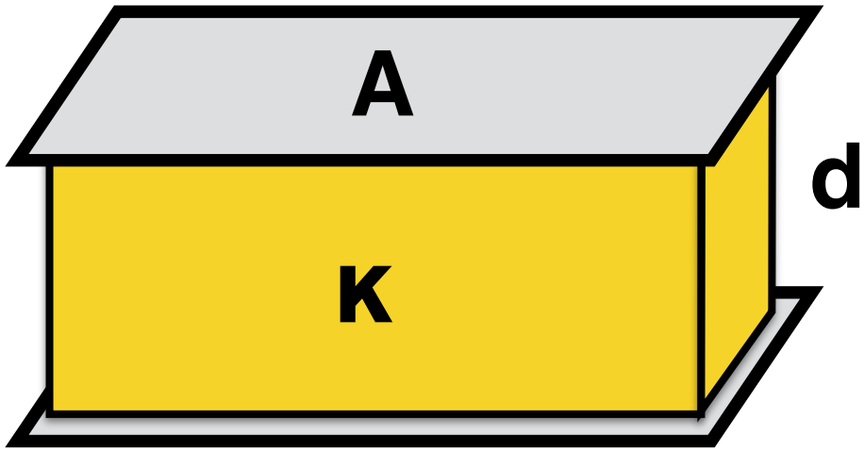

1. Can be any positive number
2. Must be between 0 and 1
3. Must be greater or equal to 1
0. Don't wait on my response

$$C = \kappa C_0$$

Capacitance with dielectric

Dielectric Constant

Capacitance without dielectric

Material placed between sides of a capacitor to *increase* its capacitance

Paper-Foil Capacitor

With Dielectric!

A capacitor is made by covering both sides of a 216mm x 279mm piece of paper with aluminum foil. The paper is a 0.12mm thick.

The dielectric constant of paper is 3.6.

What is the capacitance of this capacitor?

$C_0 = 4.4$ nF $\qquad C = \kappa C_0 = (3.6)(4.4\text{nF}) = 16$ nF

How much charge will it store when connected to a 9.0V battery?

$$Q = C\,\Delta V_c = (16\text{ nF})(9.0\text{V}) = 140\text{ nC}$$

$$Q_{\text{no dielectric}} = 40\text{ nC}$$

Capacitors & Energy

§ 8.3
Lecture 13

Capacitors & Energy

What is the energy required to arrange the ±Q charges in a capacitor?

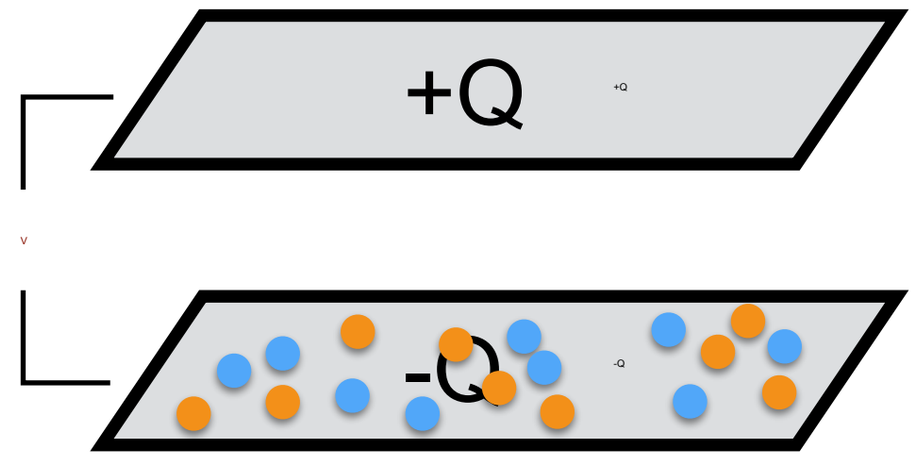

$$U_e = q\,V$$

Electric potential <u>changes</u> while charge is put into the capacitor!

Energy to add infinitely small charge dq: $dU = dq\,V(q)$

Voltage across capacitor that stores charge q

$$U_e = \int dU = \int_0^Q dq\,V(q) = \int_0^Q dq\,\frac{q}{C}$$

Capacitors & Energy

Integrating Charge

What is $\int_0^Q dq \frac{q}{C}$?

1. Q / C
2. Q^2 / C
3. $\ln (Q/C)$
4. $Q^2 / (2C)$
5. $(Q-C)^2$

$$U_e = \int_0^Q dq \frac{q}{C}$$

$$U_e = \frac{Q^2}{2C}$$

Both are good
Which values
do you know?

$$U_e = \frac{(CV)^2}{2C}$$

$$U_e = \frac{1}{2} CV^2$$