July 26, 2023

Meet at **noon** tomorrow!

12pm-1pm : **Lecture**

1pm-2pm : **Studio**

Reflection 5 : Due Friday by midnight

Conceptual HW 5 : Due Sunday by midnight

Office Hours

Mondays Noon-2pm

Thursdays 2-3pm

	Monday	Tuesday	Wednesday	Thursday	Friday
Week 4	**July 17** V2 CH 8	**July 18** Homework 3 Lab W4 - Electric Potential	**July 19** V2 CH 8	**July 20** V2 CH 9 Studio : V and C	**July 21** Reflection Quiz 1&2: CH 5-7
Week 5	**July 24** V2 CH 9	**July 25** Homework 4 Lab W5 - Potential & Field	**July 26** V2 CH 9	**July 27** V2 CH 10 Studio : Ohm's Law	**July 28** V2 CH 10 Reflection
Week 6	**July 31** V2 CH 10	**Aug 1** Homework 5 Lab W6 - Resistivity	**Aug 2** V2 CH 11	**Aug 3** V2 CH 12 Studio : Circuits	**Aug 4** Reflection Quiz 3&4: CH 8-10

Chapter 10

DC Circuits

Series & Parallel Resistors

§ 10.2
Lecture 16

Three Resistors

Drawing

You are given three identical resistors with resistance R.

There are <u>four</u> unique ways the resistors can be connected together. Sketch them.

Rank them in order of total resistance from largest to smallest.

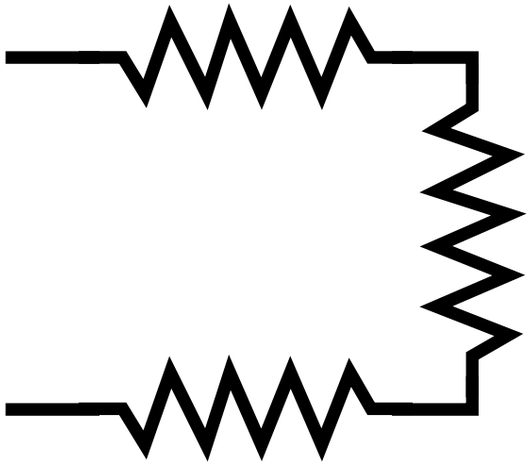

A

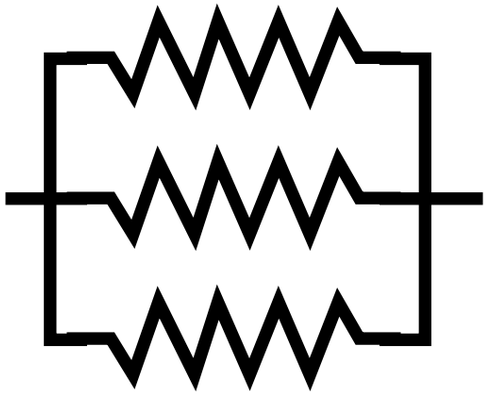

B

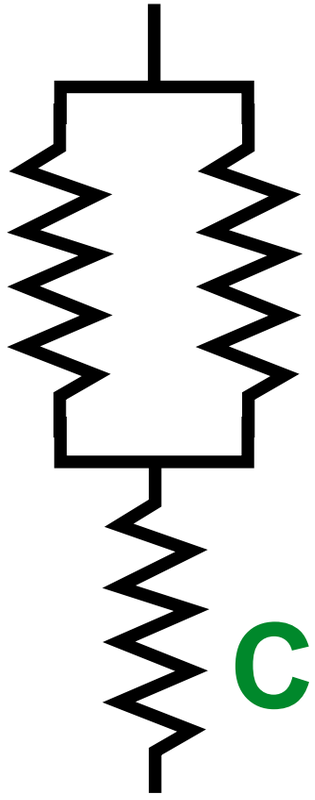

C

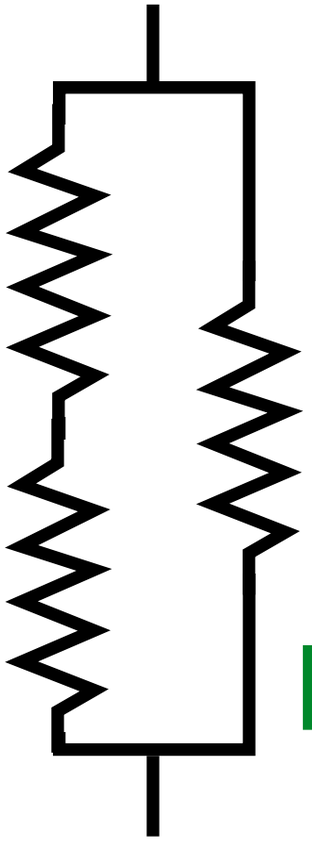

D

Three Resistors

Ranking - Solutions

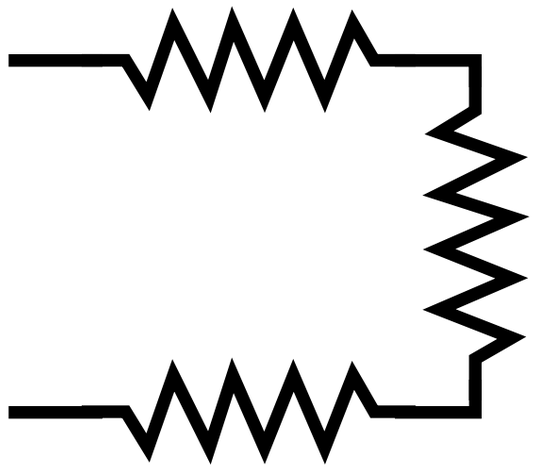

A

All in series

$R_A = 3R$

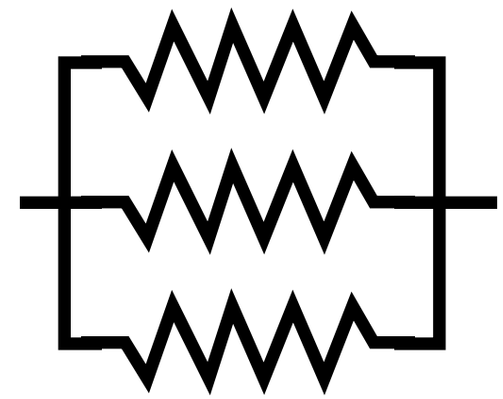

B

All in parallel

$R_B = R/3$

C

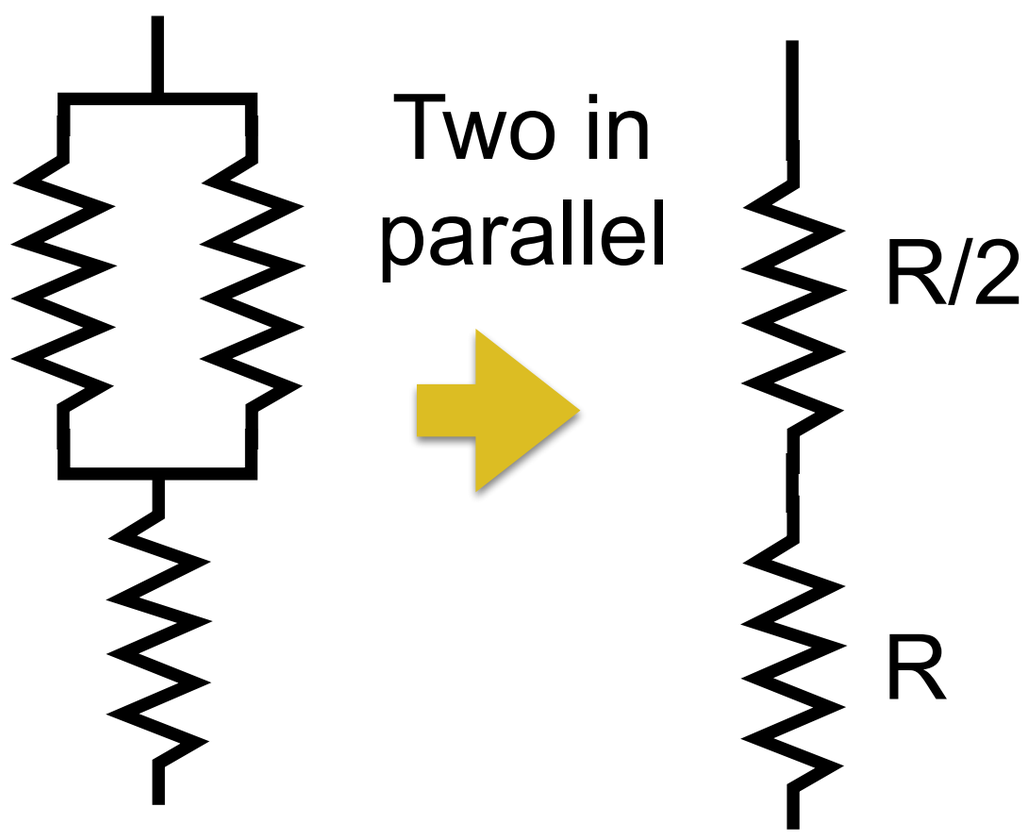

In series:

$R_C = R/2 + R = (3/2)\,R$

Three Resistors

Ranking - Solutions, part 2

D

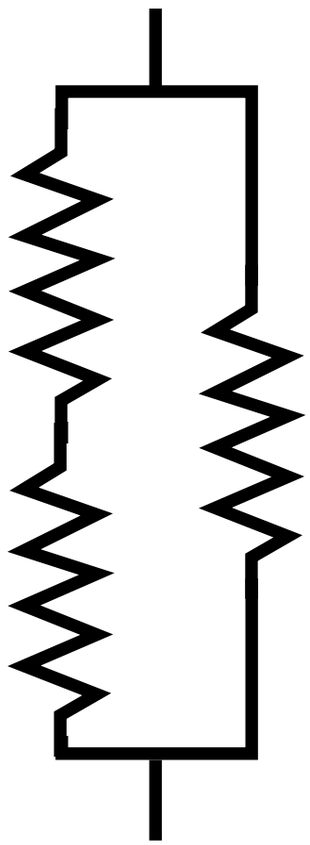

Two in Series

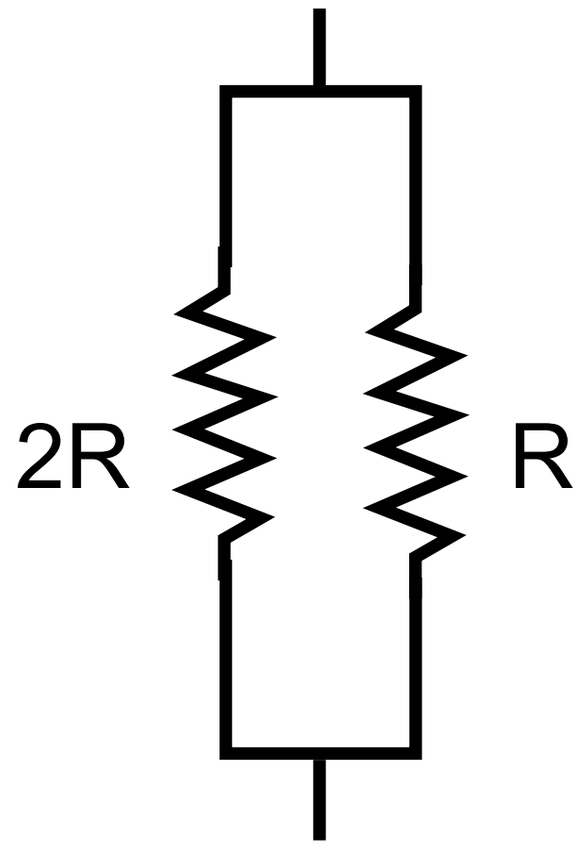

In Parallel:

$$\frac{1}{R_D} = \frac{1}{2R} + \frac{1}{R}$$

$$= \frac{1}{2R} + \frac{2}{2R}$$

$$\frac{1}{R_D} = \frac{3}{2R}$$

$$R_D = \frac{2R}{3} = \frac{2}{3}R$$

$R_A = 3R$

$R_B = R/3$

$R_C = (3/2)\ R$

$R_A > R_C > R_D > R_B$

Circuit Questions

What is the current through
voltage dropped across
power dissipated by a specific resistor?

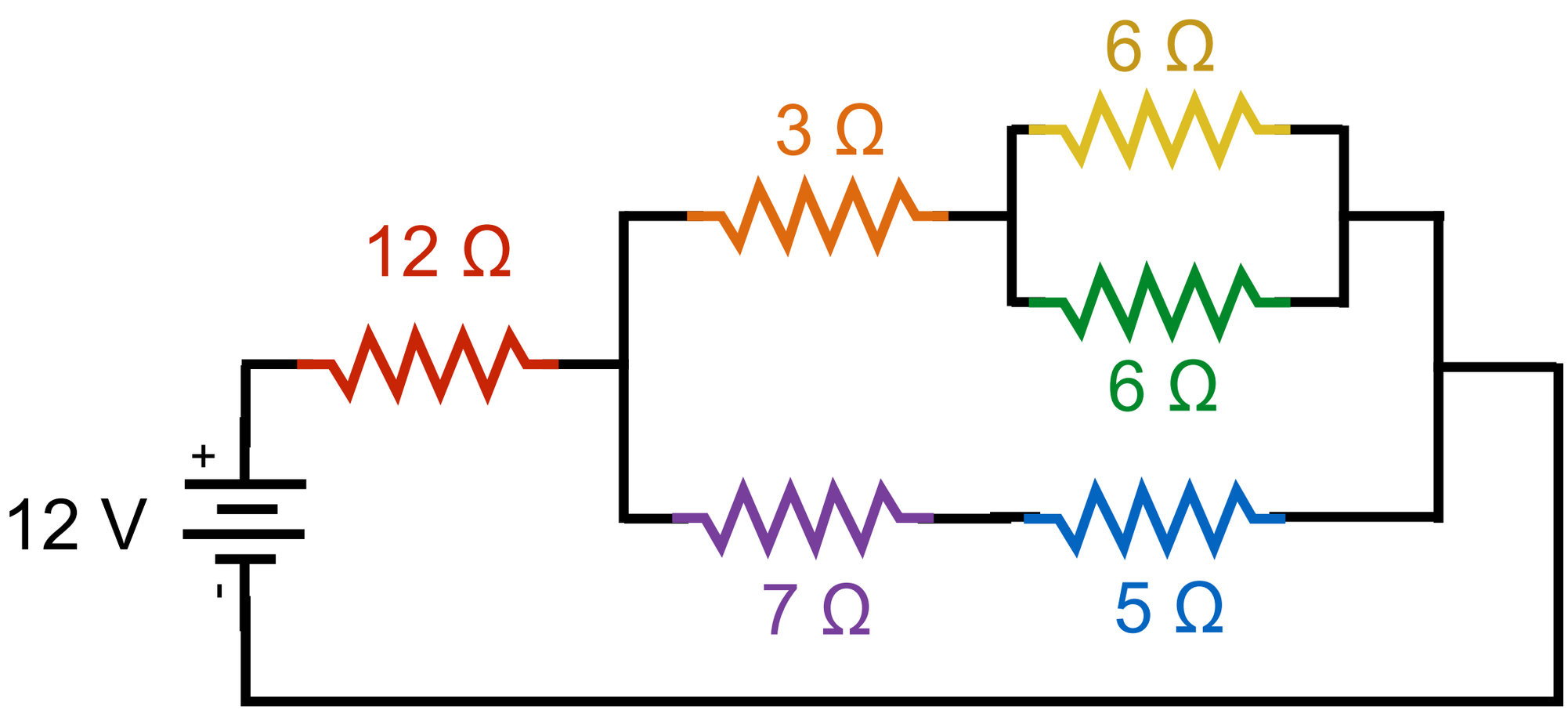

One Approach to Circuit Analysis

1. Reduce to fewest number of resistors

2. Use Loop Rule to find voltage relationships

2. Calculate currents through circuit segments

4. "Unfold" circuit to get I's and V's for all resistors

"Unfold" : Un-do the steps you used to find equivalent resistance.

Apply Kirchoff's and Ohm's law to find the current and voltage for each resistor

Circuit Analysis Example

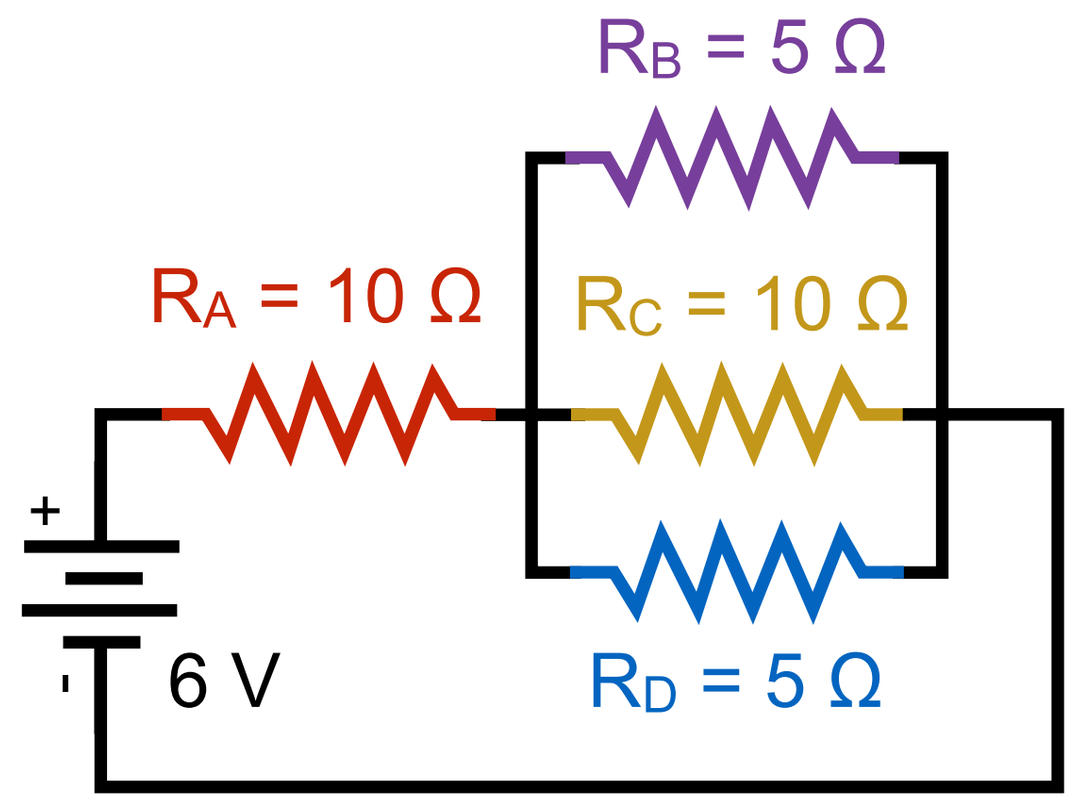

Circuit Analysis Example

Step 1 : Reduce number of resistors

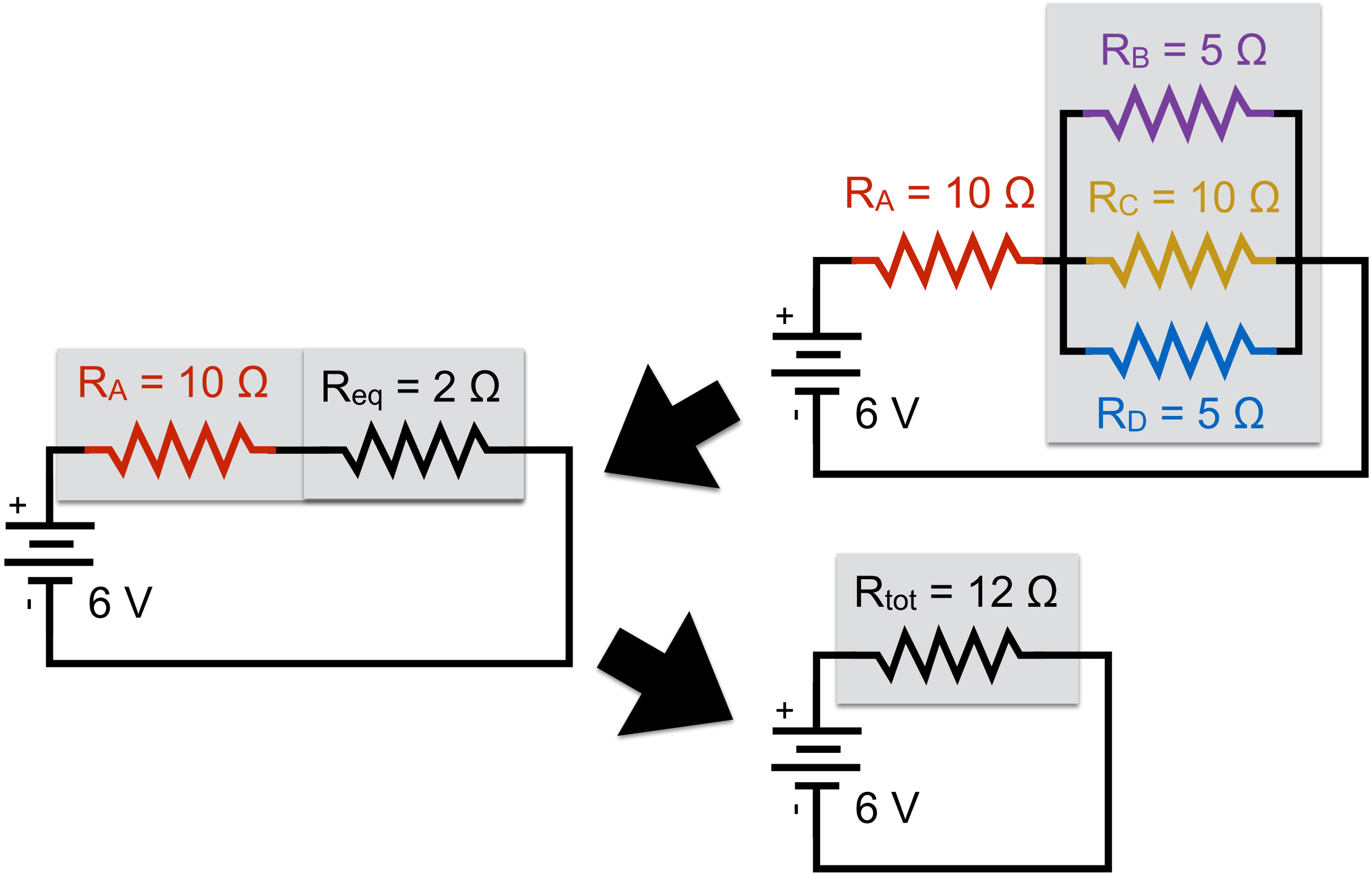

Circuit Analysis Example

Step 2 : Use Loop Rule - Current Direction

Which way does current travel around this circuit?

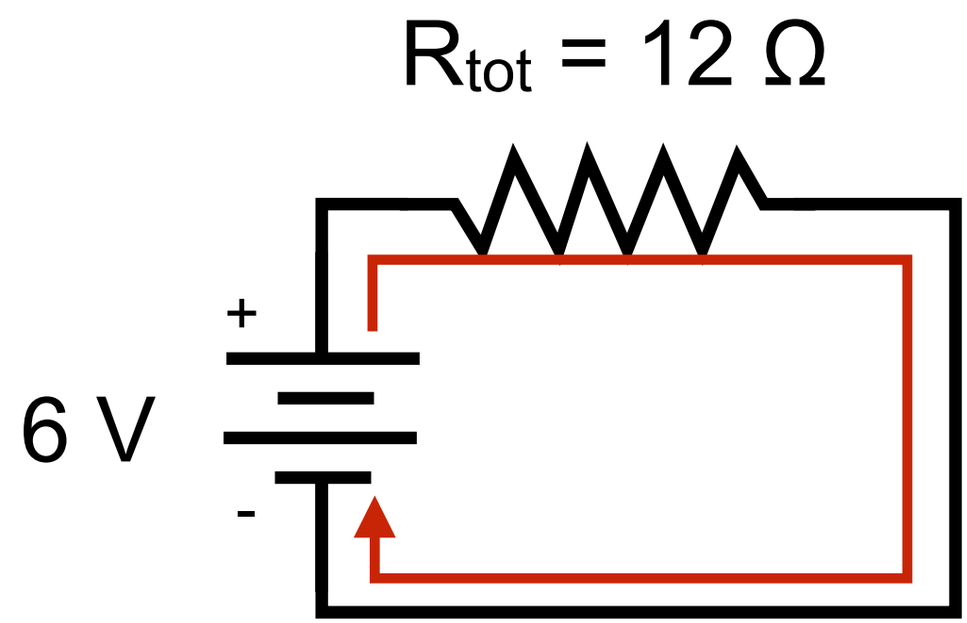

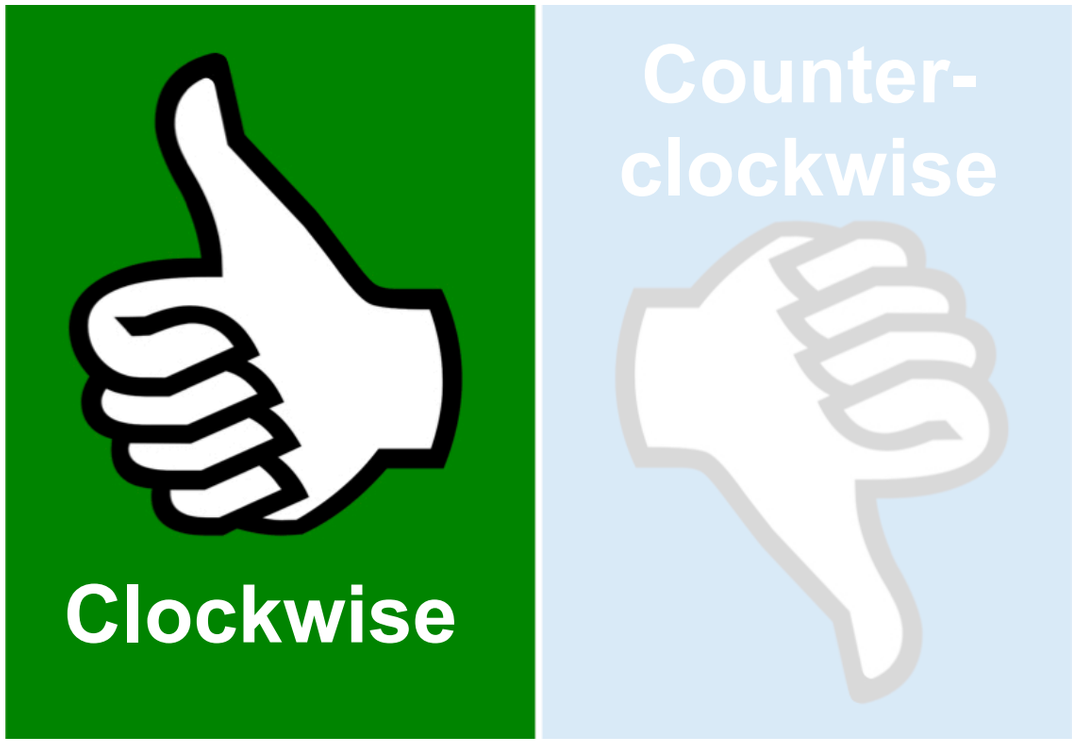

0. Don’t wait on my response

Circuit Analysis Example

Step 2 : Use Loop Rule

For each resistor that the current encounters, the current flow into a higher voltage side (+) and out of a lower voltage side (-).

Label the sides of resistors as **high or low**.

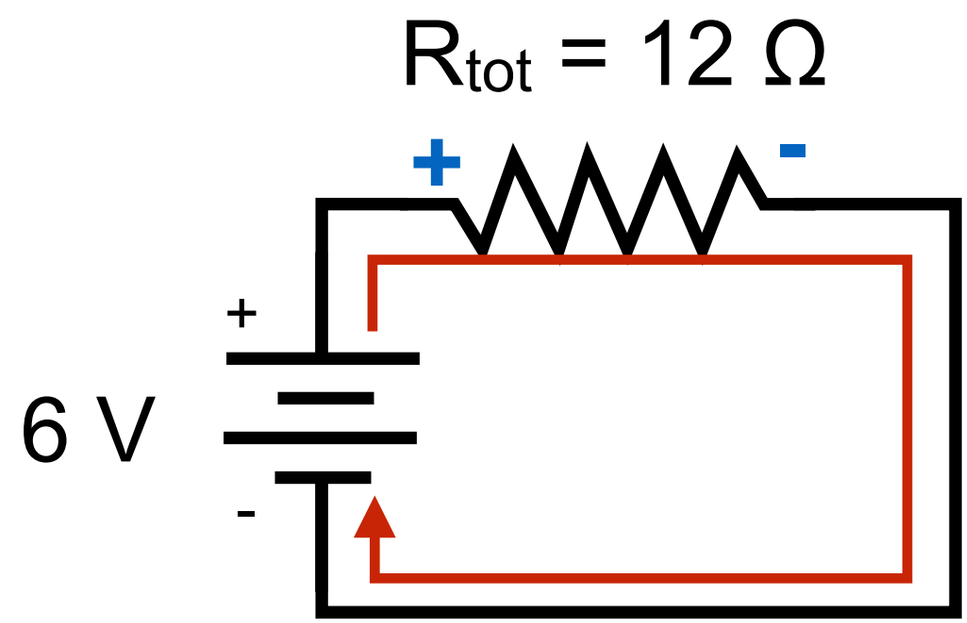

"Walk" around a loop, using the loop rule:

"Walking" through the resistor	"Walking" through the battery	Back to starting point
$-\ \Delta V_R$	$+\ 6\ V$	$= 0$
V decreases (high-to-low)	V increases (low-to-high)	

Circuit Analysis Example

Step 3 : Calculate Currents

$$-\ \Delta V_R + 6V = 0$$

$$\Delta V_R = 6V$$

$$\Big\downarrow$$

Ohm's Law

$$I\,R_{tot} = 6V$$

$$I\,(12\ \Omega) = 6V$$

$$I = 0.5A$$

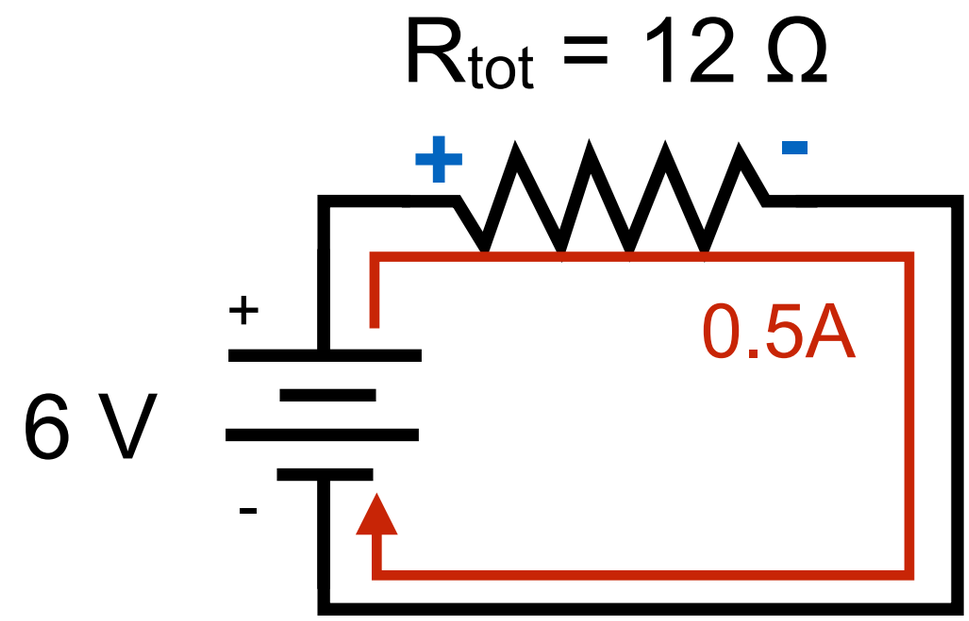

The amount of current that flows out of the battery.

Circuit Analysis Example

Step 4 : Unfold the circuit (part 1a)

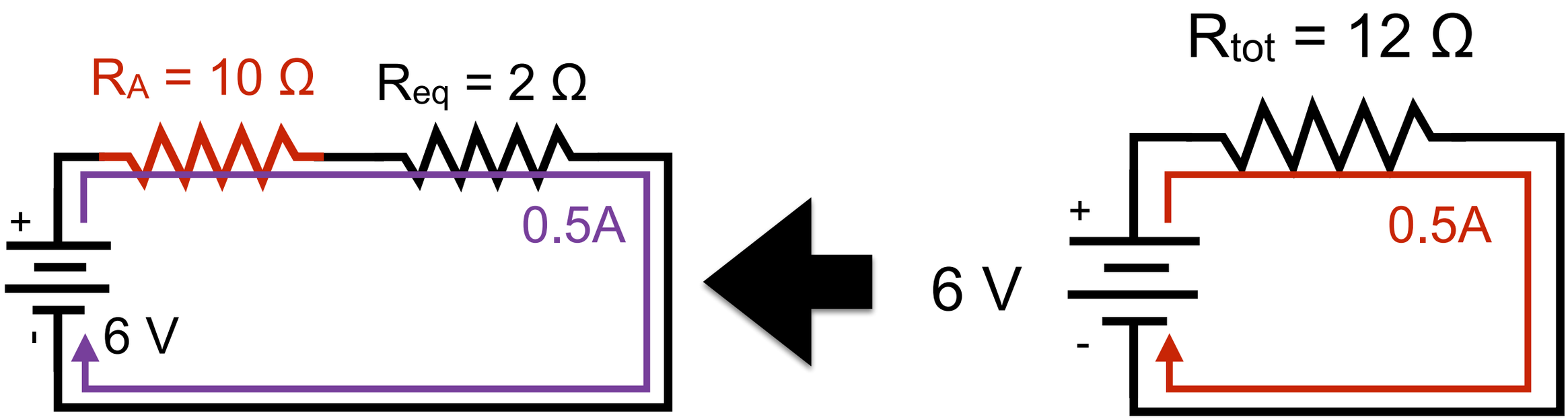

Which current is largest?

1. Current from battery (0.5A)
2. Current through R_A (I_A)
3. Current through R_{eq} ($I_{2\Omega}$)
4. I_A and battery current are equal and largest
5. All three are the same
0. Don't wait on my response

NOTE ON SERIES RESISTORS

The same current always flows through resistors connected together in series.

Circuit Analysis Example

Step 4 : Unfold the circuit (part 1b)

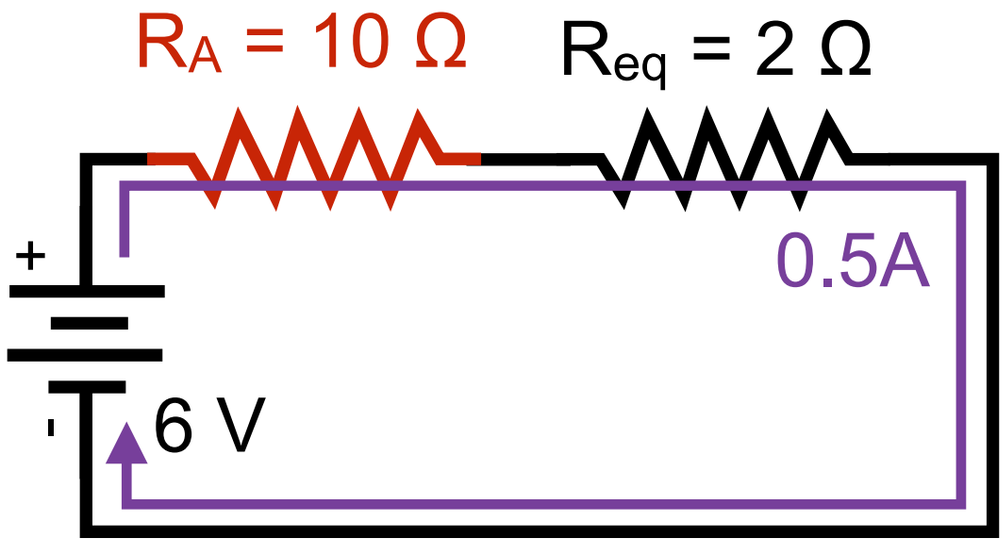

$I_A = 0.5A$

Find the voltage dropped across R_A and the power dissipated by it.

$$\Delta V_A = I_A R_A = (0.5A)(10\ \Omega) = 5V$$

$$P_A = (I_A)^2 R_A = (0.5A)^2(10\ \Omega) = 2.5W$$

Circuit Analysis Example

Step 4 : Unfold the circuit (part 2a)

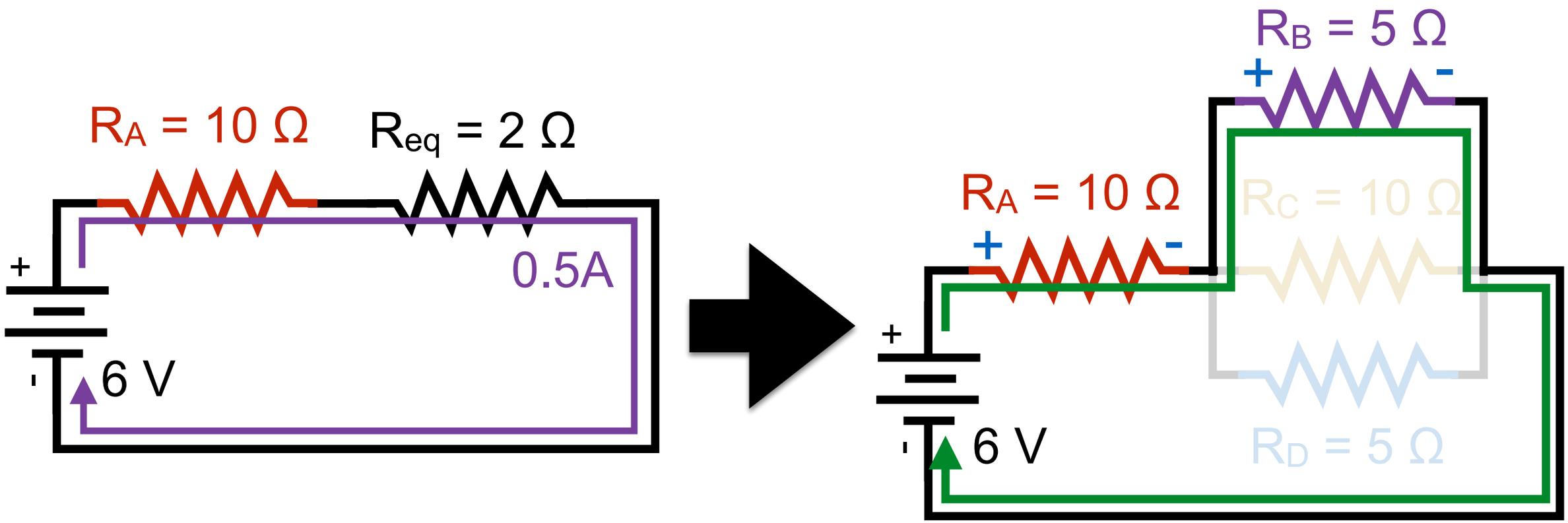

Label the sides of resistors as **high (I in) or low (I out)**.

"Walk" around a loop, using the loop rule:

V decreases (high-to-low)	V decreases (high-to-low)	V increases (low-to-high)	
$-\ \Delta V_A$	$-\ \Delta V_B$	$+\ 6V$	$= 0$

$$-(5V) - \Delta V_B + 6V = 0 \longrightarrow \Delta V_B = 1V$$

Circuit Analysis Example

Step 4 : Unfold the circuit (part 2a-C)

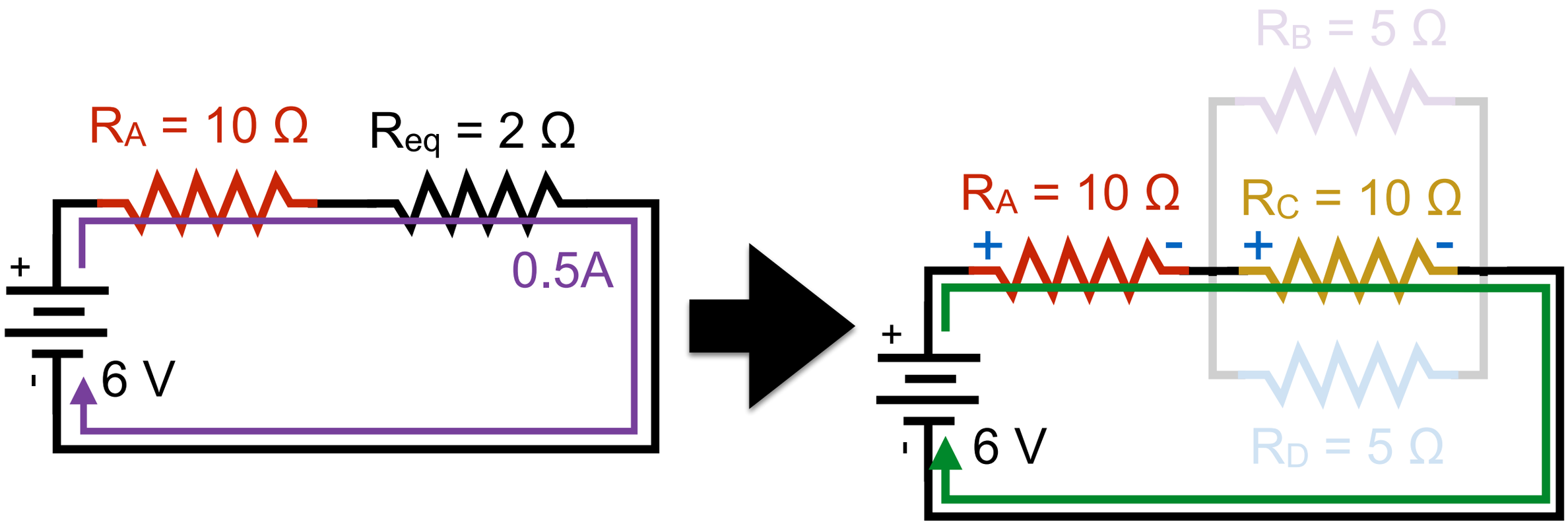

Label the sides of resistors as **high (I in) or low (I out)**.

"Walk" around a loop, using the loop rule:

V decreases (high-to-low)	V decreases (high-to-low)	V increases (low-to-high)	
$-\ \Delta V_A$	$-\ \Delta V_C$	$+\ 6V$	$= 0$

$$-(5V) - \Delta V_C + 6V = 0 \longrightarrow \Delta V_C = 1V$$

Circuit Analysis Example

Step 4 : Unfold the circuit (part 2a-D)

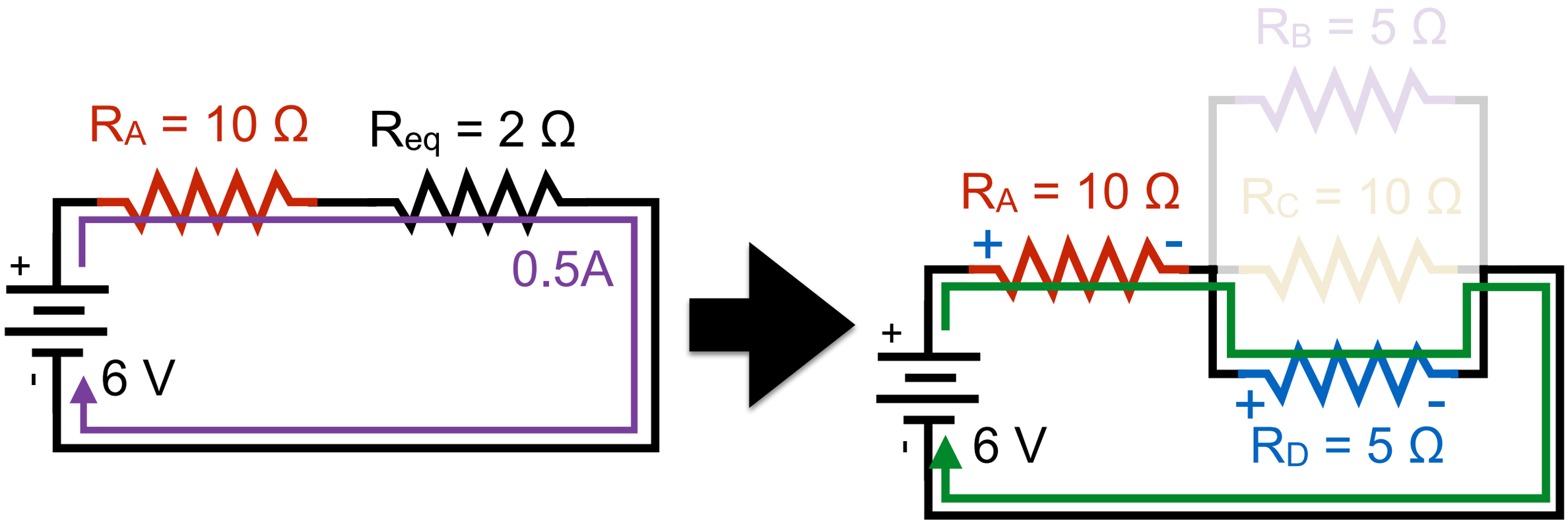

Label the sides of resistors as **high (I in) or low (I out)**.

"Walk" around a loop, using the loop rule:

V decreases (high-to-low)	V decreases (high-to-low)	V increases (low-to-high)	
$-\ \Delta V_A$	$-\ \Delta V_D$	$+\ 6V$	$= 0$

$$-(5V) - \Delta V_D + 6V = 0 \longrightarrow \Delta V_D = 1V$$

Circuit Analysis Example

Step 4 : Unfold the circuit (part 2b)

$\Delta V_B = \Delta V_B = \Delta V_B = 1V$

Does the same amount of current go through each parallel path?

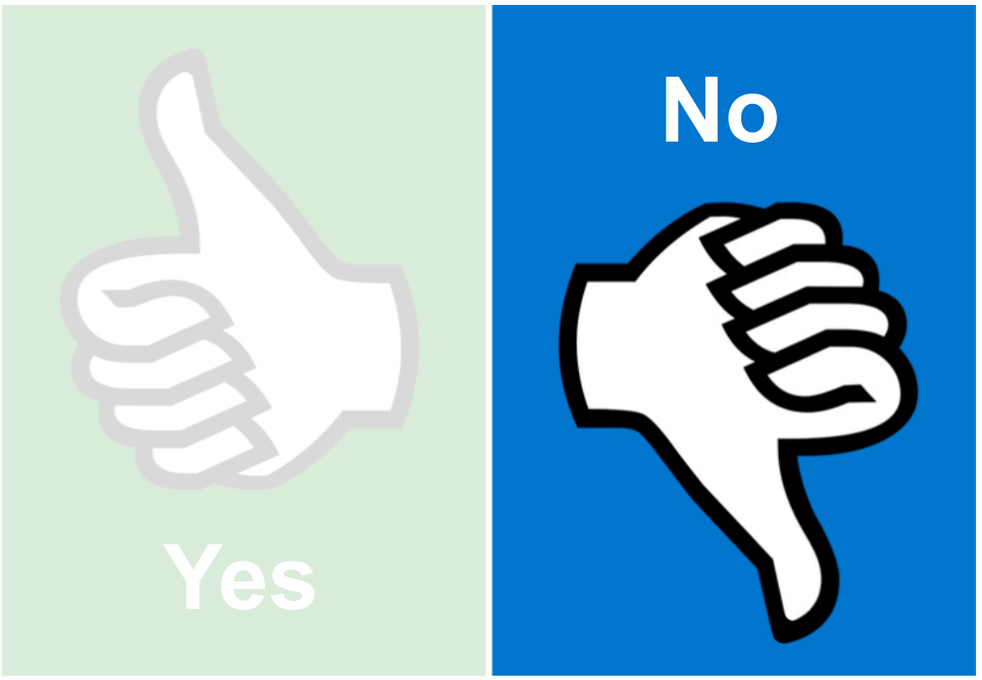

0. Don't wait on my response

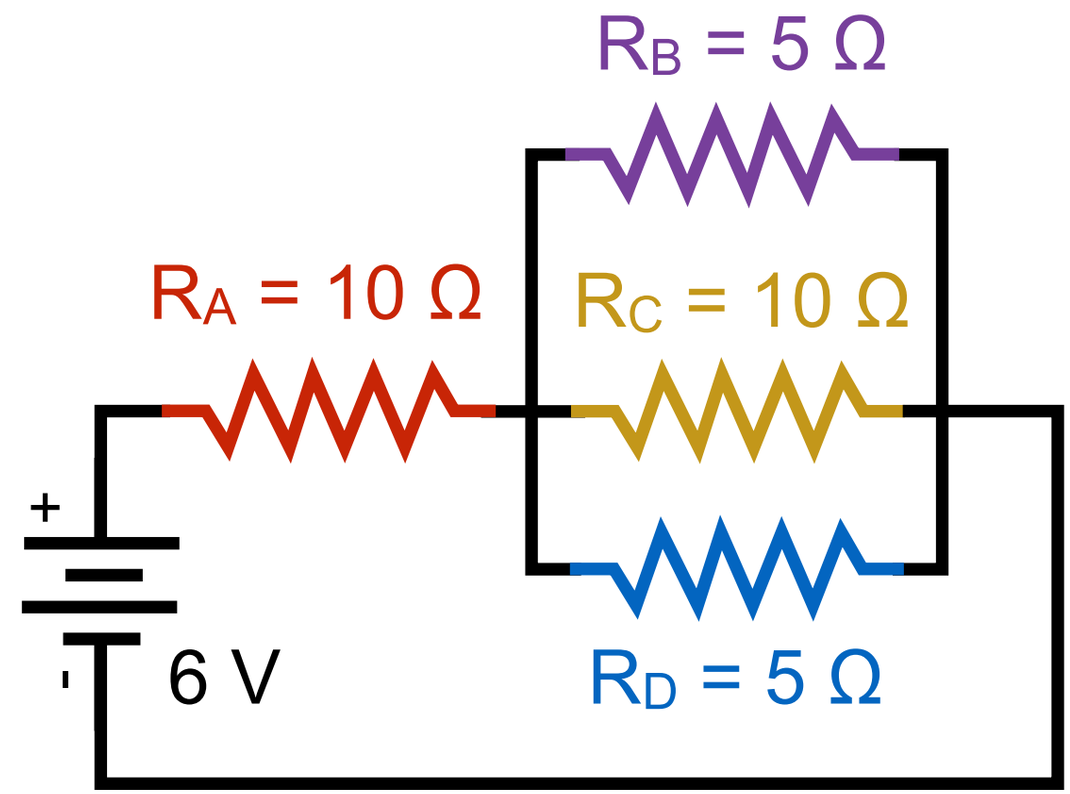

$$I_B = \frac{\Delta V_B}{R_B} = \frac{1V}{5\Omega} = 0.2A$$

$$I_C = \frac{\Delta V_C}{R_C} = \frac{1V}{10\Omega} = 0.1A$$

$$I_D = \frac{\Delta V_D}{R_D} = \frac{1V}{5\Omega} = 0.2A$$

Note that : $I_A = I_B + I_C + I_D$

This agrees with the junction rule!

NOTE ON PARALLEL RESISTORS

There is the same voltage dropped across resistors connected together in parallel.

Pre-class Slides

Topic Review

§ —
Lecture 16

Youtube Playlist

Rules & Laws

Kirchoff's Junction Rule : Current flowing into the junction equals the current flowing out of the junction.

$$\left(\sum I_{in}\right) - \left(\sum I_{out}\right) = 0$$

Consequence of Conservation of Charge

Kirchoff's Loop Rule : Sum of voltage changes around any closed loop is zero.

$$\Delta V_{loop} = \sum_i \Delta V_i = 0$$

Consequence of Conservation of Energy

Ohm's Law : $I = \dfrac{\Delta V}{R}$

Concepts and Symbols

Current : Flow of electrical charge. Defined to be in direction *positive* charges move, towards lower potential.

Resistors : Resists the flow of current

Relates to potential through Ohm's Law.

Capacitors : Stores charge

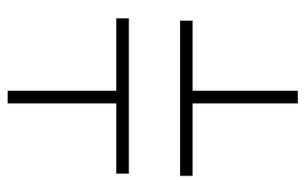

Relates to potential by capacitance :

$$Q = CV$$

Batteries : Supply constant voltage to a circuit

Series & Parallel Resistors

§ 10.2
Lecture 16

Series Circuit Elements

Circuit elements connected so current flows through them **sequentially**

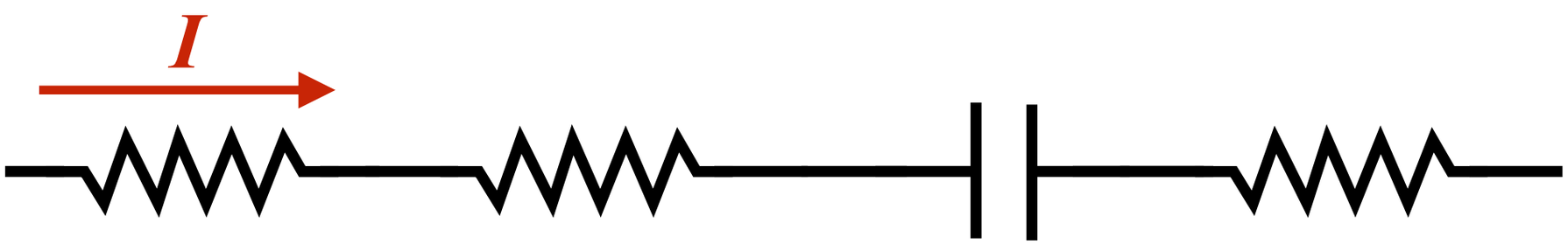

The **same amount** of current goes through each element (Kirchoff's Junction Rule).

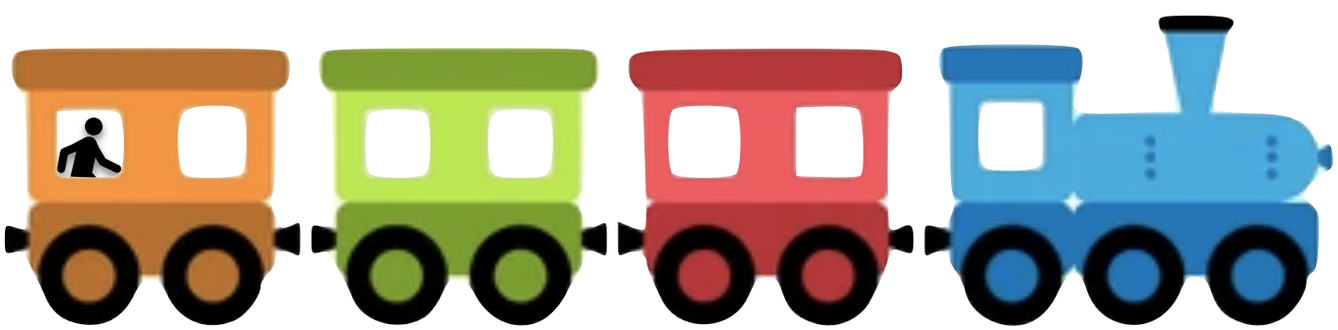

The current has nowhere else to go but forward

One Resistor

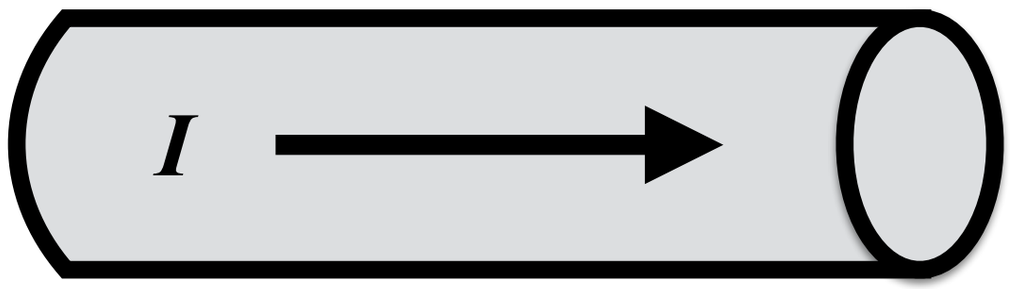

How does the resistance depend on the length of a resistor?

1. $R \propto L$
2. $R \propto 1/L$
3. $R \propto L^2$
4. $R \propto 1/L^2$
0. Don't wait on my response

$$R = \frac{\rho L}{A}$$

Two Resistors

Adding a second resistor in series acts like <u>lengthening</u> the resistor.

$$R = \frac{\rho L}{A} \longrightarrow R = \frac{\rho (L_1 + L_2)}{A}$$

$$R = \frac{\rho L_1}{A} + \frac{\rho L_2}{A}$$

$$R = R_1 + R_2$$

Many Resistors in Series

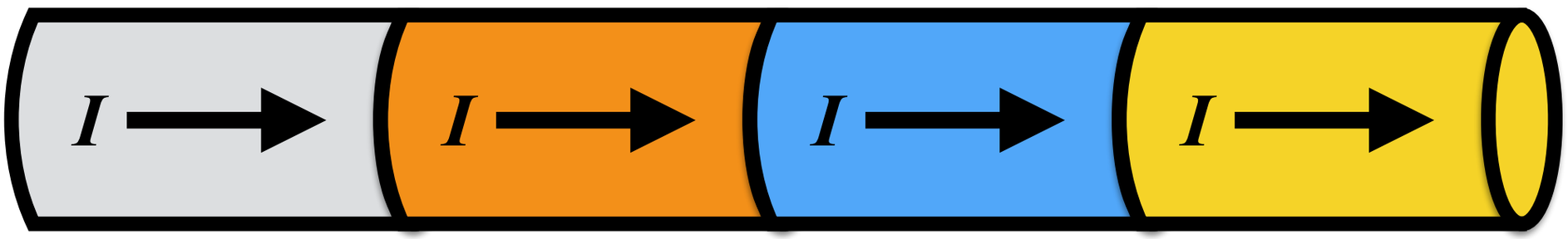

Resistors linked together in series act like a single resistor with resistance :

$$R_{eq} = R_1 + R_2 + R_3 + \ldots = \sum_i R_i$$

Called the *equivalent resistance*.

A series combination always has a larger resistance than any one of the resistors.

Many Resistors in Series

The Cubes!

We've seen this before!

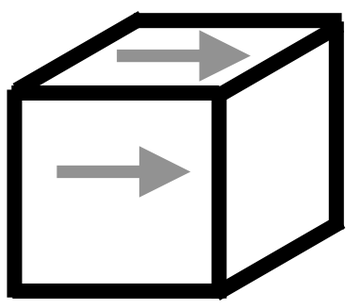

Length : L
Area : A

Resistance : R

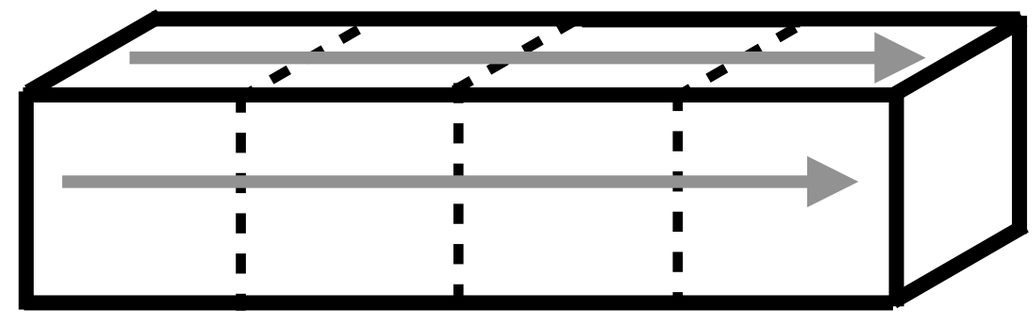

Length : 4L
Area : A

Resistance : 4R

Parallel Circuit Elements

Circuit elements connected so current flows through them **concurrently**

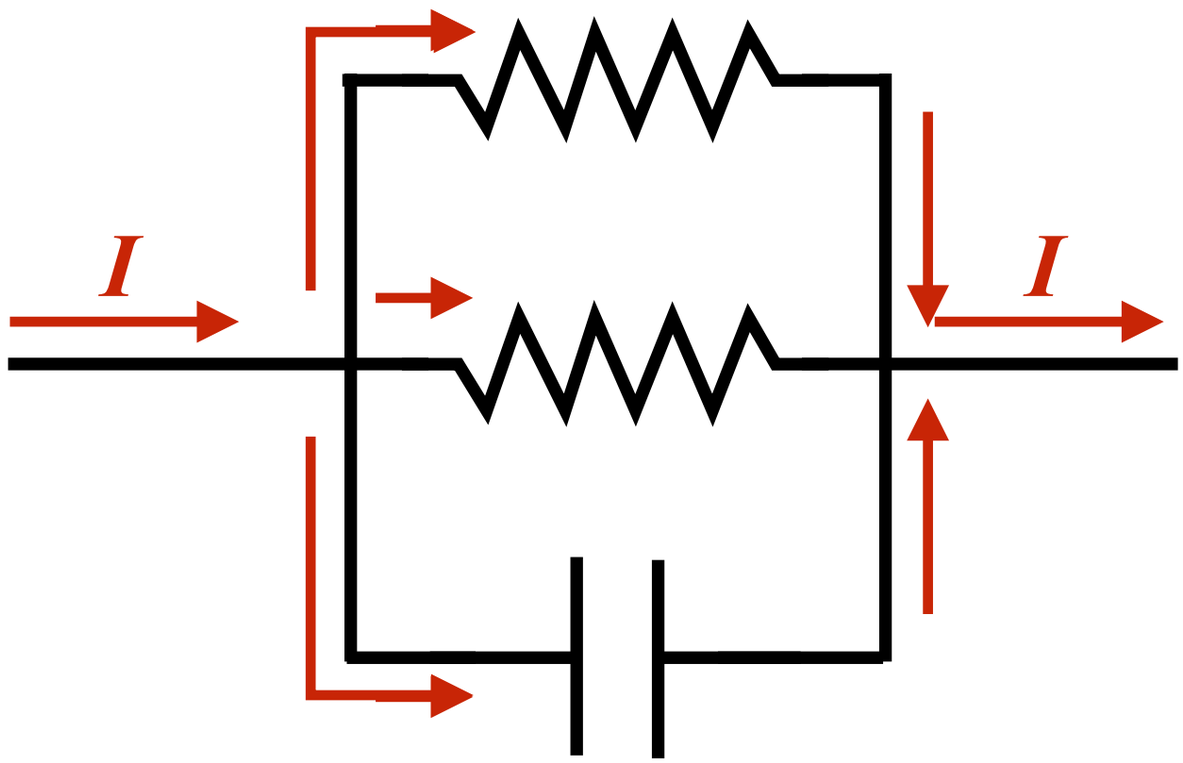

The voltage drop across each branch is the same (Kirchoff's Loop Rule).

Half-A-Resistor

If each of these have resistance 2R…

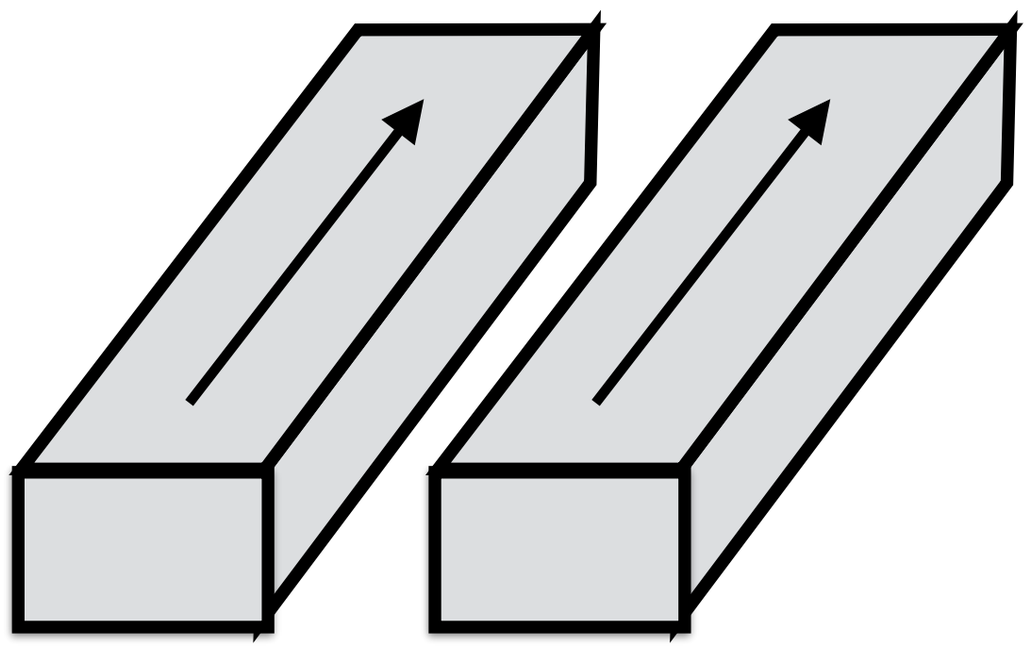

Combined they have resistance R.

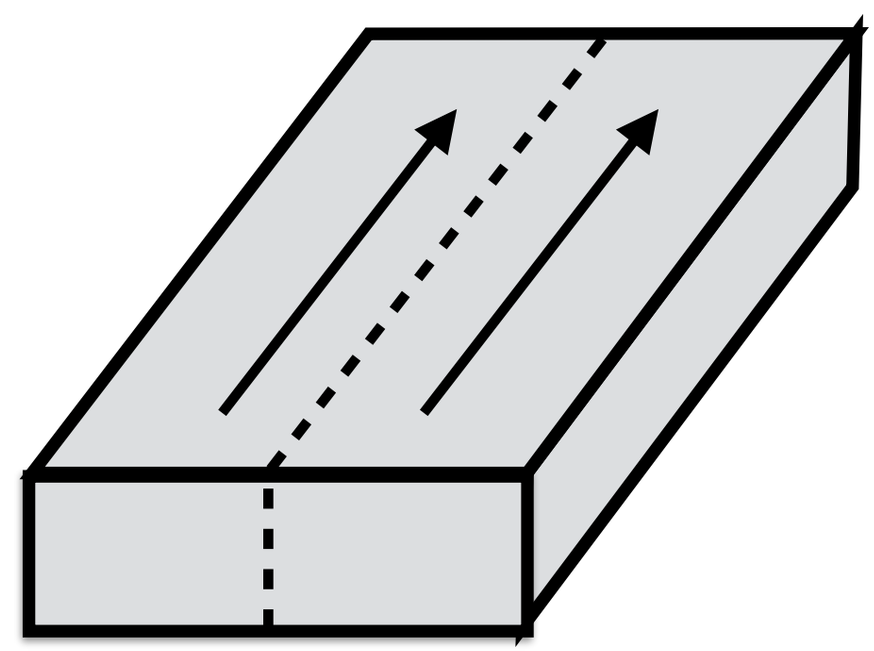

Adding a second resistor in parallel acts like <u>increasing the cross-sectional area</u> of the resistor.

$$R = \frac{\rho L}{A} \longrightarrow R = \frac{\rho L}{(A_1 + A_2)}$$

Many Resistors in Parallel

Resistors linked together in parallel act like a single resistor with equivalent resistance :

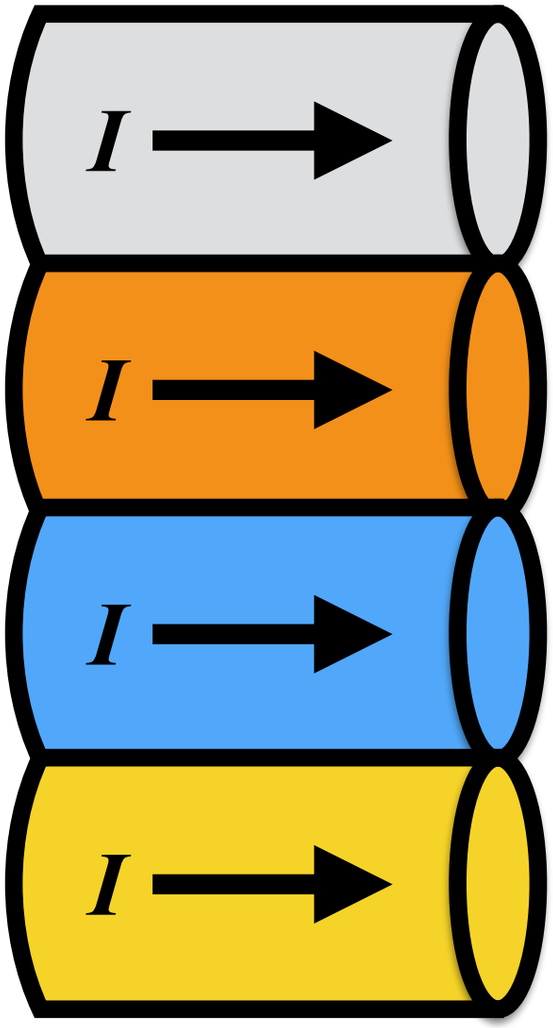

$$\frac{1}{R_{eq}} = \frac{1}{R_1} + \frac{1}{R_2} + \frac{1}{R_3} + \ldots = \sum_i \frac{1}{R_i}$$

A parallel combination always has a smaller resistance than any one of the resistors - always a larger area!

Many Resistors in Parallel

Example

What is the equivalent resistance of these parallel resistors?

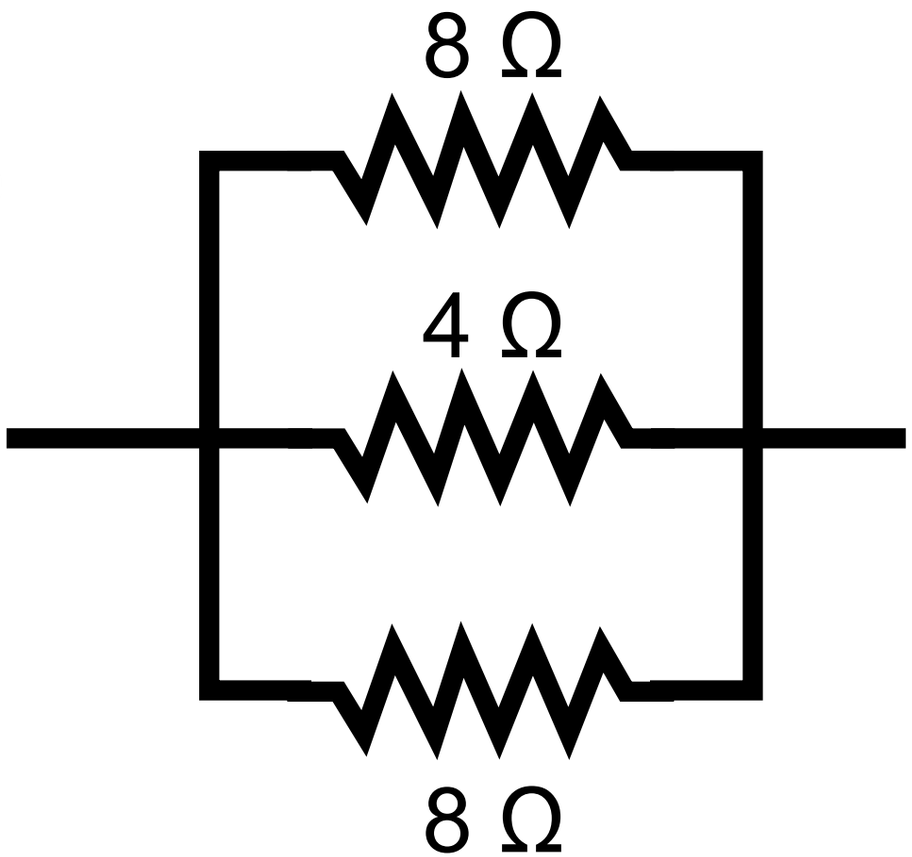

$$\frac{1}{R_{eq}} = \sum_i \frac{1}{R_i}$$

$$\frac{1}{R_{eq}} = \frac{1}{8} + \frac{1}{4} + \frac{1}{8} = \frac{1}{2}$$

$$\cancel{R_{eq} = \frac{1}{2}}$$

$$R_{eq} = \frac{1}{1/2} = 2\ \Omega$$

Remember to take the inverse of your sum to get R_{eq}.

“Special” Combinations

Identical Parallel Resistors

The equivalent resistance of N identical resistors in parallel is…

1. (N-1) × R
2. R / (N-1)
3. N^2 × R
4. R / N
5. R / N^2
0. Don’t wait on my response

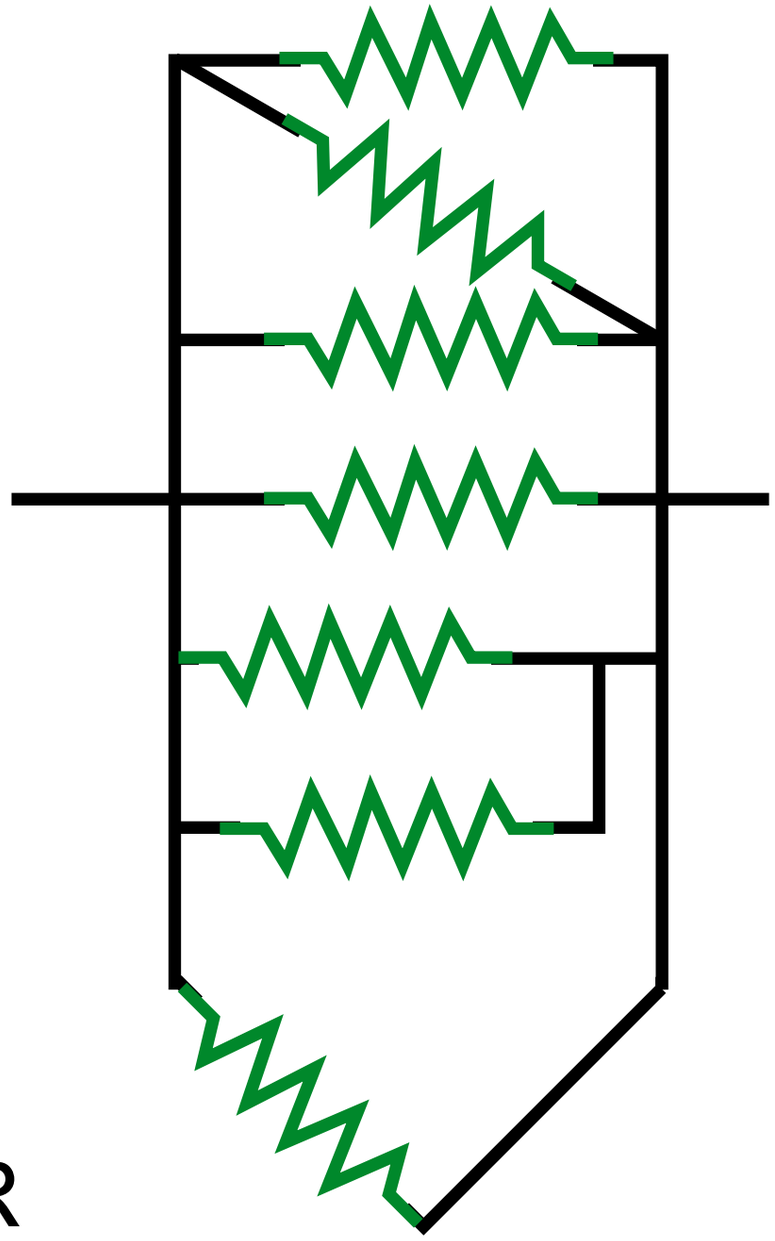

$$\frac{1}{R_{eq}} = \sum_i \frac{1}{R_i} = \sum_i \frac{1}{R} = \frac{N}{R} \longrightarrow R_{eq} = \frac{R}{N}$$

Many Resistors in Parallel

The Cubes!

We've seen this before!

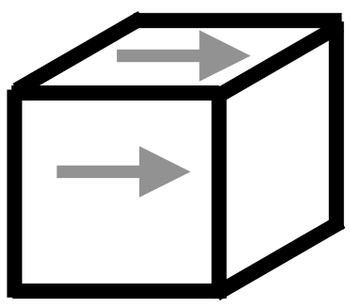

Length : L
Area : A

Resistance : R

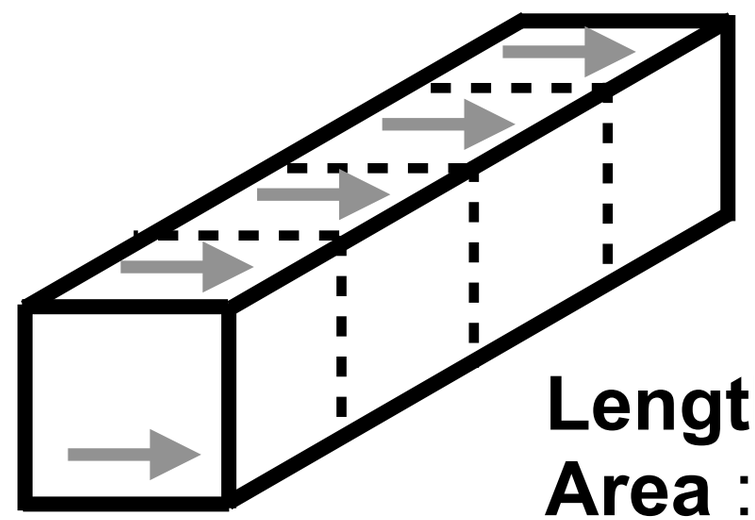

Length : L
Area : 4A

Resistance : R/4
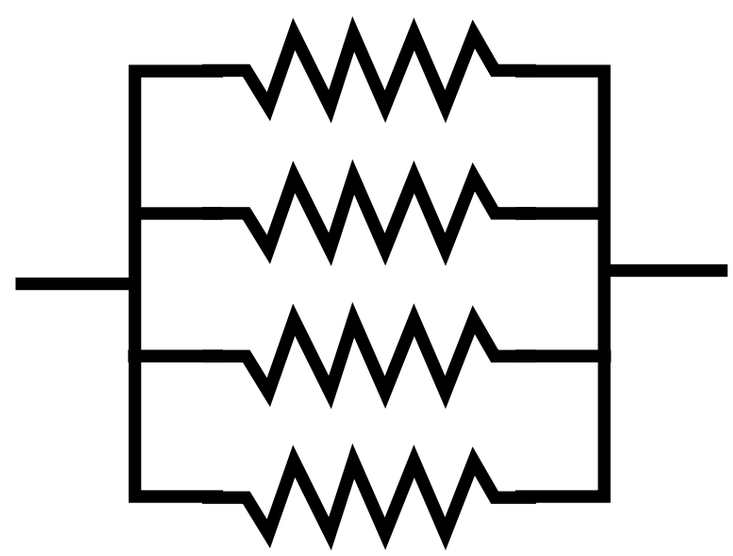
R