July 27, 2023

Reflection 5 : Due Friday by midnight

Conceptual HW 5 : Due Sunday by midnight

Lab : Tuesday

Written HW 5 : Due Tuesday by midnight

Office Hours

Mondays Noon-2pm
Thursdays 2-3pm

	Monday	Tuesday	Wednesday	Thursday	Friday
Week 5	July 24 V2 CH 9	July 25 Homework 4 Lab W5 - Potential & Field	July 26 V2 CH 9	July 27 V2 CH 10 Studio : Ohm's Law	July 28 V2 CH 10 Reflection
Week 6	July 31 V2 CH 10	Aug 1 Homework 5 Lab W6 - Resistivity	Aug 2 V2 CH 11	Aug 3 V2 CH 12 Studio : Circuits	Aug 4 Reflection Quiz 3&4: CH 8-10
Week 7	Aug 7 V2 CH 12	Aug 8 Homework 6 Lab W7 - DC Circuits	Aug 9 V2 CH 13	Aug 10 V2 CH 13 Studio : Magnetism	Aug 11 V2 CH 14 Reflection

Chapter 10

DC Circuits

Resistor Circuit Analysis

§ 10.3
Lecture 17

Double Batteries

Which of these loop rule equations are correct for this circuit? Assume **current** is clockwise.

1. $+ V_1 + IR + V_2 = 0$
2. $- V_1 + IR + V_2 = 0$
3. $+ V_1 + IR - V_2 = 0$
4. $+ V_1 - IR + V_2 = 0$
5. $+ V_1 - IR - V_2 = 0$
0. Don't wait on my response

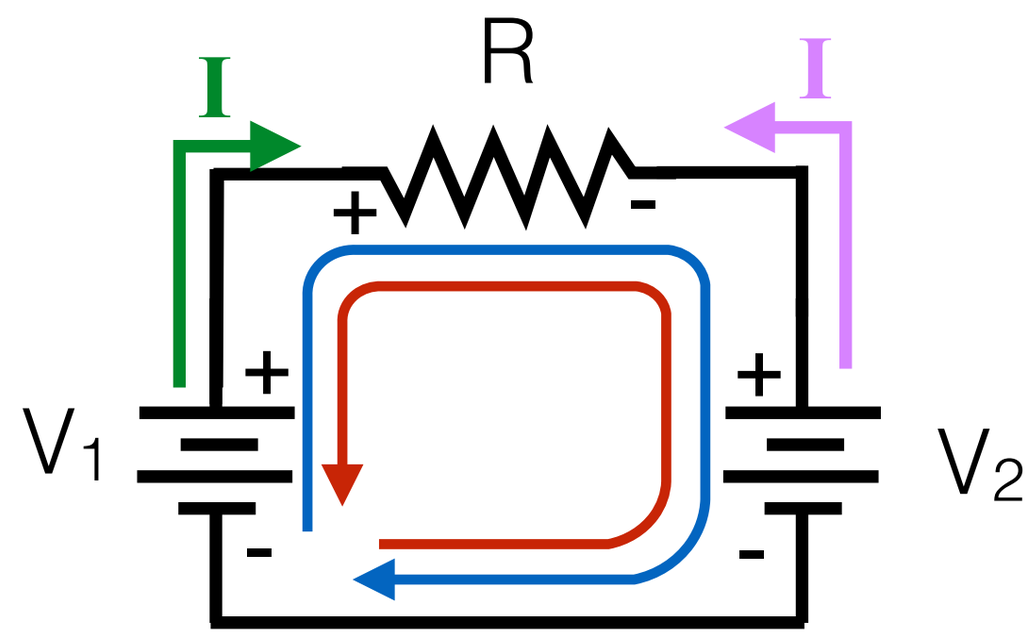

$$+ V_1 - V_2 = IR$$

$$\frac{V_1 - V_2}{R} = I$$

$V_1 > V_2 \rightarrow I$ is positive

$V_1 < V_2 \rightarrow I$ is negative

Current would be counter-clockwise

Solving Complex Circuits

1. **Draw** (guess) direction of **currents** in each part of the circuit. Name the currents.
2. **Label sides** of circuit elements (resistors, capacitors) with a high-voltage and low-voltage side
3. Use Kirchoff's **Loop Rule** to write equations for the voltage sum around each loop in the circuit.
4. Use Kirchoff's **Junction Rule** to write equations for the currents at each junction
5. Use **Ohm's law** to relate currents and voltages (or capacitance definition to relate current & charge)
6. **Solve** your system of equations (or differential equation!)

Starting A Car

Car batteries have an EMF of 12.6V and the engine's starter has a resistance of 0.025Ω. The car needs 250A of current to start.

The **dead battery** of a car has an internal resistance of 0.045Ω.

What is the current in the starter when you try to start the car?

$$\mathcal{E}_1 - I\, r_1 - I\, R_S = 0$$

$$\mathcal{E}_1 - I\,(r_1 + R_S) = 0$$

$$12.6 - I\,(0.045 + 0.025) = 0$$

$$12.6 - I\,(0.070) = 0$$

$$I = 180\ \text{A}$$

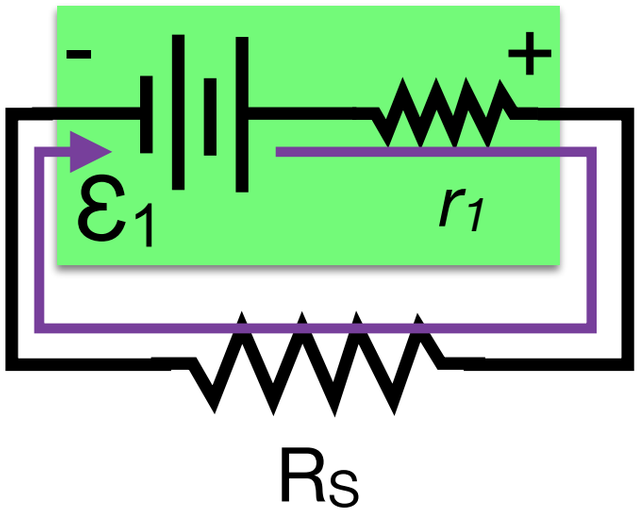

(Jump) Starting A Car

Car batteries have an EMF of 12.6V and the engine's starter has a resistance of 0.025Ω. The car needs 250A of current to start.

The **dead battery** of a car has an internal resistance of 0.045Ω.

Another battery is added as shown:

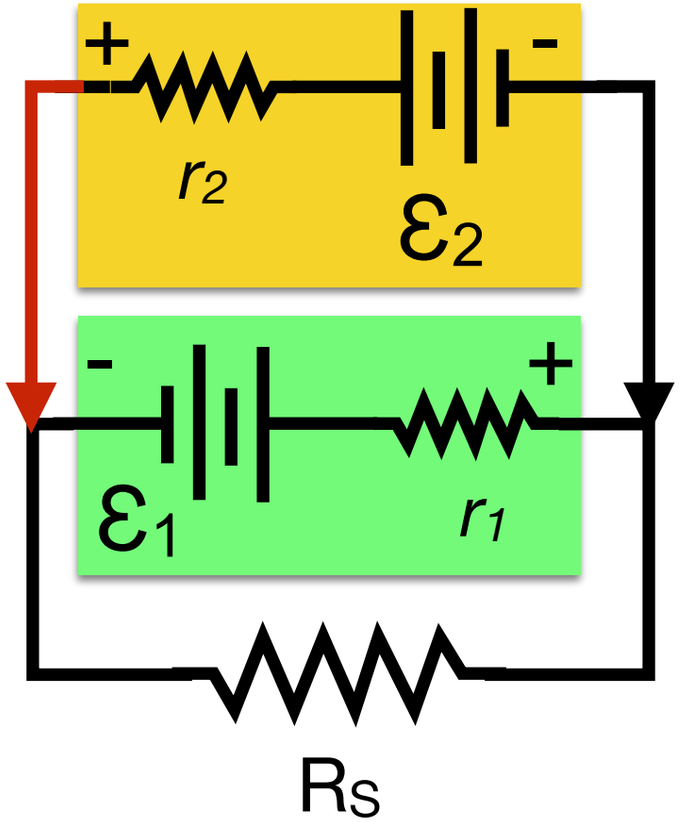

The new battery has an internal resistance of 0.010Ω.

What is the current through the starter now?

(Jump) Starting A Car

Labeling

1. **Draw Currents**

   Guess direction and name them

2. **Label Sides**

   Label high / low voltages

   Batteries have set high and low sides

   Current goes through resistors from high to low

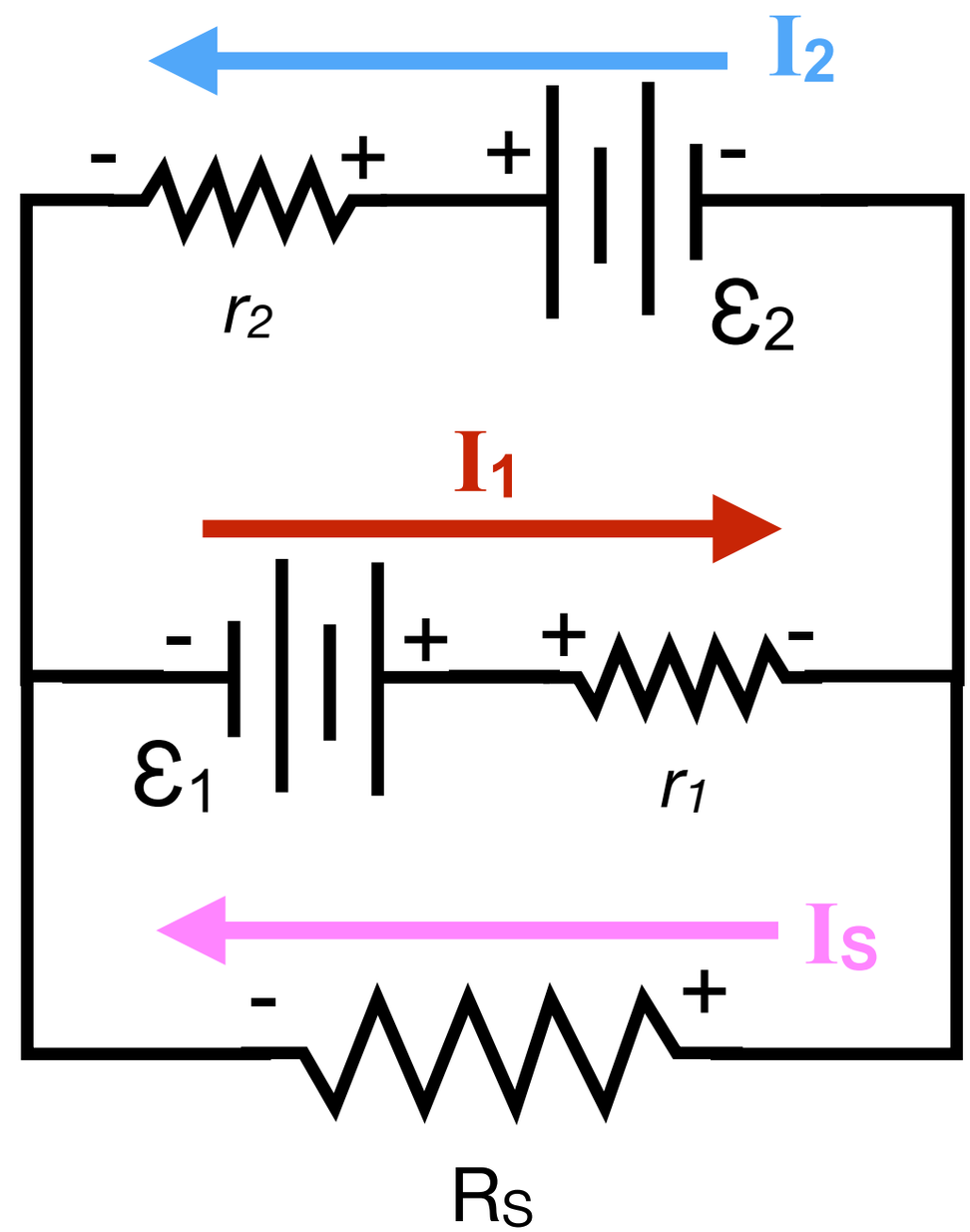

(Jump) Starting A Car

Kirchoff's Laws

3. **Loop Rule**

$$\Delta V_{loop} = \sum_i \Delta V_i = 0$$

Top

$$+ \mathcal{E}_2 - \Delta V_2 + \mathcal{E}_1 - \Delta V_1 = 0$$

Bottom

Left

$$+ \Delta V_1 - \mathcal{E}_1 + \Delta V_S = 0$$

Outer

$$+ \mathcal{E}_2 - \Delta V_2 + \Delta V_S = 0$$

Right

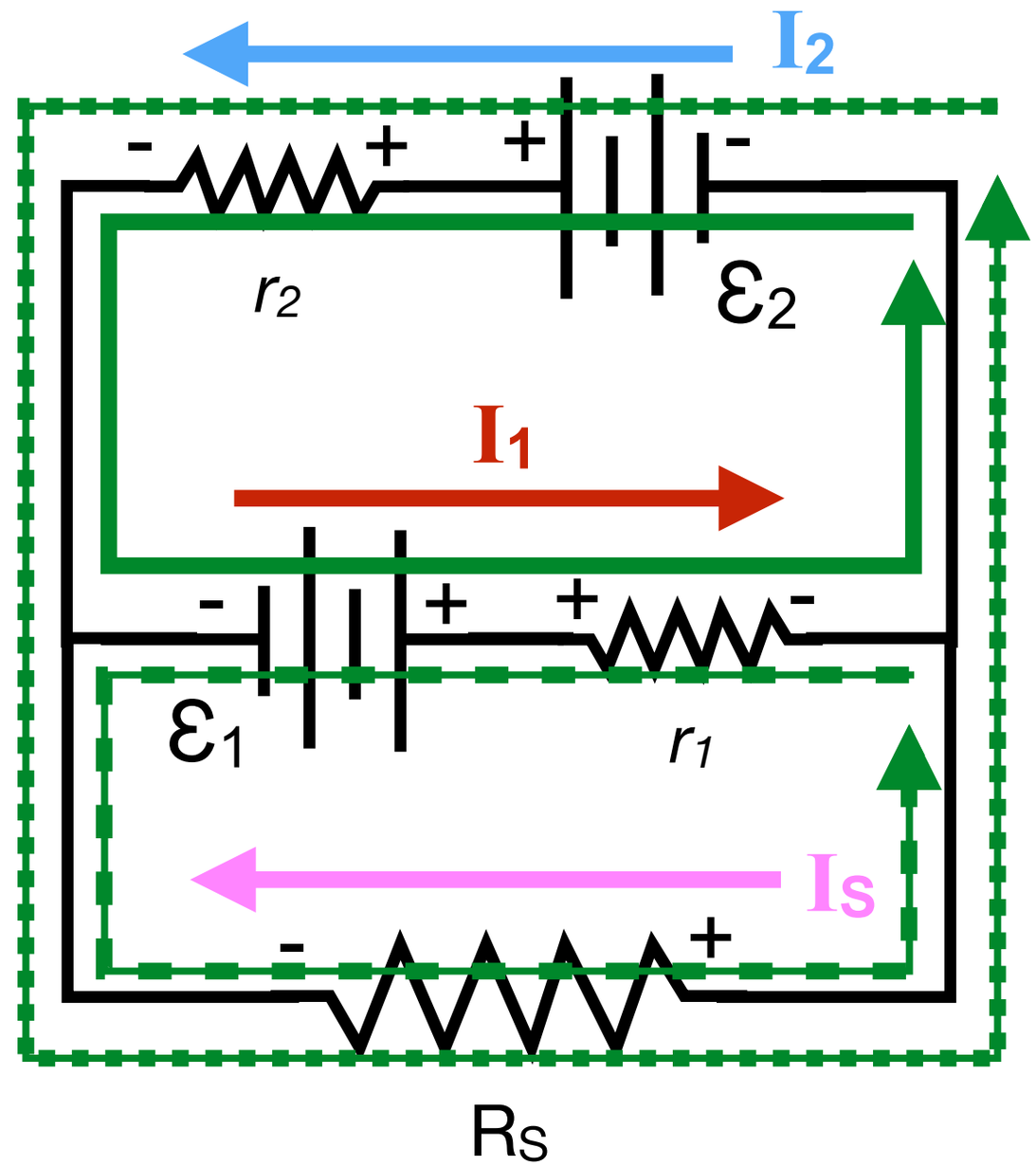

4. **Junction Rule**

$$I_2 + I_S = I_1$$

(Jump) Starting A Car

Current Equations

5. **Ohm's Law**

$$\Delta V = I R$$

Use the appropriate current going through each resistor

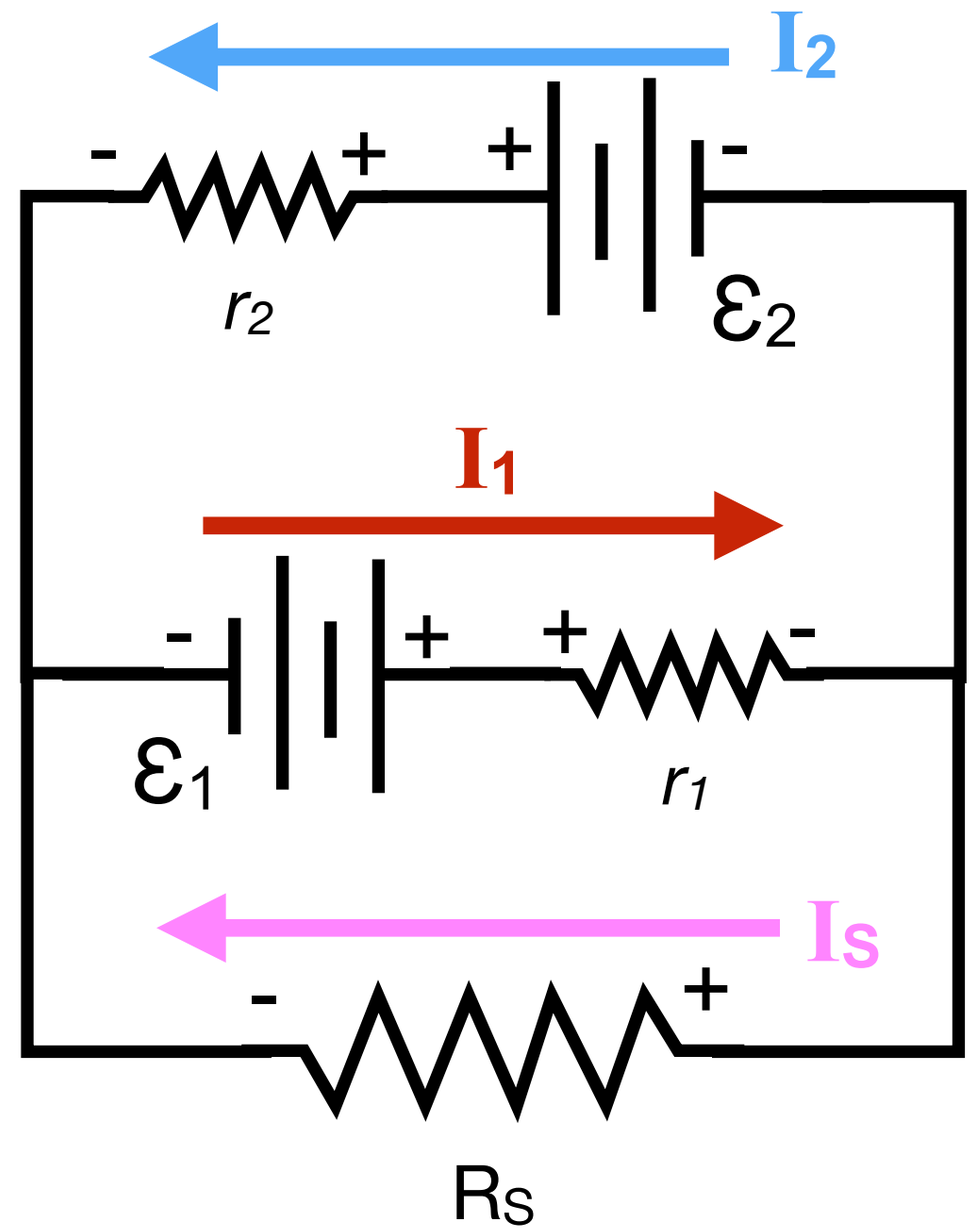

$$+ \mathcal{E}_2 - I_2 r_2 + \mathcal{E}_1 - I_1 r_1 = 0$$

$$+ I_1 r_1 - \mathcal{E}_1 + I_s r_s = 0$$

$$+ \mathcal{E}_2 - I_2 r_2 + I_s r_s = 0$$

$$I_2 + I_S = I_1$$

6. **Solve**

What is the current through the starter now?

$\mathcal{E}_1 = \mathcal{E}_2 = 12.6V$ $\quad R_s = 0.025\Omega$

$r_1 = 0.045\Omega$

$r_2 = 0.010\Omega$

(Jump) Starting A Car

Solution

$$+12.6 - I_2(0.01) + 12.6 - I_1(0.045) = 0$$

$$I_1(0.045) - 12.6 - I_S(0.025) = 0$$

$$+12.6 - I_2(0.01) + I_S(0.025) = 0$$

$$I_2 + I_S = I_1$$

$$I_1 = 280 + 0.55\, I_S$$

$$I_2 = 1260 + 2.5\, I_S$$

$$I_S = -330\text{A}$$

Wrong direction for I_S!

(Jump) Starting A Car

Be careful!

Connecting + to - between the batteries sends current through the starter in the **wrong direction**.

It can damage your car!

Connect + to + and - to -

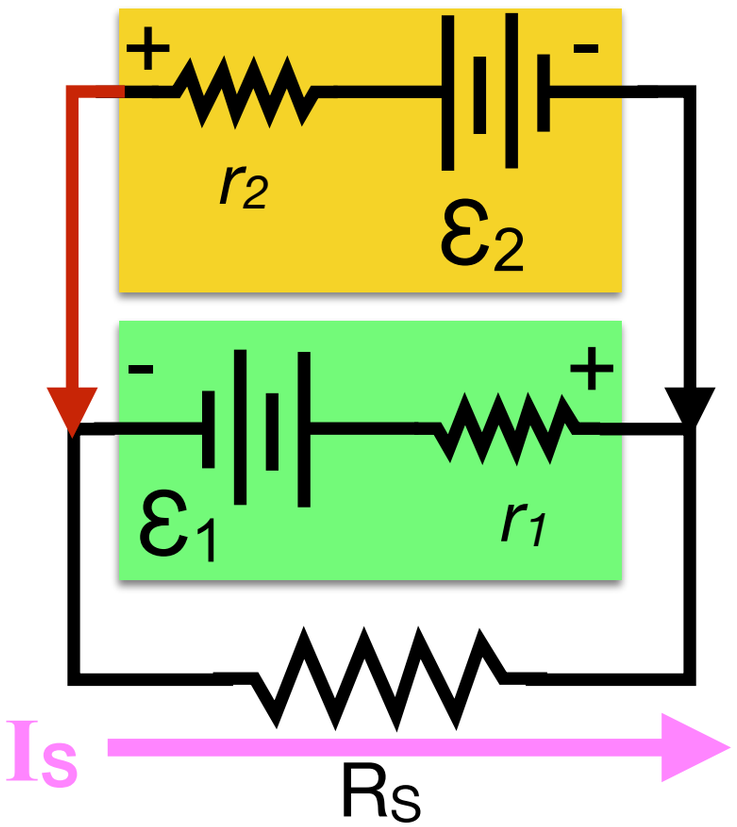

(Jump) Starting A Car

Be careful!

Connecting + to - between the batteries sends current through the starter in the **wrong direction**.

It can damage your car!

Connect + to + and - to -

Repeat the calculation with correct battery connections.

I_S = 340A

The motor starts!

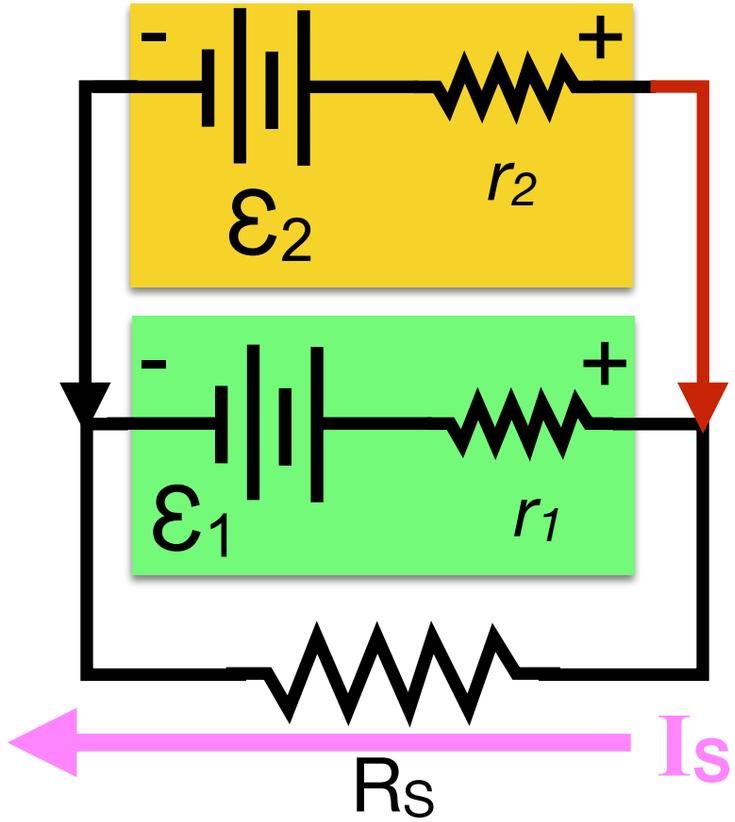

(Jump) Starting A Car

Correct Battery Arrangement Solution

$$+ 12.6 - I_2(0.01) + I_1(0.045) - 12.6 = 0$$ *Top loop*

$$+ 12.6 - I_1(0.045) - I_S(0.025) = 0$$ *Bottom loop*

$$+ 12.6 - I_2(0.01) - I_S(0.025) = 0$$ *Outer loop*

$$I_1 + I_2 = I_S$$ *Junctions*

$$I_1 = 280 - I_S(0.55)$$

$$I_2 = 1260 - 2.5\, I_S$$

$$I_S = 340\text{A}$$

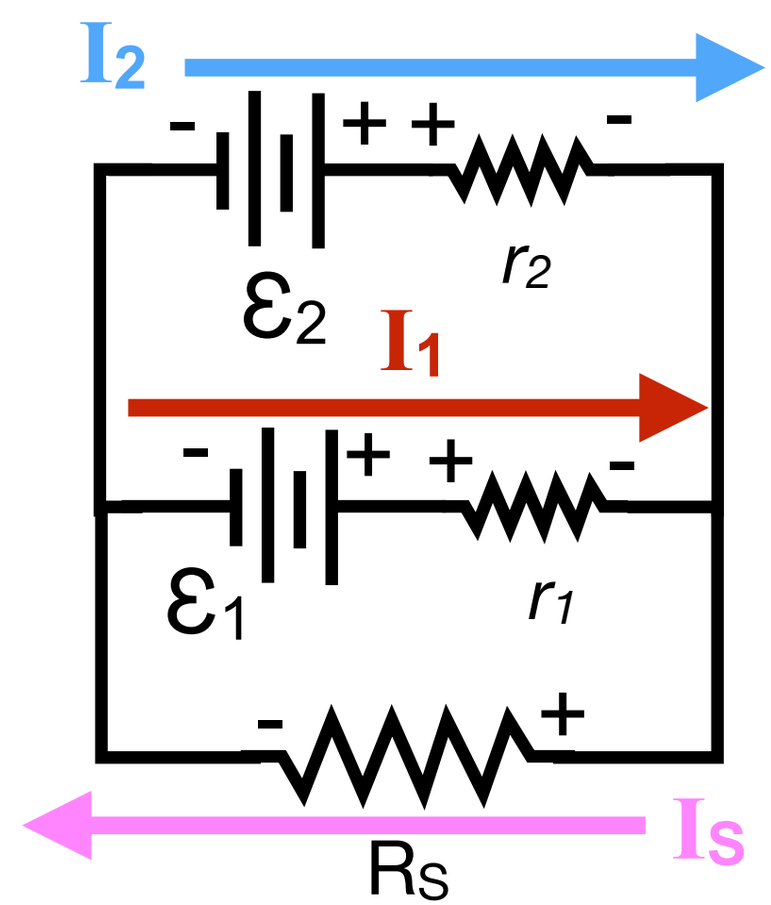

Pre-class Slides

Resistor Circuit Analysis

§ 10.3
Lecture 17

Youtube Playlist

Complex Circuits

In circuits with multiple batteries, capacitor and resistors, you can't always just fold to single elements.

Instead, use Kirchoff's Laws (and other knowledge) to write a *system of equations* to solve.

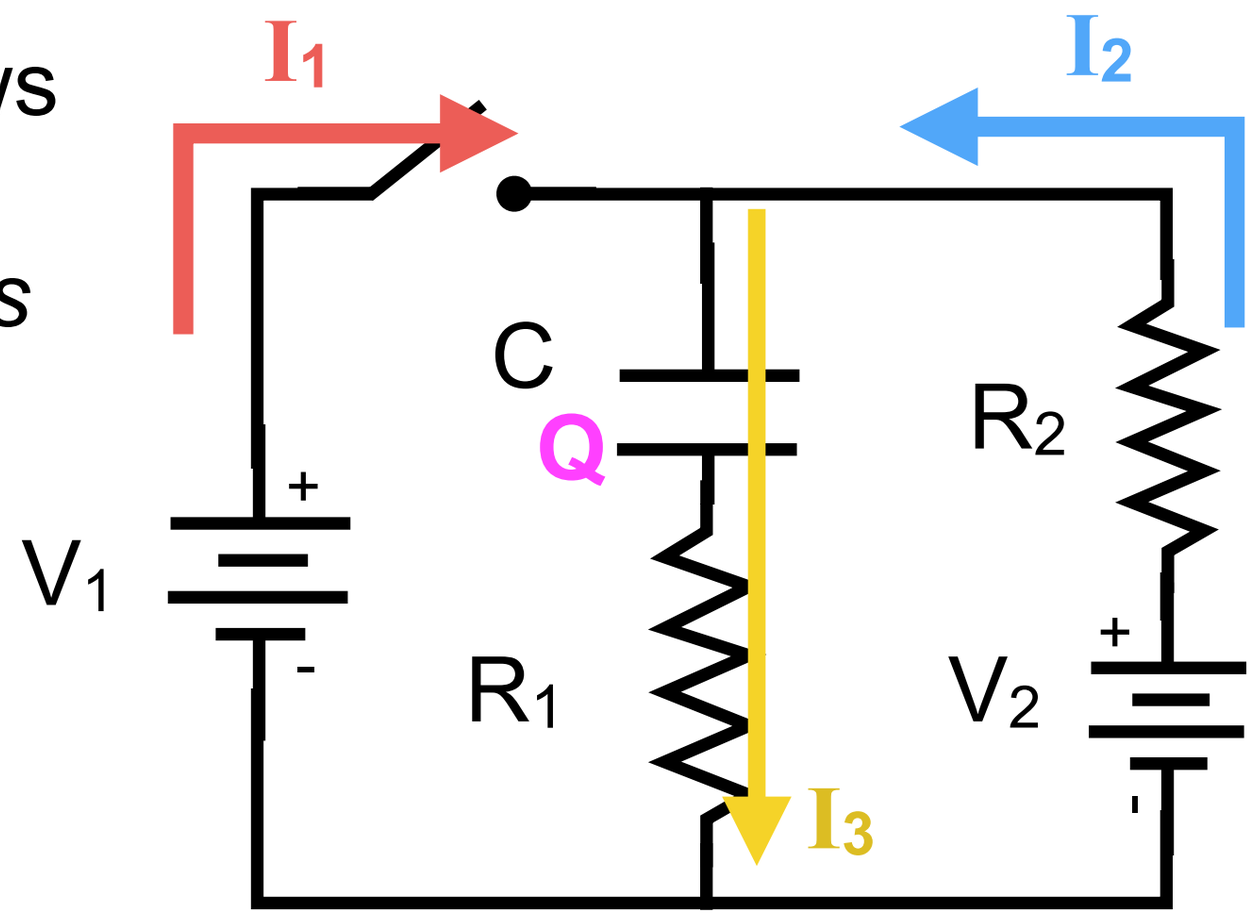

4 unknowns.

We need 4 equations.

Solving Complex Circuits

1. **Draw** (guess) direction of **currents** in each part of the circuit. Name the currents.
2. **Label sides** of circuit elements (resistors, capacitors) with a high-voltage and low-voltage side
3. Use Kirchoff's **Loop Rule** to write equations for the voltage sum around each loop in the circuit.
4. Use Kirchoff's **Junction Rule** to write equations for the currents at each junction
5. Use **Ohm's law** to relate currents and voltages (or capacitance definition to relate current & charge)
6. **Solve** your system of equations (or differential equation!)

Complex Circuit Example

What is the voltage dropped across resistor R_C?

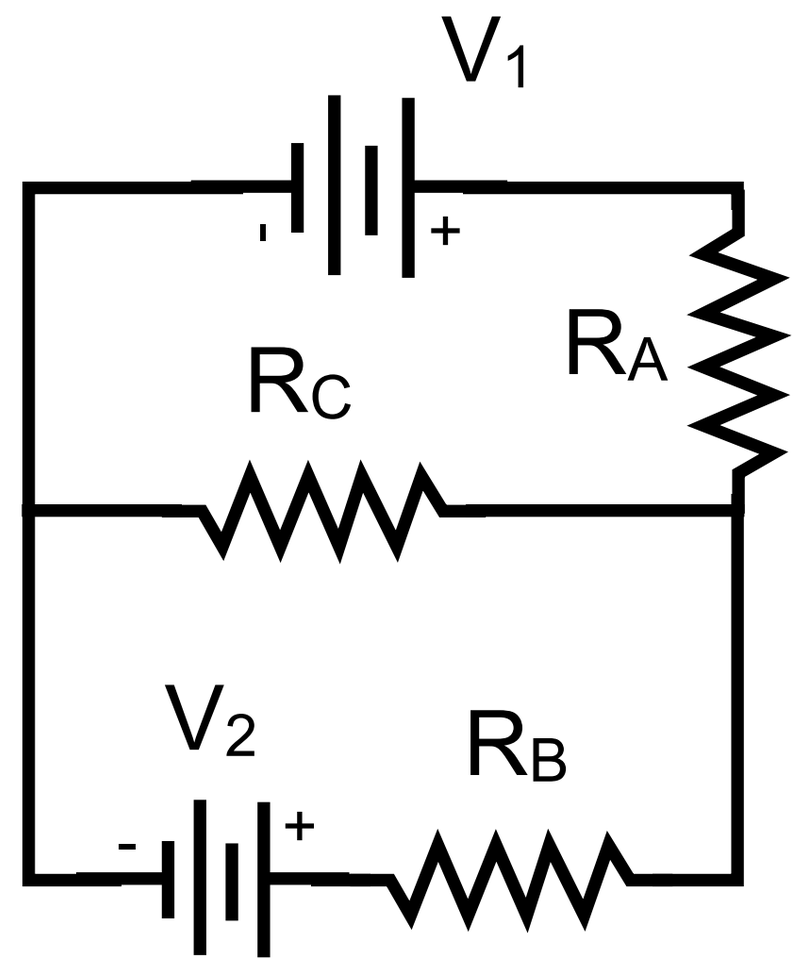

Complex Circuit Example

Draw Currents

What is the voltage dropped across resistor R_C?

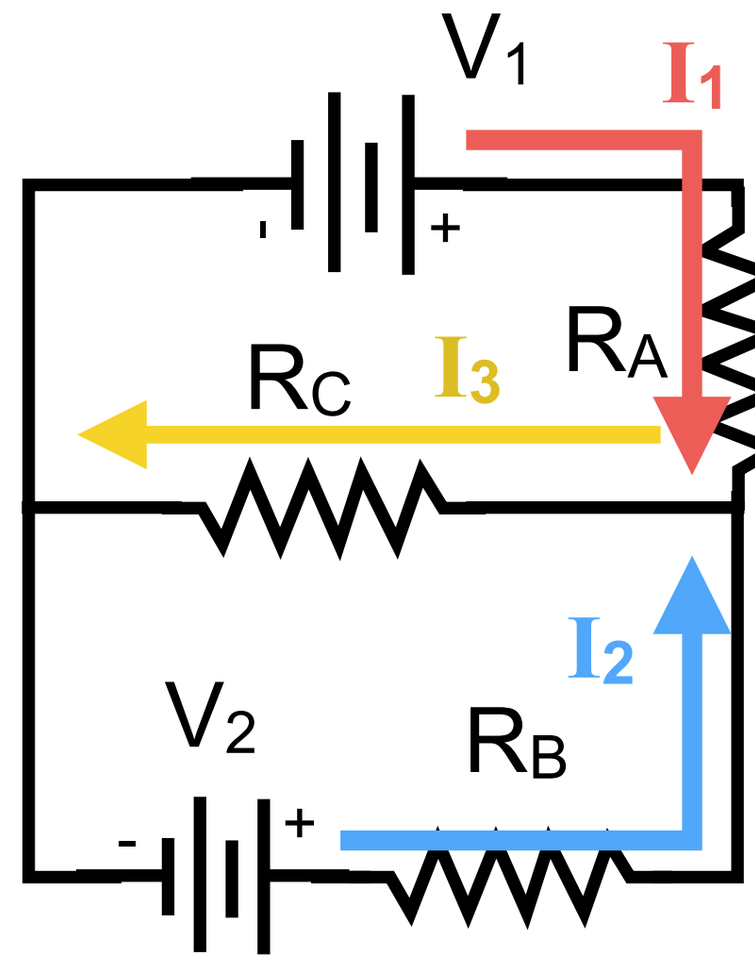

1. Draw Currents

Which way do you think current flows through R_C?

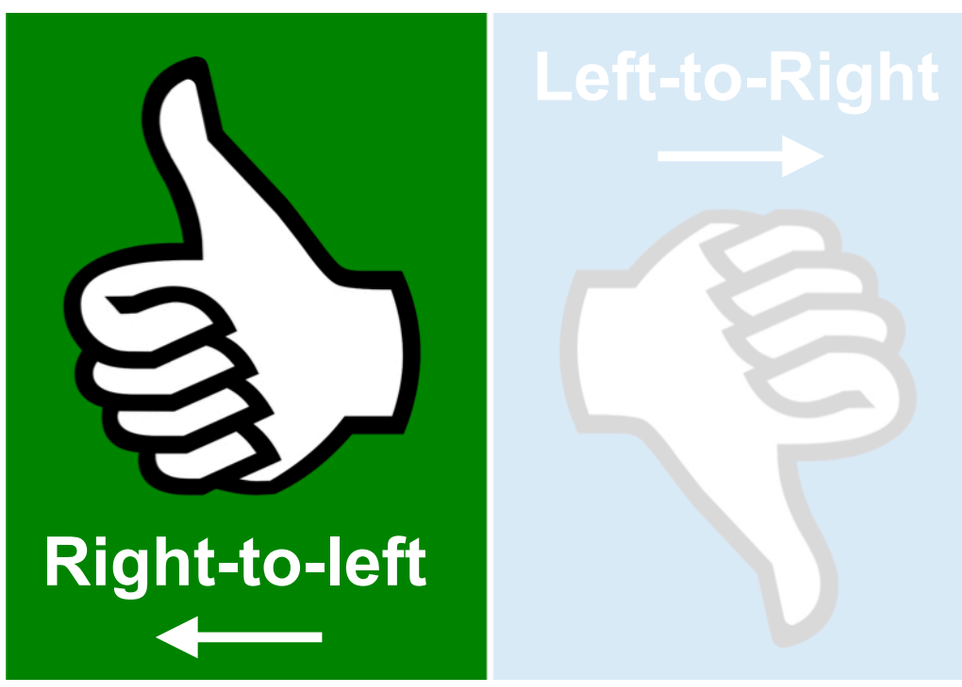

0. Don't wait on my response

Complex Circuit Example

Label Elements

What is the voltage dropped across resistor R_C?

2. Label sides

Batteries have defined + and - sides

Current flows + → - through resistors

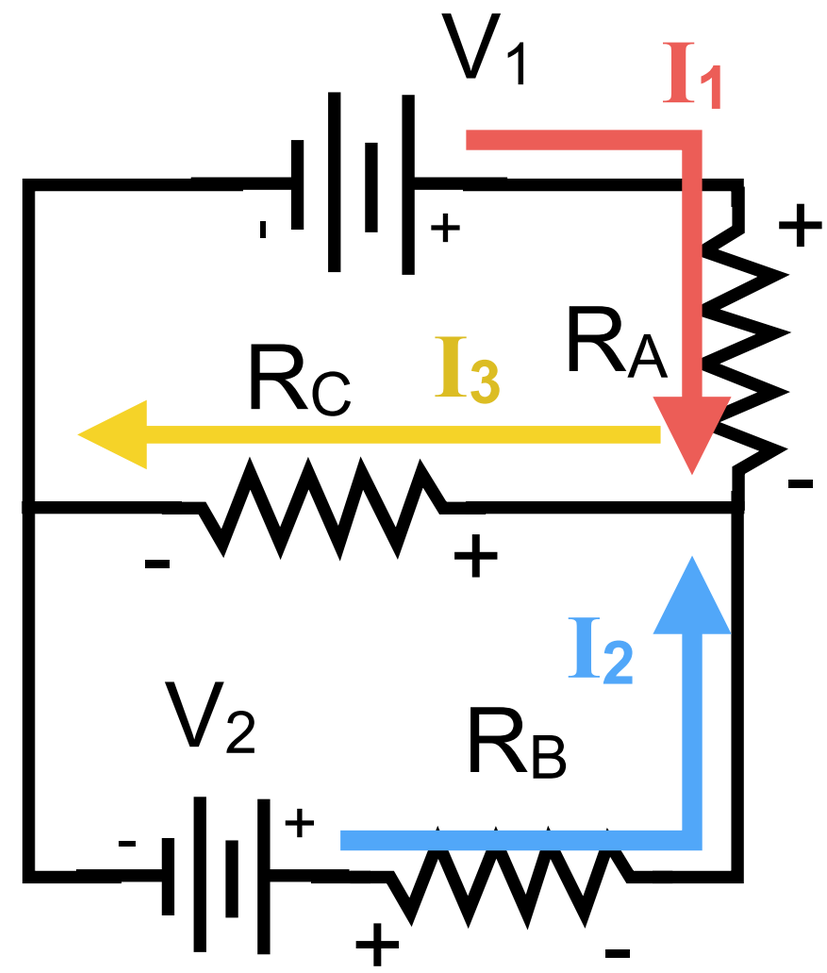

Complex Circuit Example

Loop Rule

What is the voltage dropped across resistor R_C?

3. Loop Rule

For each loop, "walk" around it, keeping track of increases and decreases in voltage.

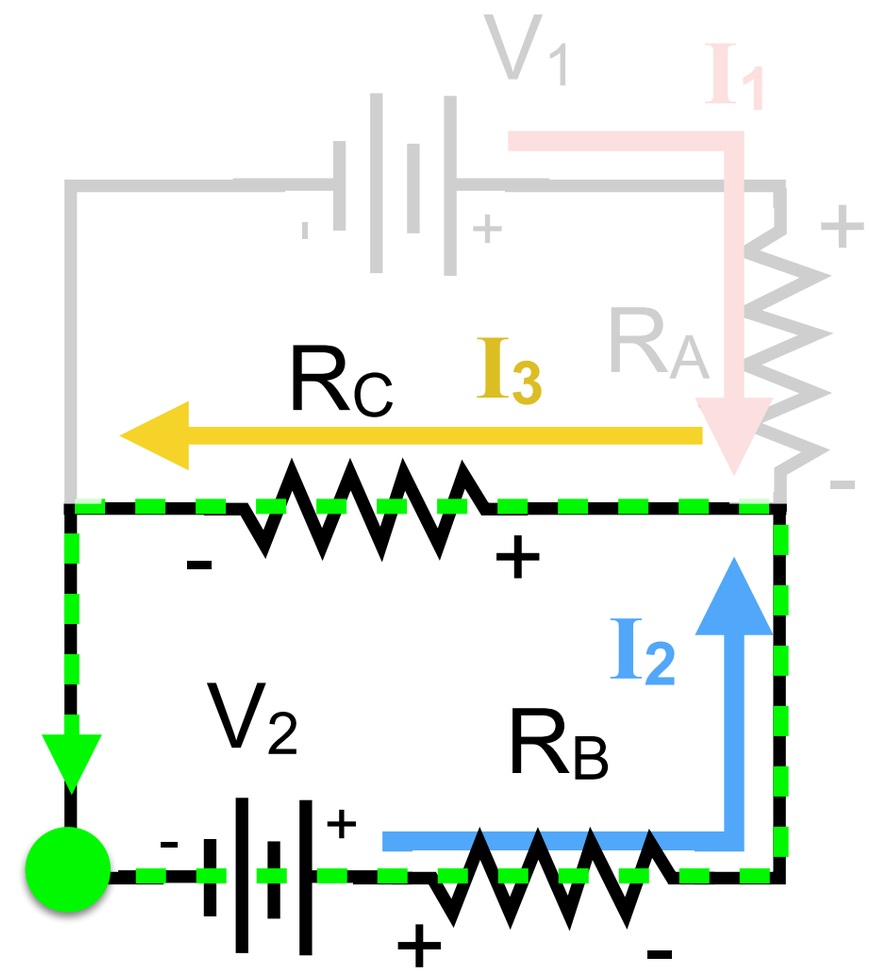

Bottom: $+ V_2 - \Delta V_{RB} - \Delta V_{RC} = 0$

Complex Circuit Example

Loop Rule 2

What is the voltage dropped across resistor R_C?

3. Loop Rule

For each loop, "walk" around it, keeping track of increases and decreases in voltage.

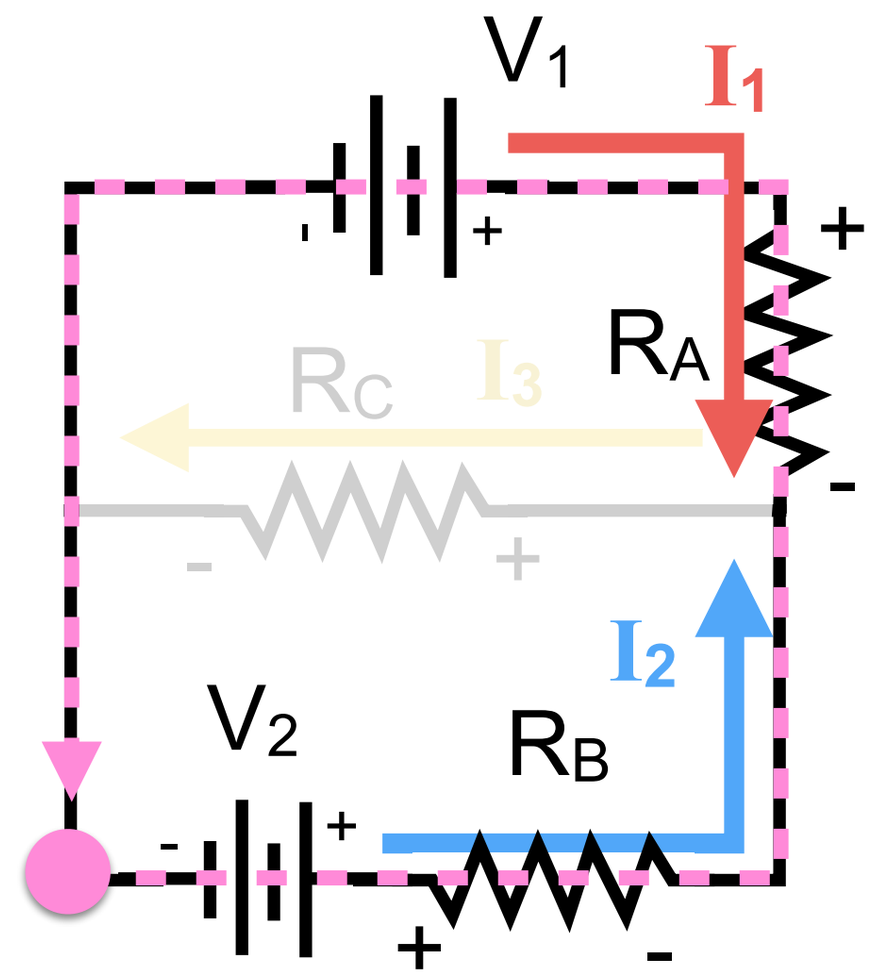

Bottom: $+ V_2 - \Delta V_{RB} - \Delta V_{RC} = 0$

Outer: $+V_2 - \Delta V_{RB} + \Delta V_{RA} - V_1 = 0$

Complex Circuit Example

Loop Rule 3

What is the voltage dropped across resistor R_C?

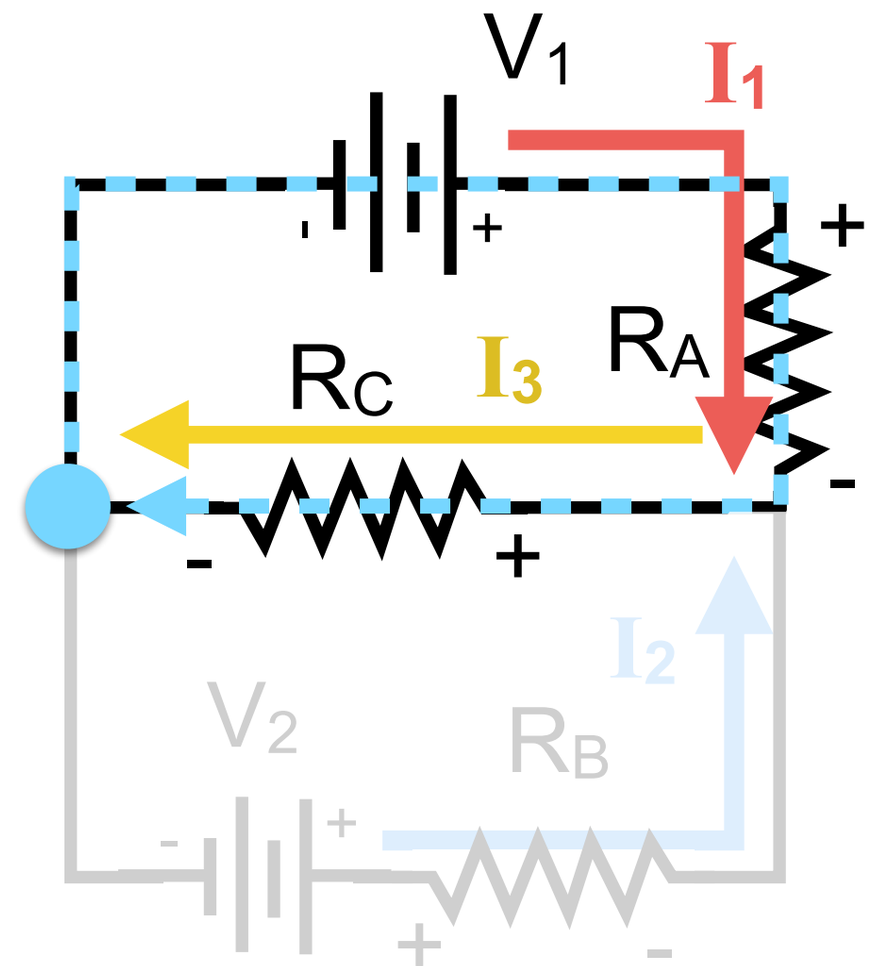

3. Loop Rule

What is the Loop Rule equation for the top loop, going clockwise around the loop?

1. $+V_1 + \Delta V_{RA} + \Delta V_{RC} = 0$
2. $+V_1 + \Delta V_{RA} - \Delta V_{RC} = 0$
3. $+V_1 - \Delta V_{RA} - \Delta V_{RC} = 0$
4. $+V_1 - \Delta V_{RA} + \Delta V_{RC} = 0$
5. $-V_1 + \Delta V_{RA} + \Delta V_{RC} = 0$

$+V_1 - \Delta V_{RA} - \Delta V_{RC} = 0$

Counter-clockwise

Complex Circuit Example

All Loop Rules

What is the voltage dropped across resistor R_C?

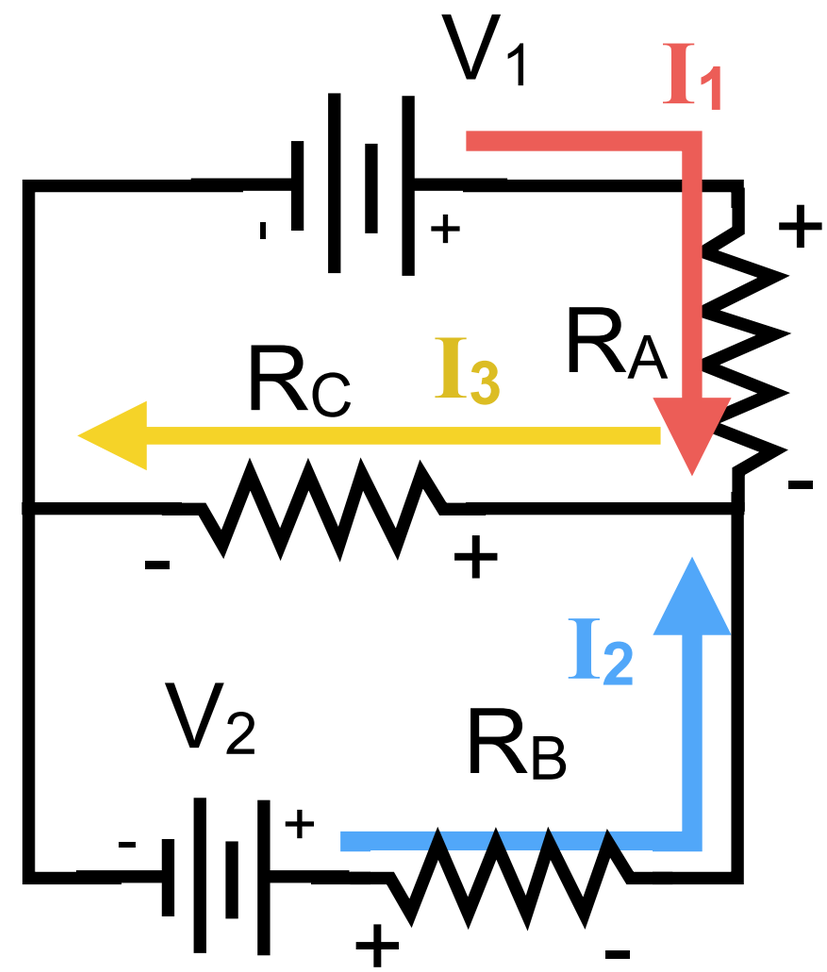

3. Loop Rule

For each loop, "walk" around it, keeping track of increases and decreases in voltage.

Bottom: $+ V_2 - \Delta V_{RB} - \Delta V_{RC} = 0$

Outer: $+V_2 - \Delta V_{RB} + \Delta V_{RA} - V_1 = 0$

Top: $+V_1 - \Delta V_{RA} - \Delta V_{RC} = 0$

Complex Circuit Example

Junction Rule

What is the voltage dropped across resistor R_C?

4. Junction Rule

Which relation relates the currents at this junction?

1. $I_1 = I_2 + I_3$
2. $I_2 = I_1 + I_3$
3. $I_3 = I_1 + I_2$

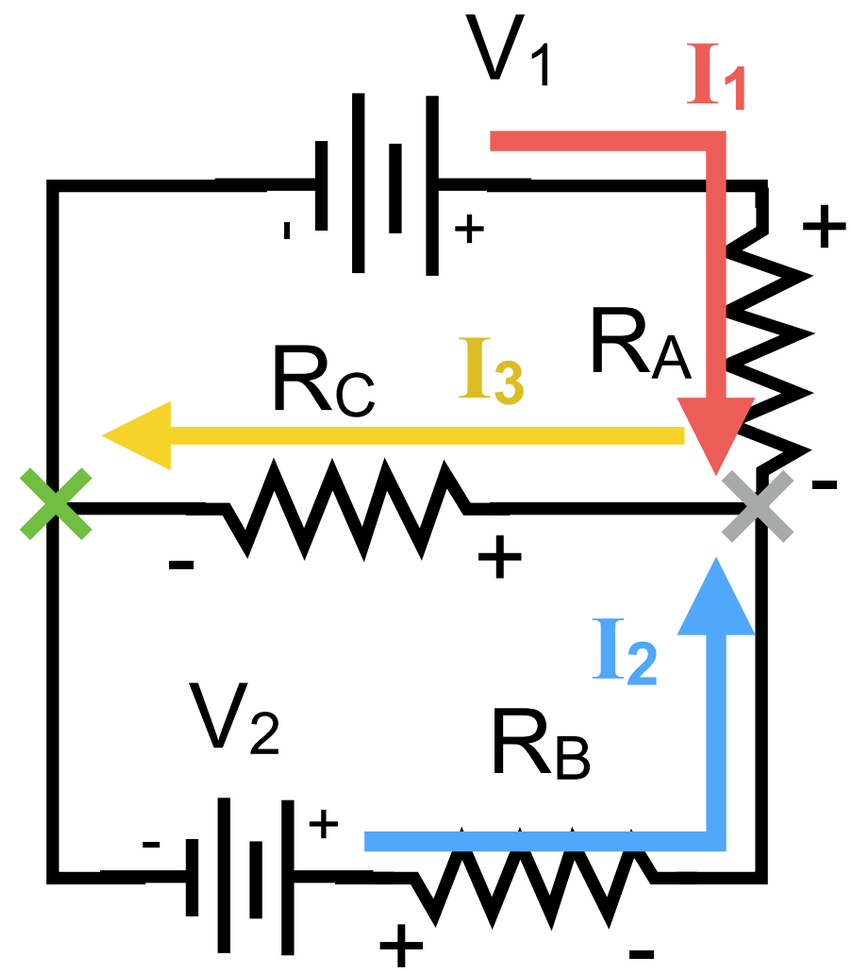

$I_3 = I_1 + I_2$

Complex Circuit Example

Ohm's Law

What is the voltage dropped across resistor R_C?

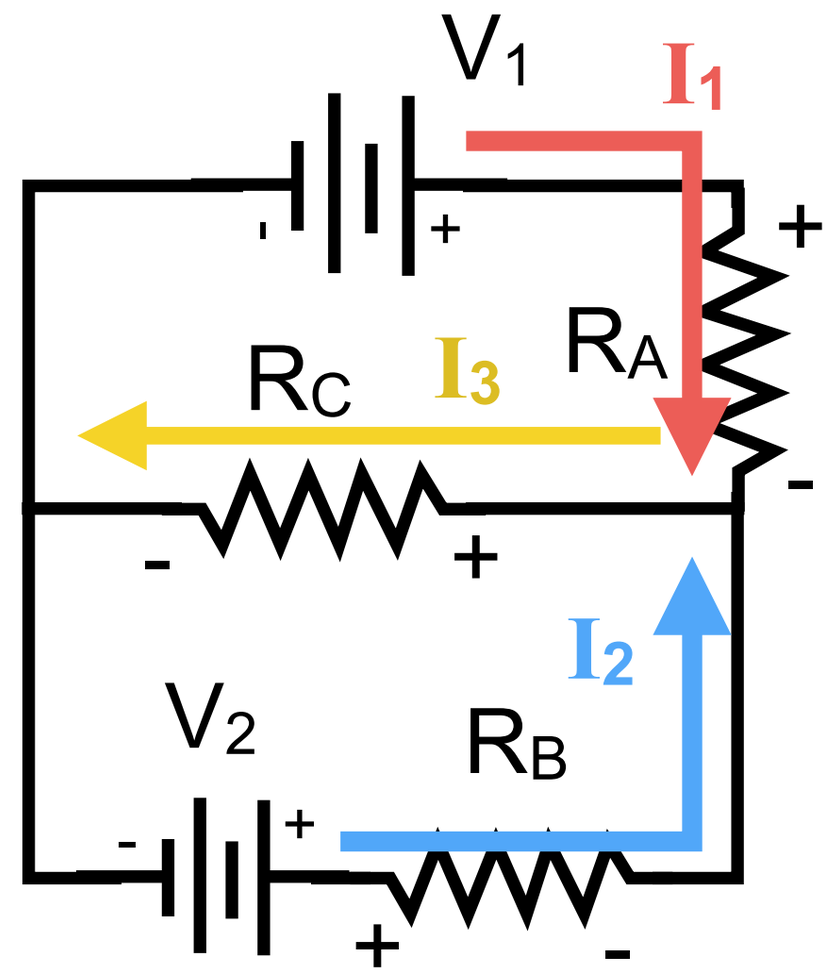

5. Ohm's Law

Easiest to solve if re-write voltages in terms of current.

$$+ V_2 - I_2 R_B - I_3 R_C = 0$$

$$+V_2 - I_2 R_B + I_1 R_A - V_1 = 0$$

$$+V_1 - I_1 R_A - I_3 R_C = 0$$

$$I_3 = I_1 + I_2$$

Complex Circuit Example

Solve

What is the voltage dropped across resistor R_C?

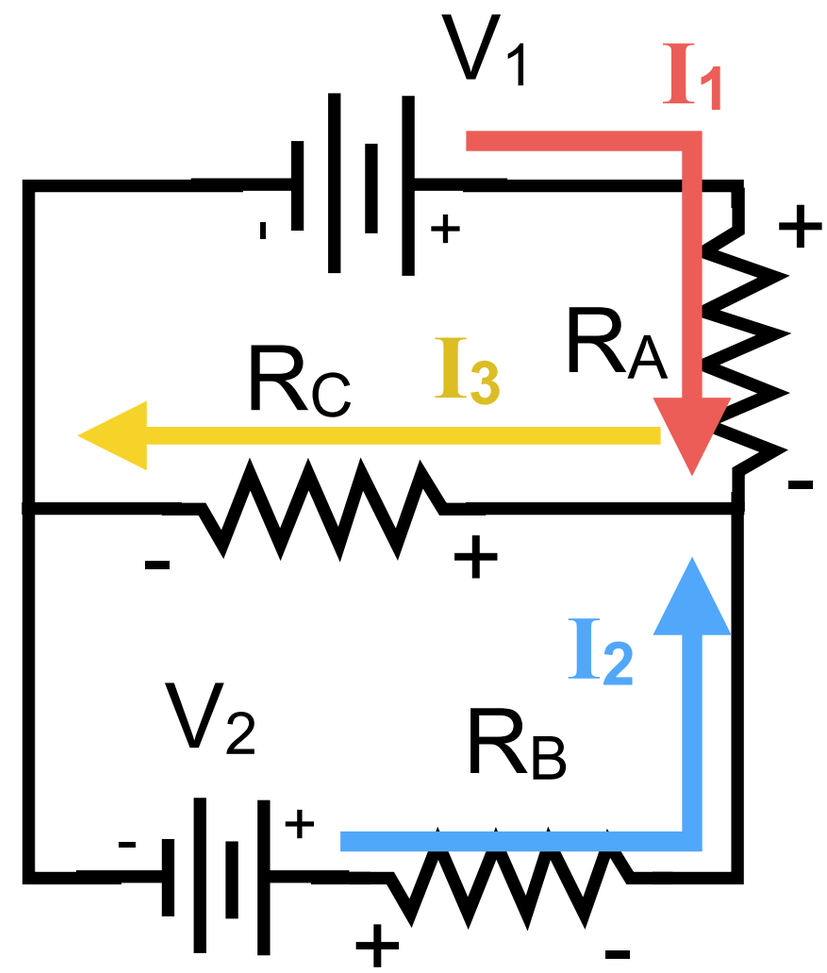

6. Solve

Algebra :(

$$+V_2 - I_2 R_B - I_3 R_C = 0$$

$$+V_2 - I_2 R_B + I_1 R_A - V_1 = 0$$

$$+V_1 - I_1 R_A - I_3 R_C = 0$$

$$I_3 = I_1 + I_2$$

$$\frac{+V_1 - I_3 R_C}{R_A} = I_1 \qquad \frac{+V_2 - I_3 R_C}{R_B} = I_2$$

Complex Circuit Example

Solve 2

What is the voltage dropped across resistor R_C?

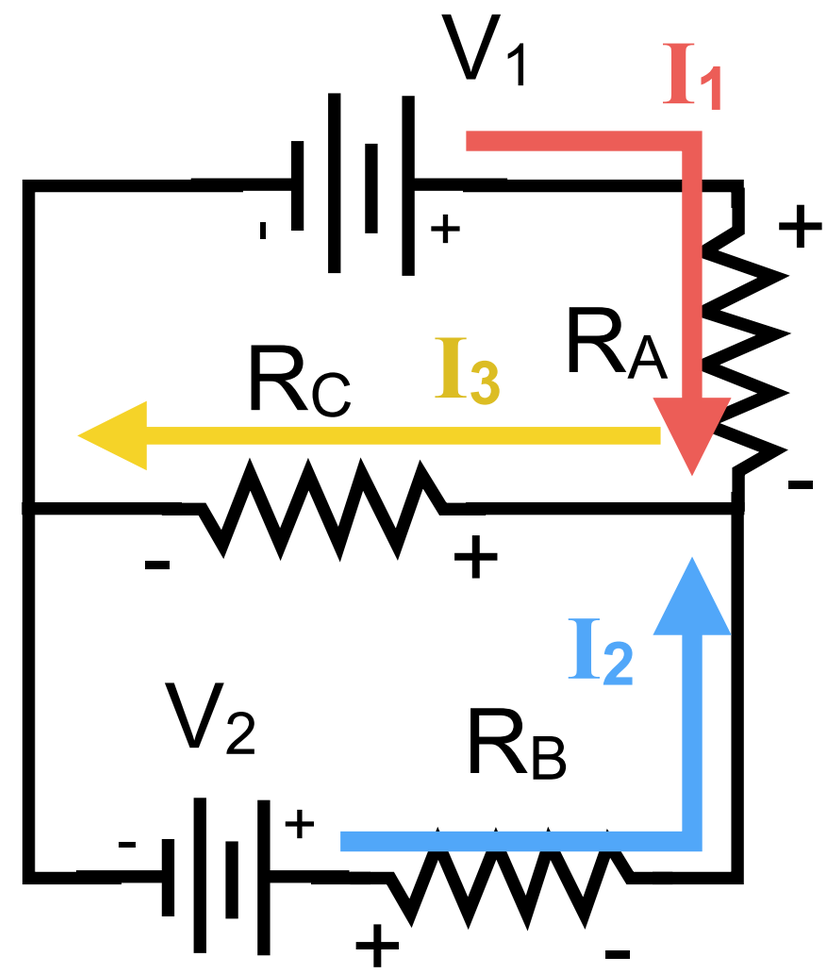

6. Solve

Algebra :(

$$I_3 = \frac{V_1 - I_3 R_C}{R_A} + \frac{V_2 - I_3 R_C}{R_B}$$

$$R_A R_B I_3 = R_B V_1 - I_3 R_C R_B + R_A V_2 - I_3 R_C R_A$$

$$R_A R_B I_3 + R_C R_B I_3 + I_3 R_C R_A = R_B V_1 + R_A V_2$$

$$(R_A R_B + R_C R_B + R_C R_A) I_3 = R_B V_1 + R_A V_2$$

Complex Circuit Example

Solve 3

What is the voltage dropped across resistor R_C?

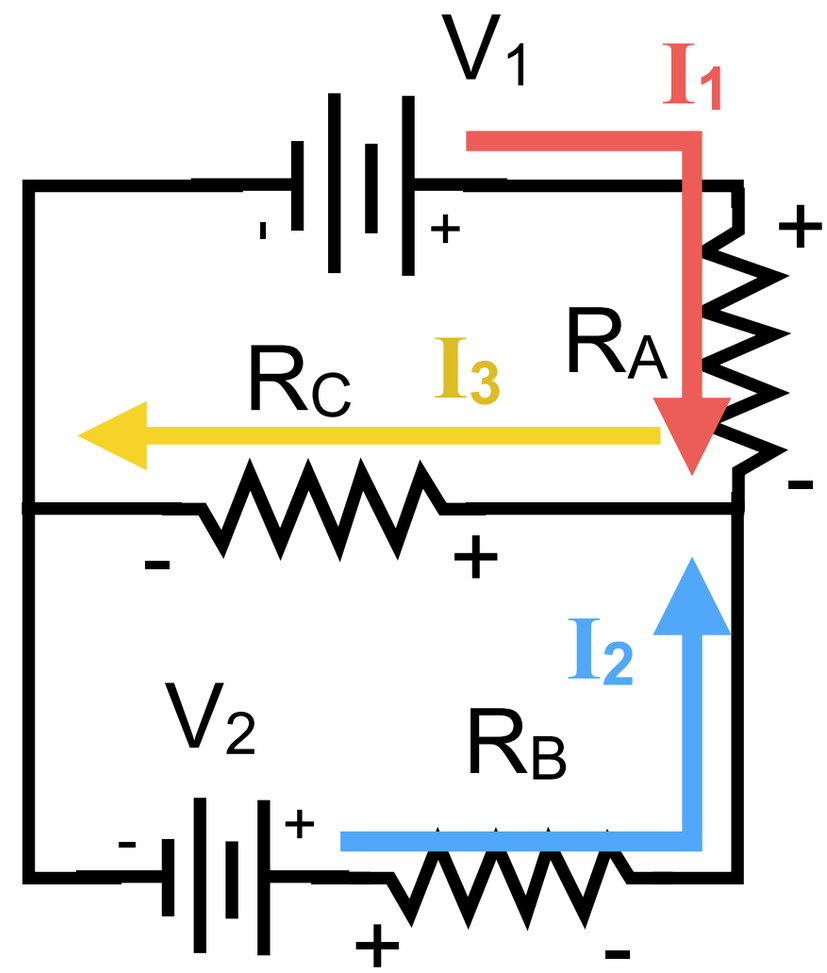

6. Solve

Algebra :(

$$(R_A R_B + R_C R_B + R_C R_A)\, I_3 = R_B V_1 + R_A V_2$$

$$I_3 = \frac{R_B V_1 + R_A V_2}{R_A R_B + R_C R_B + R_C R_A}$$

$$\Delta V_{RC} = R_C I_3 = \frac{R_C (R_B V_1 + R_A V_2)}{R_A R_B + R_C R_B + R_C R_A}$$