July 28, 2023

Reflection 5 : Due tonight by midnight

Conceptual HW 5 : Due Sunday by midnight

Lab : Tuesday

Written HW 5 : Due Tuesday by midnight

Quizzes 3 & 4 : Next Friday!

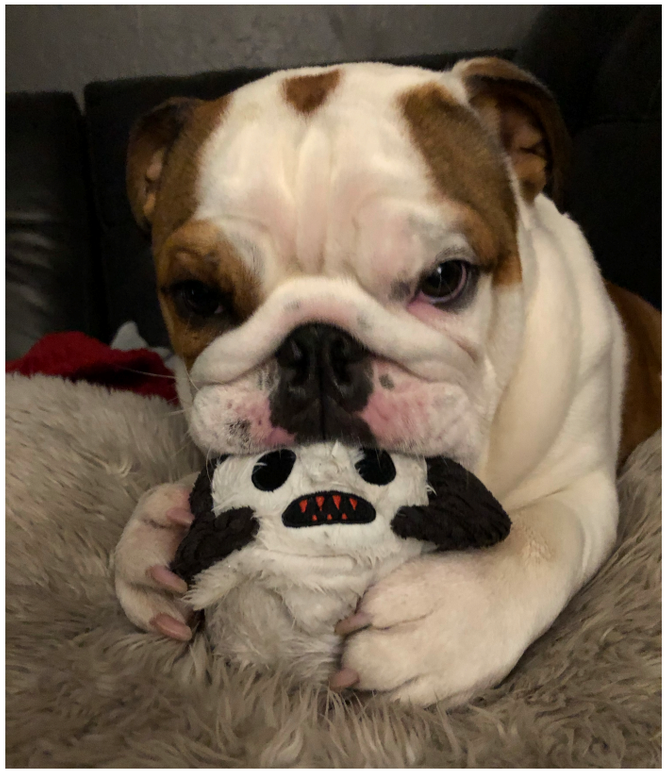

Office Hours

Mondays Noon-2pm

Thursdays 2-3pm

	Monday	Tuesday	Wednesday	Thursday	Friday
Week 5	July 24 V2 CH 9	July 25 Homework 4 Lab W5 - Potential & Field	July 26 V2 CH 9	July 27 V2 CH 10 Studio : Ohm's Law	July 28 V2 CH 10 Reflection
Week 6	July 31 V2 CH 10	Aug 1 Homework 5 Lab W6 - Resistivity	Aug 2 V2 CH 11	Aug 3 V2 CH 12 Studio : Circuits	Aug 4 Reflection Quiz 3&4: CH 8-10
Week 7	Aug 7 V2 CH 12	Aug 8 Homework 6 Lab W7 - DC Circuits	Aug 9 V2 CH 13	Aug 10 V2 CH 13 Studio : Magnetism	Aug 11 V2 CH 14 Reflection

Chapter 10

DC Circuits

RC Circuits

§ 10.5
Lecture 18

Connecting an RC Circuit

In the circuit to the left, the resistor represents a light bulb.

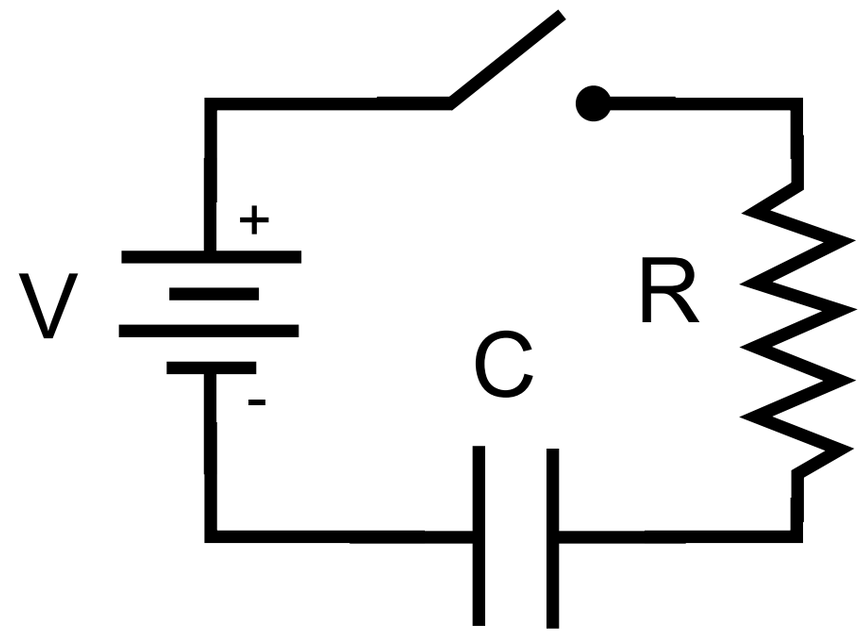

What will happen when the capacitor is connected to the light bulb in series with the battery?

1. The light bulb will turn on and stay on
2. The light bulb will turn on and then gradually dim
3. The light bulb will gradually turn on
4. The light bulb will not light
0. Don’t wait on my response

Connecting an RC Circuit

Loop Rule

Find direction of the current.

Label the sides of elements as **high (I in) or low (I out)**.

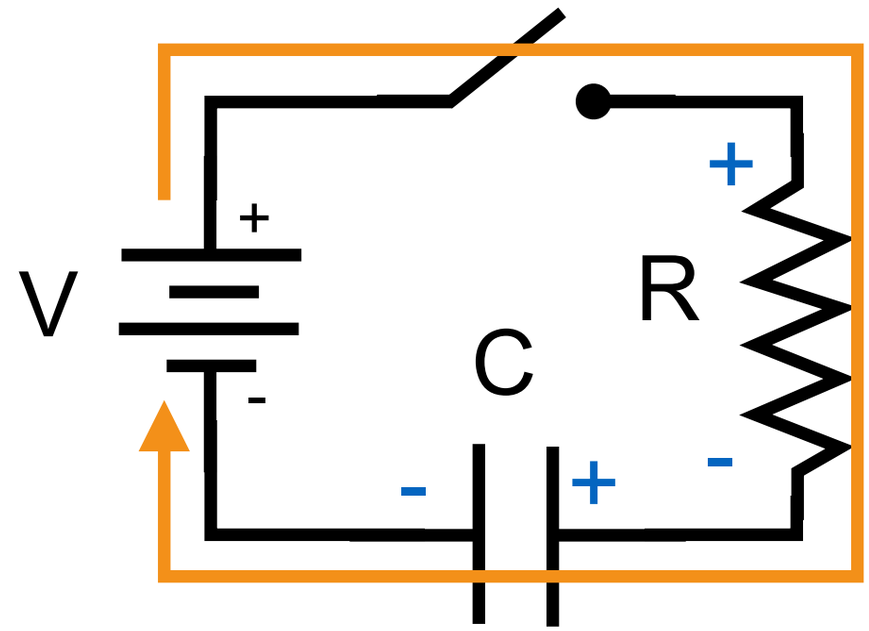

"Walk" around a loop, using the loop rule:

V decreases (high-to-low)	V decreases (high-to-low)	V increases (low-to-high)	
$-\ \Delta V_R$	$-\ \Delta V_C$	$+\ V$	$= 0$

$$-\ IR\ -\ Q/C\ +\ V\ =\ 0$$

$$-\ \frac{dQ}{dt}R\ -\ Q/C\ +\ V\ =\ 0$$

Connecting an RC Circuit

Solution : Charge

$$Q(t) = \underbrace{C\,V}\left(1 - e^{-t/\tau}\right)$$

Capacitor's charge

Maximum Charge

Time Constant

$\tau = RC$

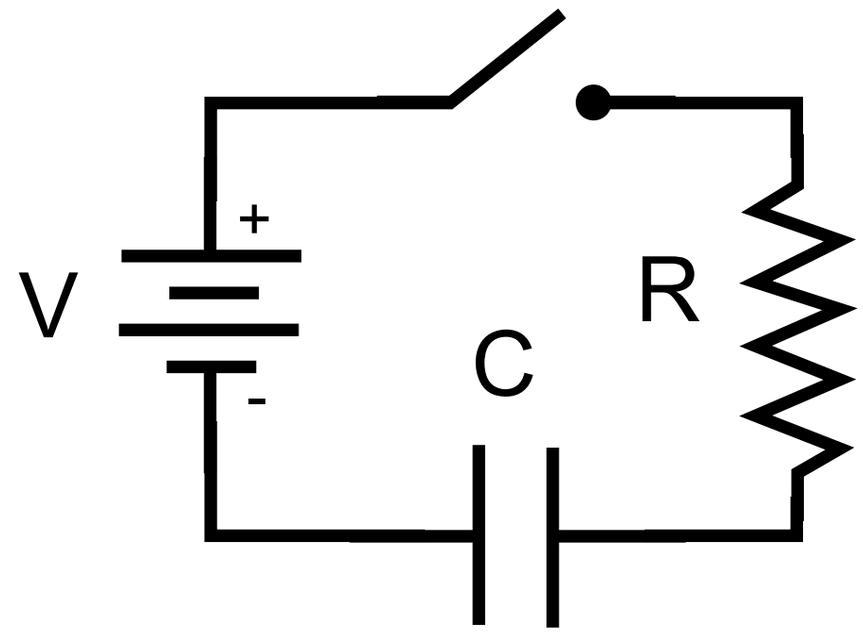

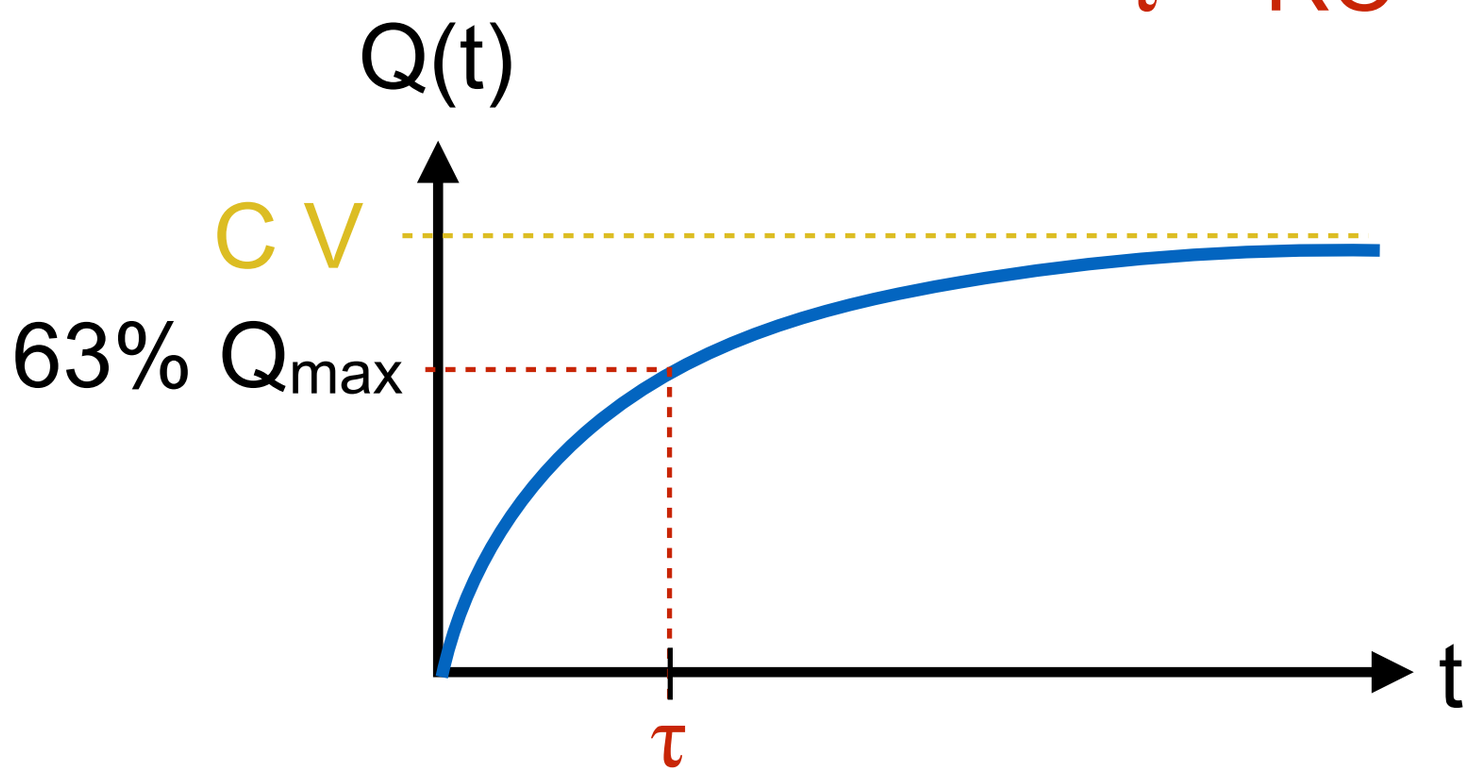

$$e^{-\tau/\tau} = e^{-1} = 0.37$$

Connecting an RC Circuit

Solution : Current

$$Q(t) = C\,V\left(1 - e^{-t/RC}\right) \qquad I = \frac{dQ}{dt}$$

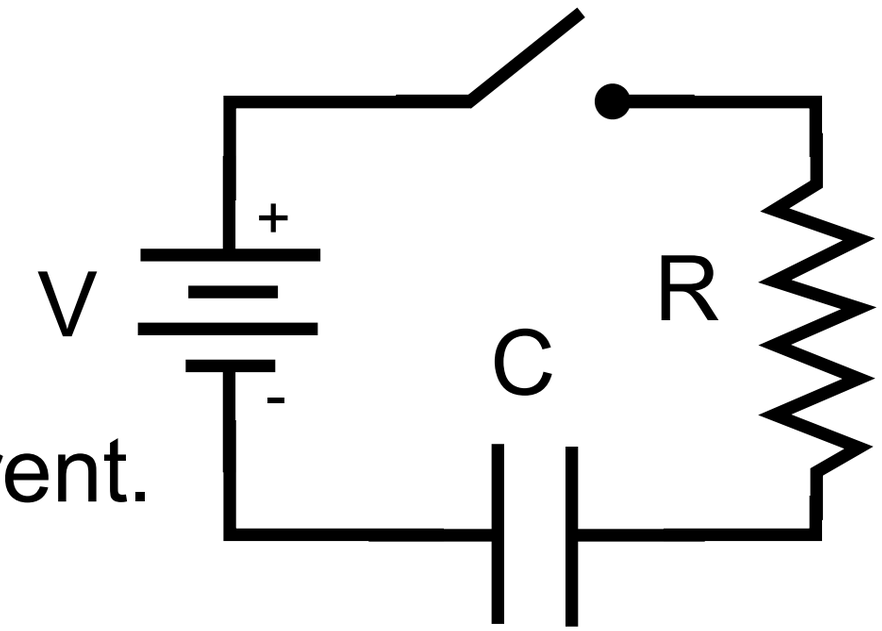

Calculate the equation for the current.

$$I = \frac{d}{dt} C\,V\left(1 - e^{-t/RC}\right)$$

$$= C\,V \frac{d}{dt}\left(1 - e^{-t/RC}\right)$$

$$= C\,V\left(- e^{-t/RC}\,(-1/RC)\right)$$

$$= \frac{V}{R} e^{-t/RC}$$

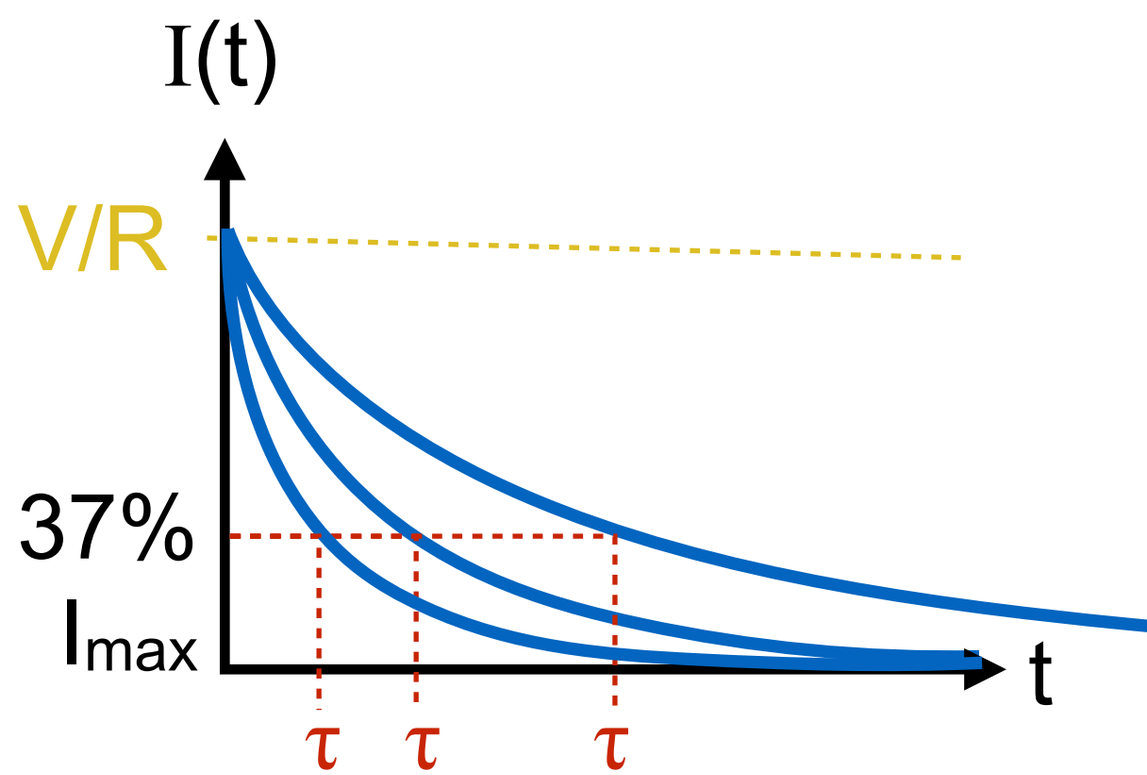

Multiple Capacitors

For calculating the time constant of this circuit, which capacitance should you use?

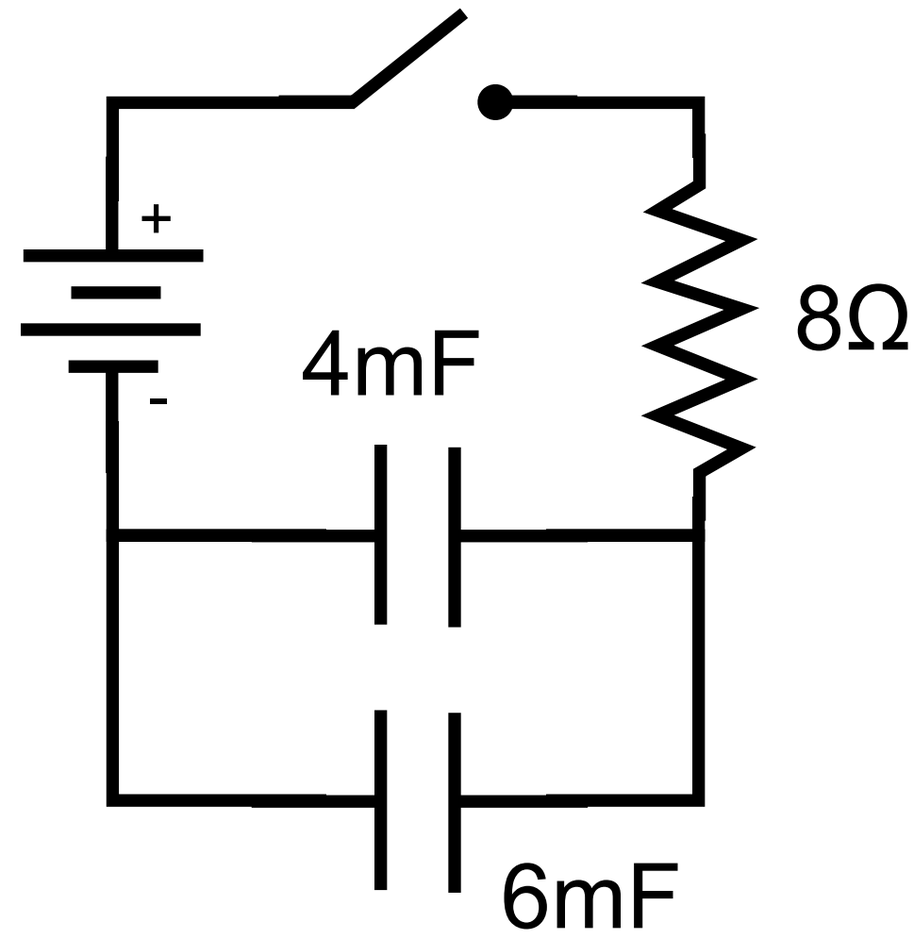

1. 4mF
2. 6mF
3. Their equivalent capacitance
4. The average capacitance
5. The difference between the capacitances
0. Don't wait on my response

$$\tau = R_{eq}C_{eq} = (8\Omega)(4\text{mF}+6\text{mF}) = 80 \times 10^{-3}\text{s} = 80 \text{ ms}$$

Discharging an RC Circuit

In the circuit to the left, the resistor represents a light bulb.

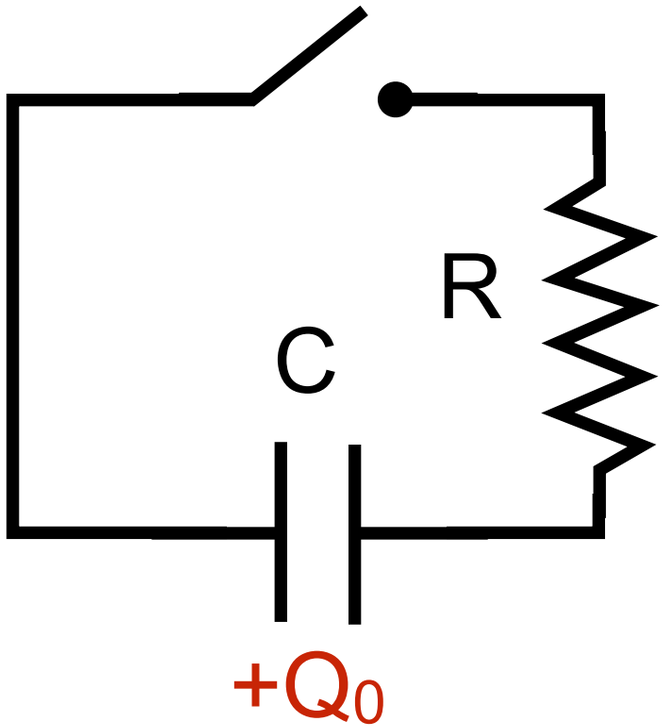

What will happen when the fully charged capacitor is connected to the light bulb?

1. The light bulb will turn on and stay on
2. The light bulb will turn on and then gradually dim
3. The light bulb will gradually turn on
4. The light bulb will not light
0. Don’t wait on my response

Discharging an RC Circuit

Equations

$$Q(t) = Q_0 \, e^{-t/RC}$$

$$I(t) = \frac{Q_0}{RC} \, e^{-t/RC}$$

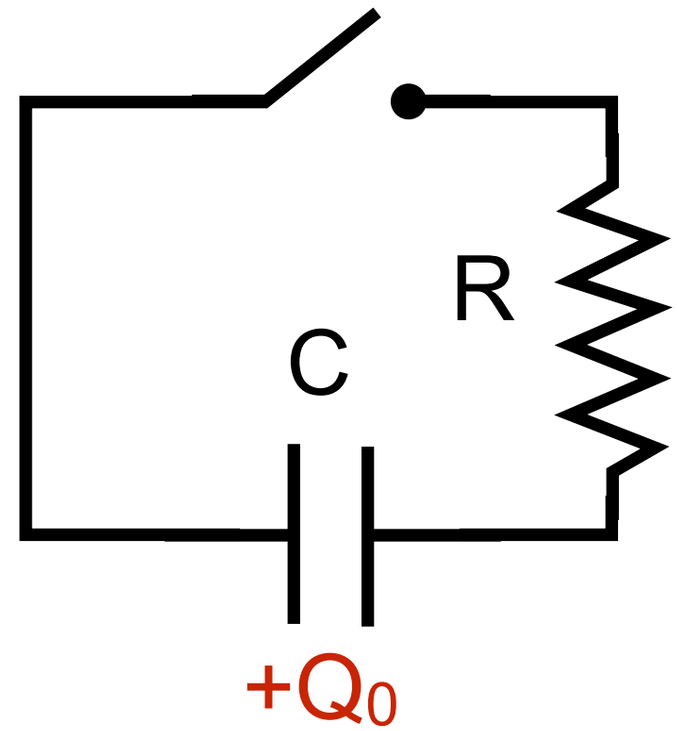

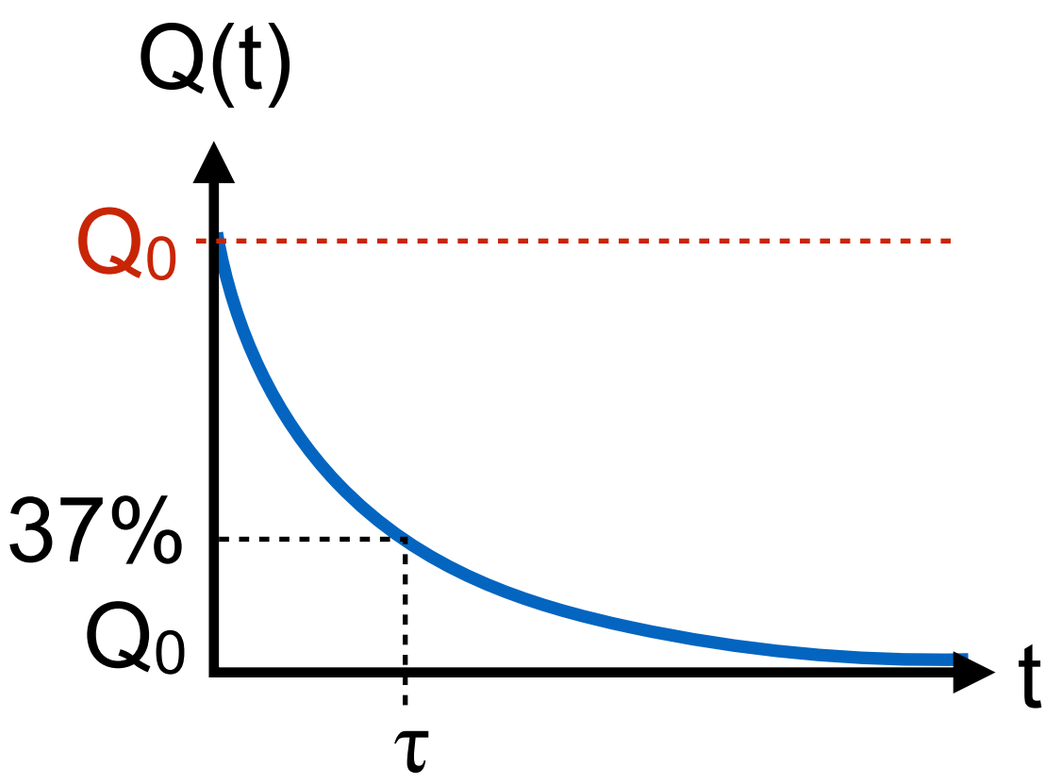

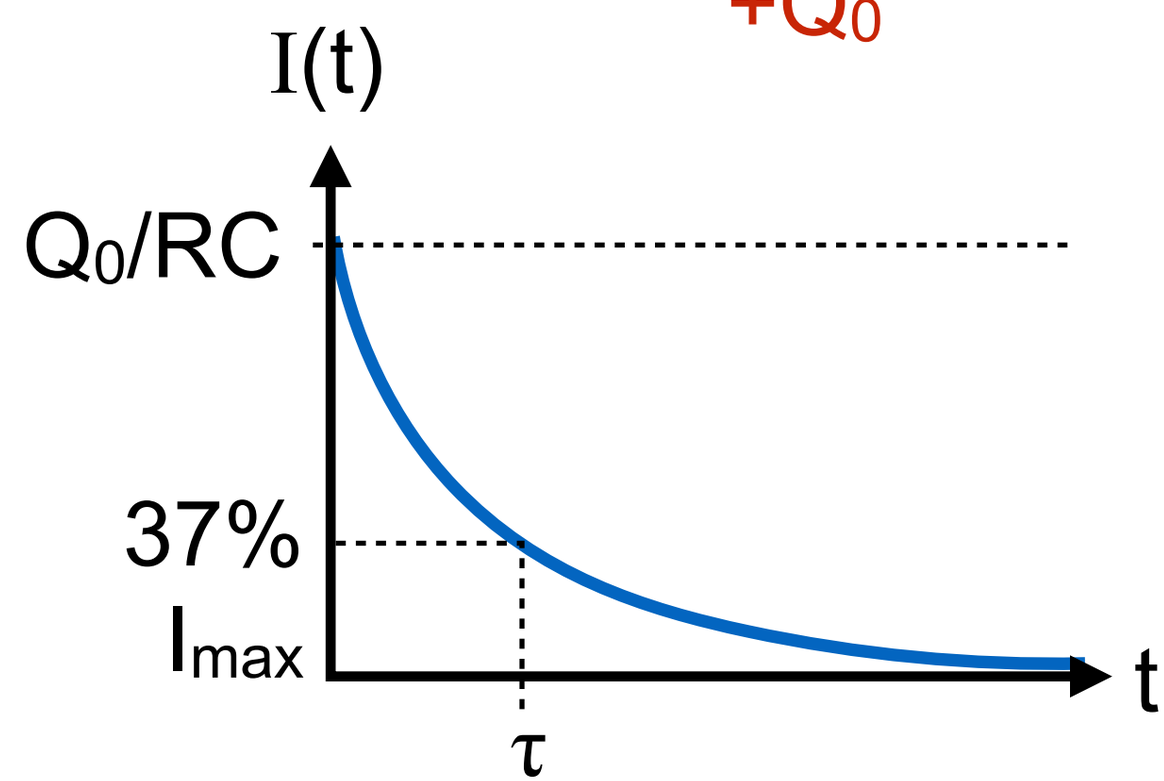

Discharging Capacitor and Power

The current through the resistor changes over time.

$$I(t) = \frac{Q_0}{RC} e^{-t/RC}$$

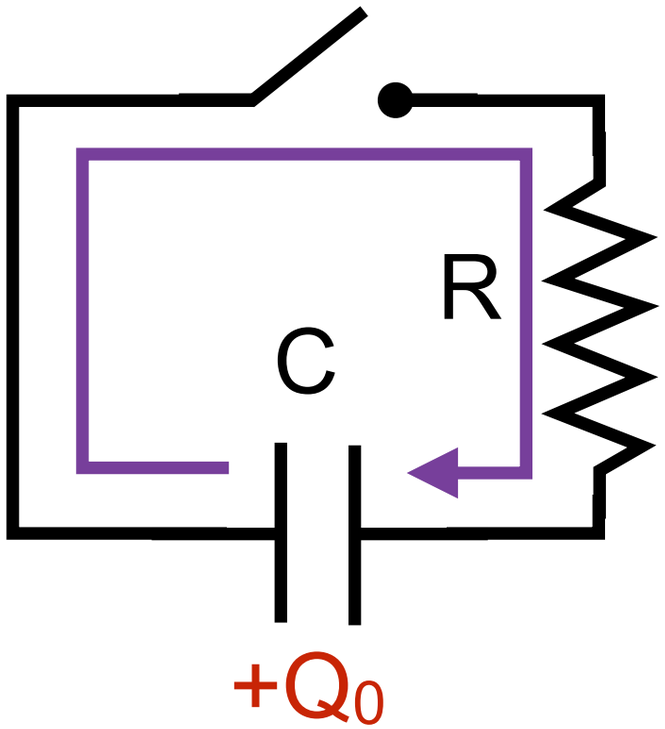

The power used by the resistor will *also* change in time.

$$P = I^2 R = \left(\frac{Q_0}{RC} e^{-t/RC} \right)^2 R$$

$$= \frac{Q_0^2}{RC^2} e^{-2t/RC}$$

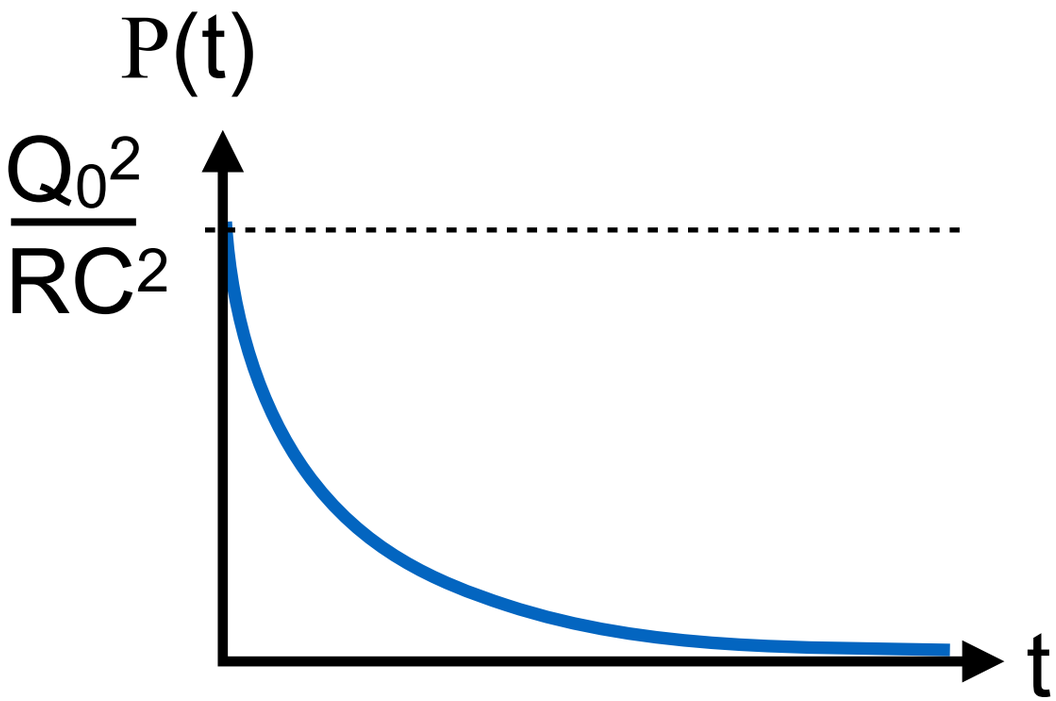

Discharging Capacitor and Power

Energy Loss

<u>Integrate</u> the power to calculate the total energy dissipated by the resistor.

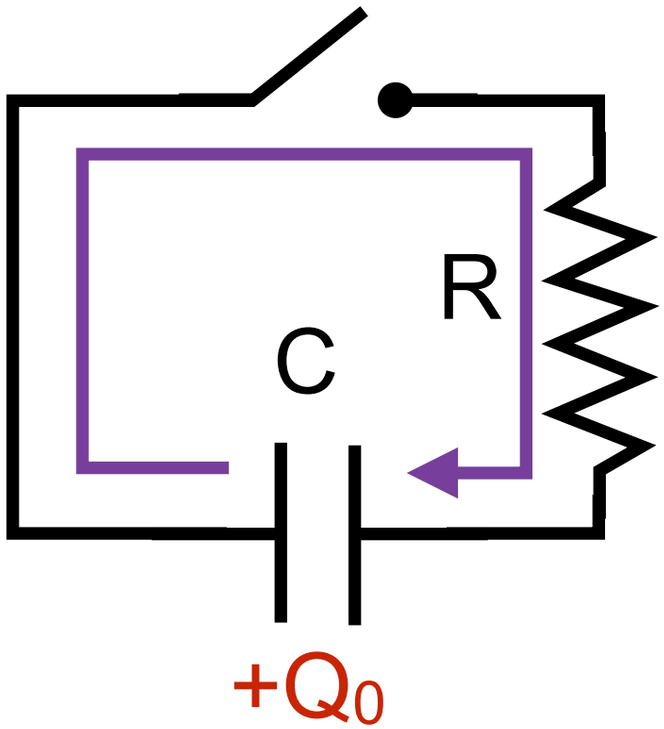

$$P(t) = \frac{Q_0^2}{RC^2} e^{-2t/RC} \qquad E_{lost} = \int_0^\infty P(t)\,dt$$

$$E_{lost} = \frac{Q_0^2}{RC^2}\int_0^\infty e^{-2t/RC}\,dt = \frac{Q_0^2}{RC^2}\left(-\frac{RC}{2}e^{-2t/RC}\right)\Bigg|_{t=0}^{t=\infty}$$

$$= -\frac{Q_0^2}{2C}\left(e^{-\infty} - e^{0}\right) = \frac{Q_0^2}{2C}$$

Energy stored in a capacitor

$$U_C = \frac{Q^2}{2C}$$

THE SAME!!

Pre-class Slides

Capacitor Combinations

§ 8.2
Lecture 18

Youtube Playlist

Series Capacitors

Capacitors in <u>series</u> act as one capacitor with a larger plate separation.

Larger plate separation (for parallel plates) causes capacitance to…

$$C = \frac{\varepsilon_0 A}{d}$$

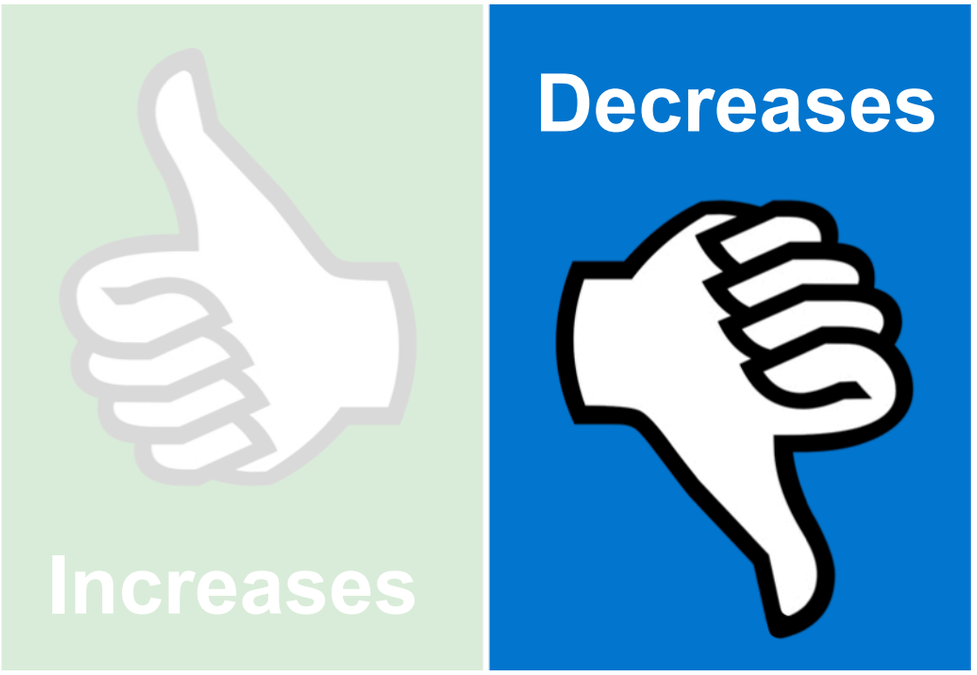

0. Don’t wait on my response

Series Capacitors

Equation

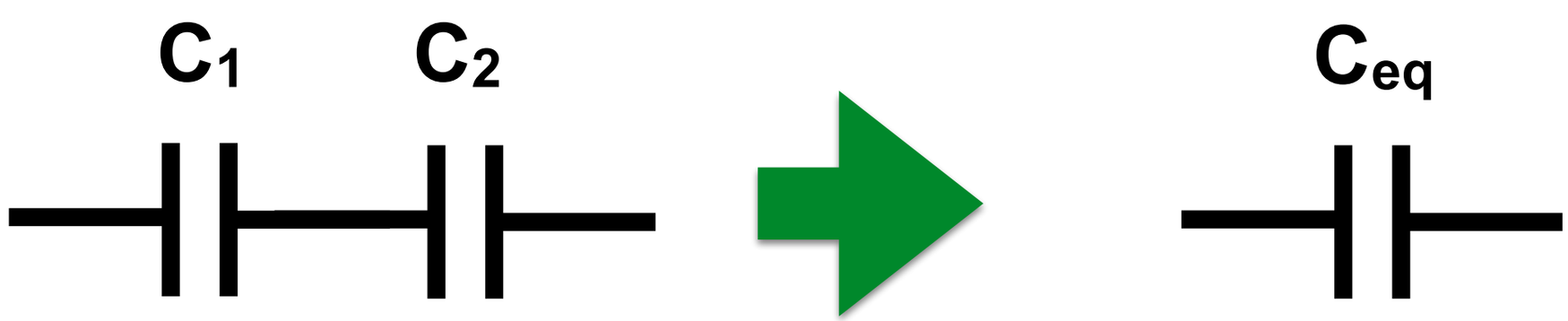

$$\frac{1}{C_{eq}} = \frac{1}{C_1} + \frac{1}{C_2} + \frac{1}{C_3} + \ldots = \sum_i \frac{1}{C_i}$$

$$C = \frac{\varepsilon_0 A}{d}$$

Charge on each capacitor is the same

- Charge leaving one capacitor goes directly to the next one

Equivalent capacitance is *smaller* than all the original capacitances

Parallel Capacitors

Capacitors in <u>parallel</u> act as one capacitor with a larger area.

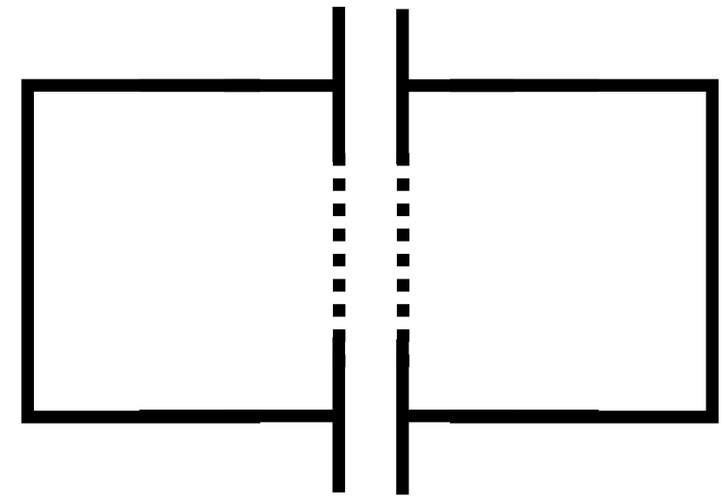

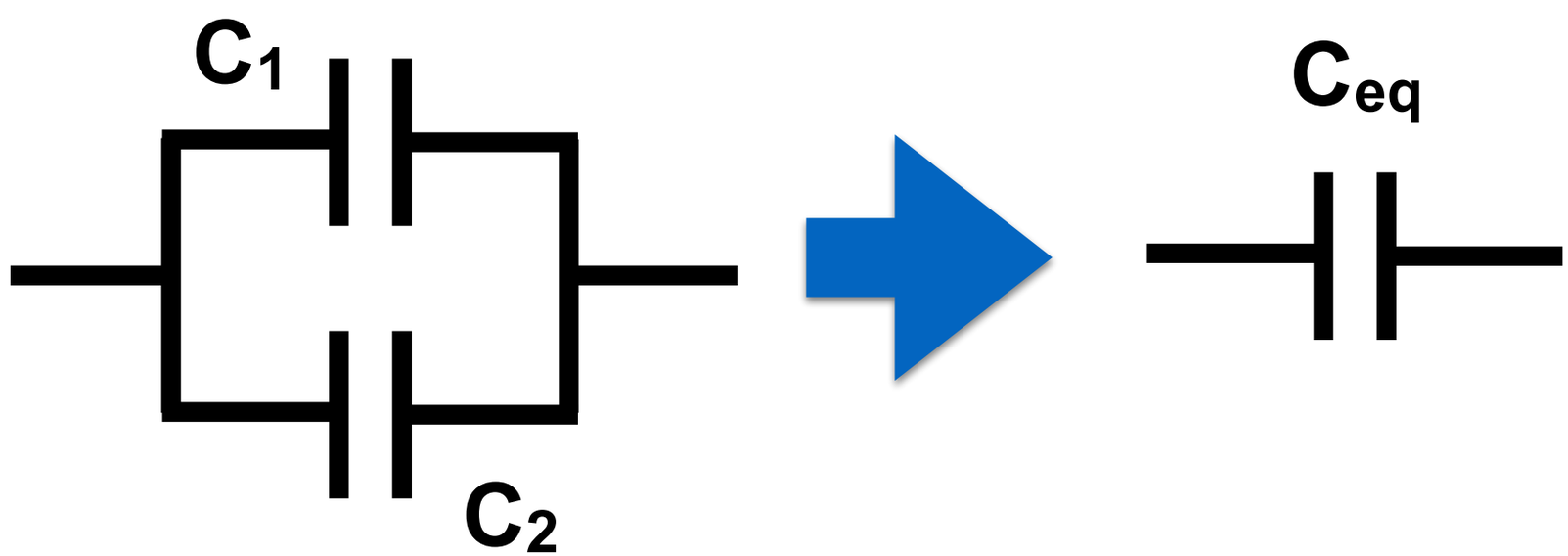

$$C_{eq} = C_1 + C_2 + C_3 + \ldots = \sum_i C_i$$

Voltage across each capacitor is the same (Loop Rule)

Capacitor Combinations

Two identical capacitors can be attached in parallel or in series. For which combination is more charge stored if the same voltage is applied?

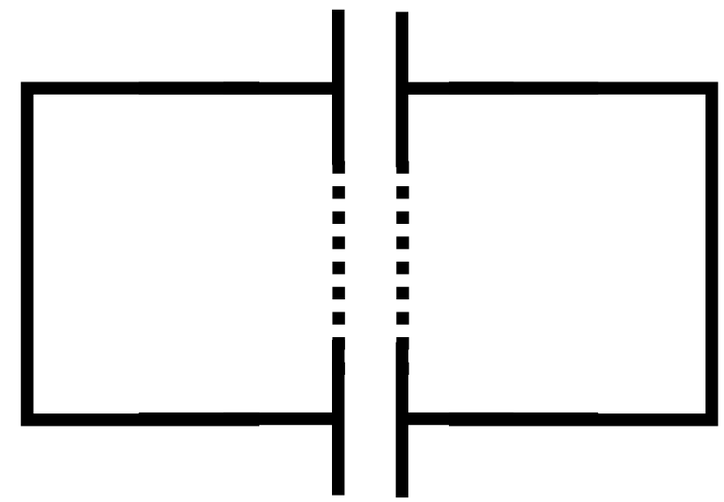

1. Series
2. Parallel
3. The same
0. Don't wait on my response

$Q = C\,V$

Parallel : $C_{eq} > C_i$

Series : $C_{eq} < C_i$

Capacitor Combinations

Loop Rule Check

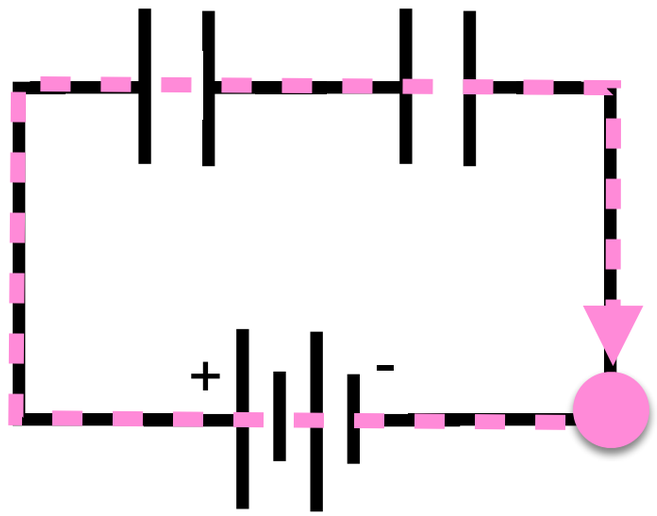

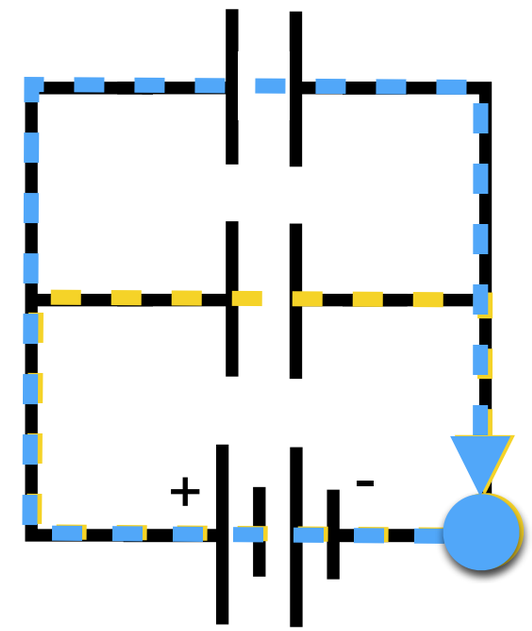

$+V_B \; -V_{C1} \; -V_{C2} = 0$

$+V_B \; -2\,V_C = 0$

$V_C = V_B / 2$

$+V_B \; -V_C = 0$

$+V_B \; -V_C = 0$

$V_C = V_B$

$Q = C\,V = C\,V_B / 2$

$Q = C\,V = C\,V_B$

Check Your Understanding

Capacitor Network

All three capacitors have the same capacitance, C.

What is the total capacitance of all three?

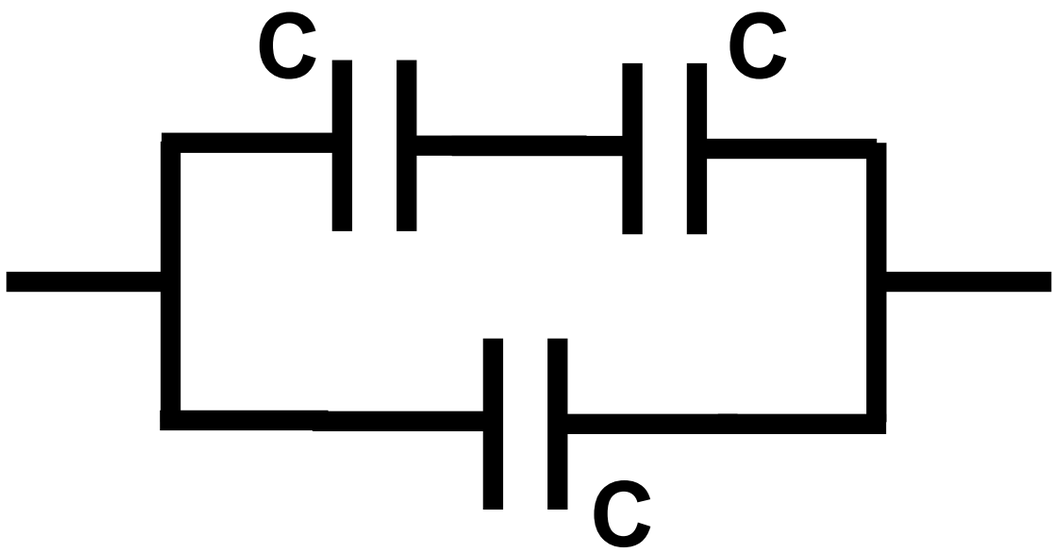

1. (1/3) C
2. (2/3) C
3. C
4. (3/2) C
5. 3 C

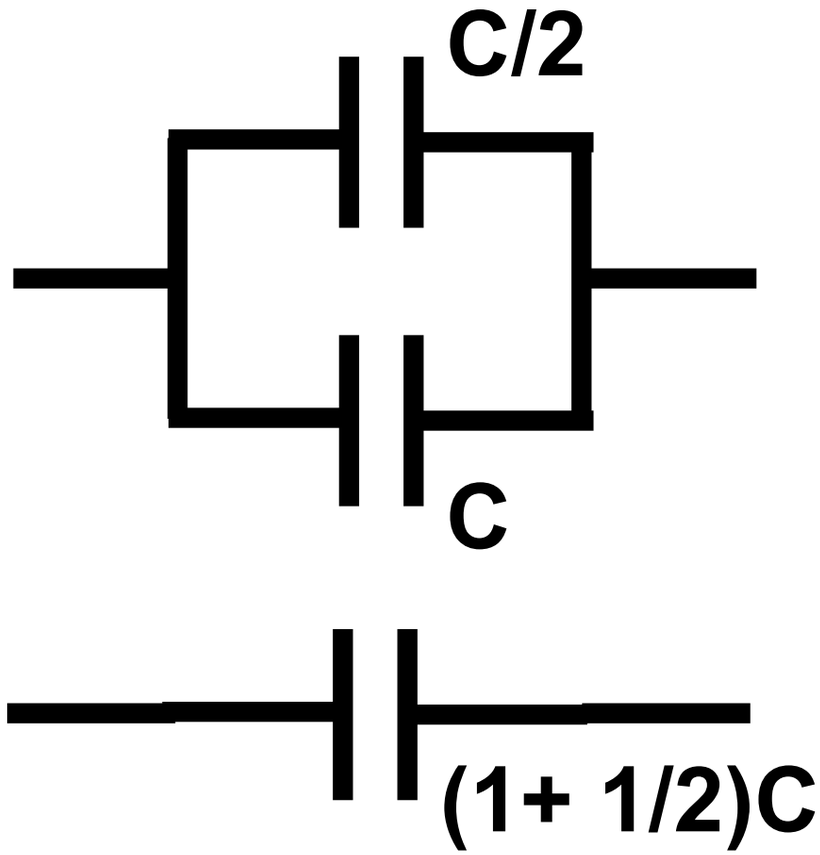

WARNING!

	Resistors, $R = \frac{\rho L}{A}$	Capacitors, $C = \frac{\varepsilon_0 A}{d}$
Parallel (Larger areas)	$\frac{1}{R_{eq}} = \sum_i \frac{1}{R_i}$ $R_{eq} < R_i$	$C_{eq} = \sum_i C_i$ $C_{eq} > C_i$
Series (Longer distance)	$R_{eq} = \sum_i R_i$ $R_{eq} > R_i$	$\frac{1}{C_{eq}} = \sum_i \frac{1}{C_i}$ $C_{eq} < C_i$