July 31, 2023

Lab Tomorrow

Written HW 5 : Due tomorrow by midnight

Studio Thursday : Meet from Noon-2pm

Quizzes 3 & 4 : Friday!

Reflection 6 : Due Friday by midnight

Conceptual HW 6 : Due Sunday by midnight

Office Hours

Mondays	Noon-2pm
Thursdays	2-3pm

	Monday	Tuesday	Wednesday	Thursday	Friday
Week 5	July 24 V2 CH 9	July 25 Homework 4 Lab W5 - Potential & Field	July 26 V2 CH 9	July 27 V2 CH 10 Studio : Ohm's Law	July 28 V2 CH 10 Reflection
Week 6	July 31 V2 CH 10	Aug 1 Homework 5 Lab W6 - Resistivity	Aug 2 V2 CH 11	Aug 3 V2 CH 12 Studio : Circuits	Aug 4 Reflection Quiz 3&4: CH 8-10
Week 7	Aug 7 V2 CH 12	Aug 8 Homework 6 Lab W7 - DC Circuits	Aug 9 V2 CH 13	Aug 10 V2 CH 13 Studio : Magnetism	Aug 11 V2 CH 14 Reflection

Chapter 10

DC Circuits

Complex RC Circuits

§ —
Lecture 19

Solving Complex Circuits

1. **Draw** (guess) direction of **currents** in each part of the circuit. Name the currents.
2. **Label sides** of circuit elements (resistors, capacitors) with a high-voltage and low-voltage side
3. Use Kirchoff's **Loop Rule** to write equations for the voltage sum around each loop in the circuit.
4. Use Kirchoff's **Junction Rule** to write equations for the currents at each junction
5. Use **Ohm's law** to relate currents and voltages (or **capacitance definition** to relate current & charge)
6. **Solve** your system of equations (or differential equation!)

Complex RC Circuit

Consider this circuit.

The capacitors are initially uncharged.

At time t=0, the switch is closed.

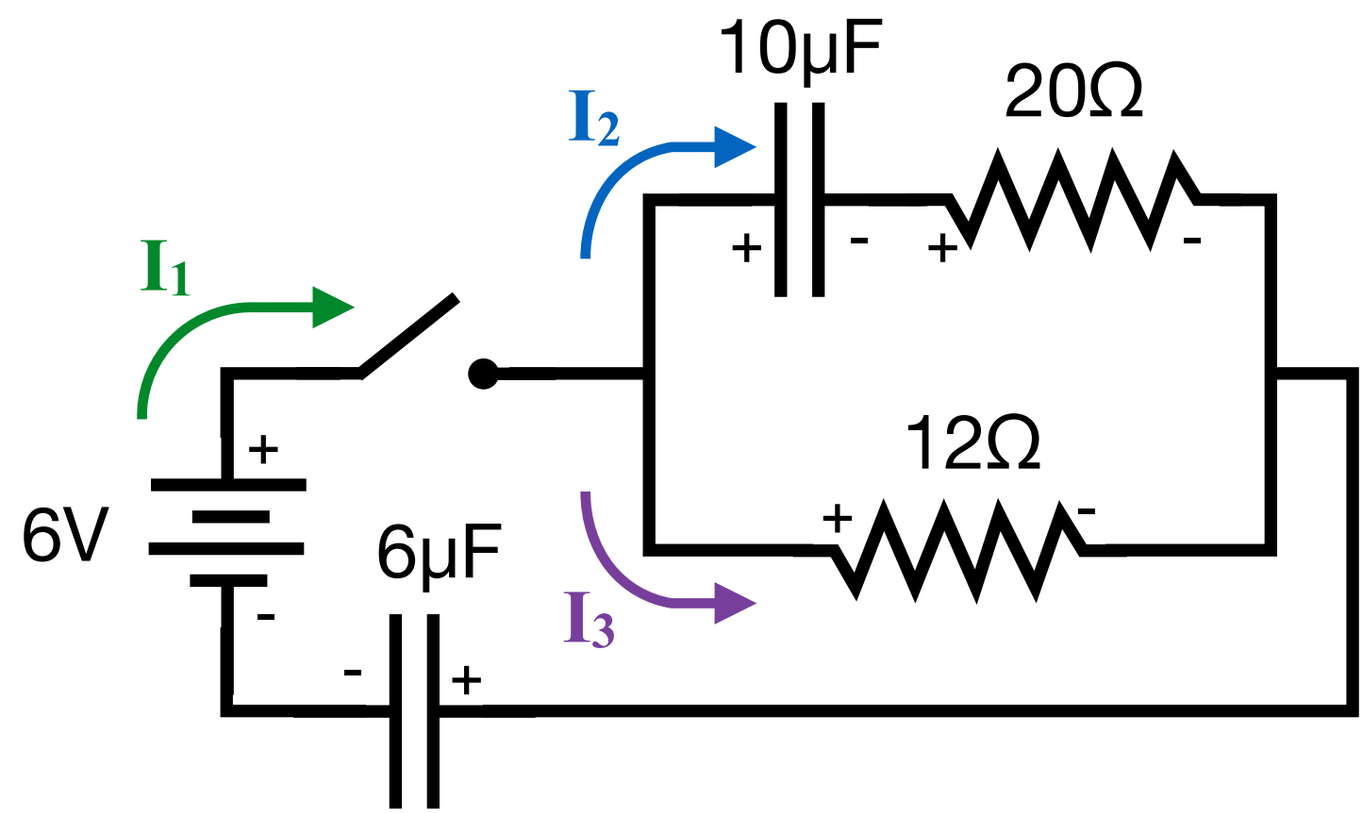

Find a system of equations for the behavior of the currents and capacitors' charge after the switch is closed.

1. **Draw Currents**
2. **Label Sides**

Complex RC Circuit

Kirchoff's Laws

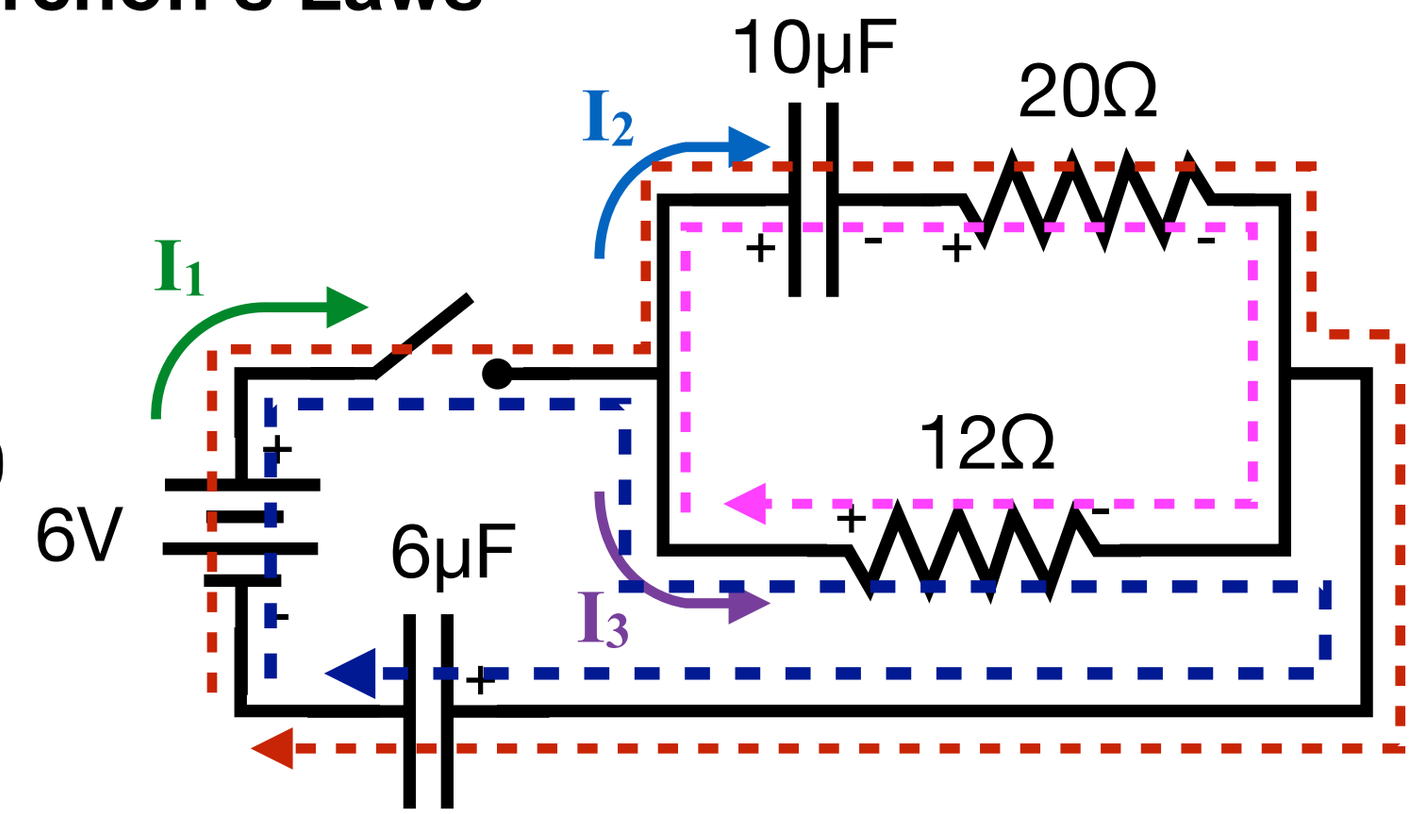

3. Loop Rule

"Upper" Loop

$+ 6V - V_{10\mu F} - V_{20\Omega} - V_{6\mu F} = 0$

"Lower" Loop

$+ 6V - V_{12\Omega} - V_{6\mu F} = 0$

"Inside" Loop

$- V_{10\mu F} - V_{20\Omega} + V_{12\Omega} = 0$

4. Junction Rule

$I_1 = I_2 + I_3$

Complex RC Circuit

System of Equations

5. **Ohm's Law & Cap Def.**

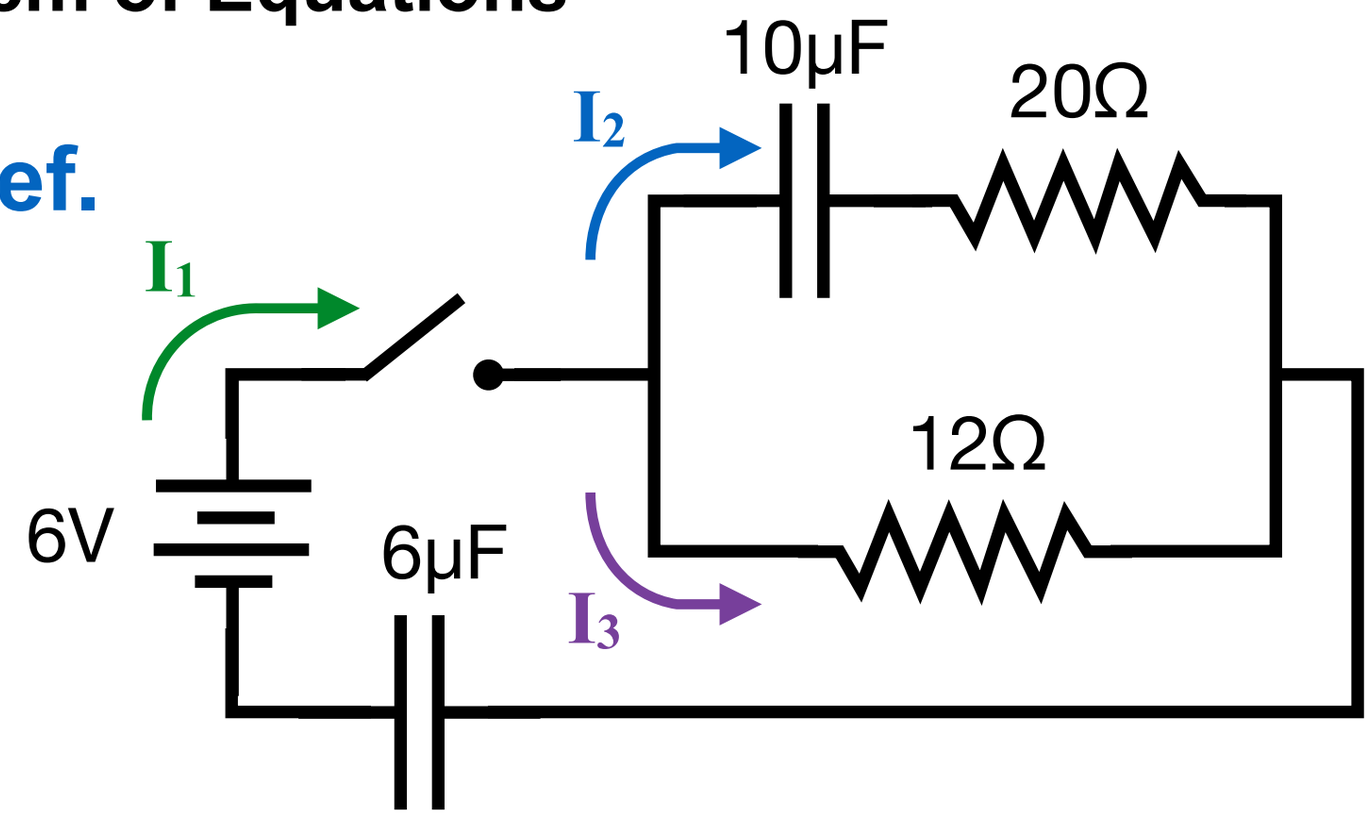

$$+ 6V - \frac{Q_{10}}{10\mu} - 20\, I_2 - \frac{Q_6}{6\mu} = 0$$

$$+ 6V - 12\, I_3 - \frac{Q_6}{6\mu} = 0$$

$$- \frac{Q_{10}}{10\mu} - 20\, I_2 + 12\, I_3 = 0$$

$$I_1 = I_2 + I_3$$

$$I_2 = \frac{dQ_{10}}{dt} \qquad I_1 = \frac{dQ_6}{dt}$$

$\frac{dQ_{10}}{dt}$ is equal to which current?

Q_{10}

1. I_1
2. I_2
3. I_3

Q_6

$\frac{dQ_6}{dt}$ is equal to which current?

Complex RC Circuit

Solution $I_2(t=0)$

$$+ 6V - \frac{Q_{10}}{10\mu} - 20\, I_2 - \frac{Q_6}{6\mu} = 0$$

$$+ 6V - 12\, I_3 - \frac{Q_6}{6\mu} = 0$$

$$- \frac{Q_{10}}{10\mu} - 20\, I_2 + 12\, I_3 = 0$$

$$I_1 = I_2 + I_3$$

$$I_2 = \frac{dQ_{10}}{dt} \qquad I_1 = \frac{dQ_6}{dt}$$

$$+ 6V - 0 - 20\, I_2 - 0 = 0$$

$$I_2 = 6/20$$

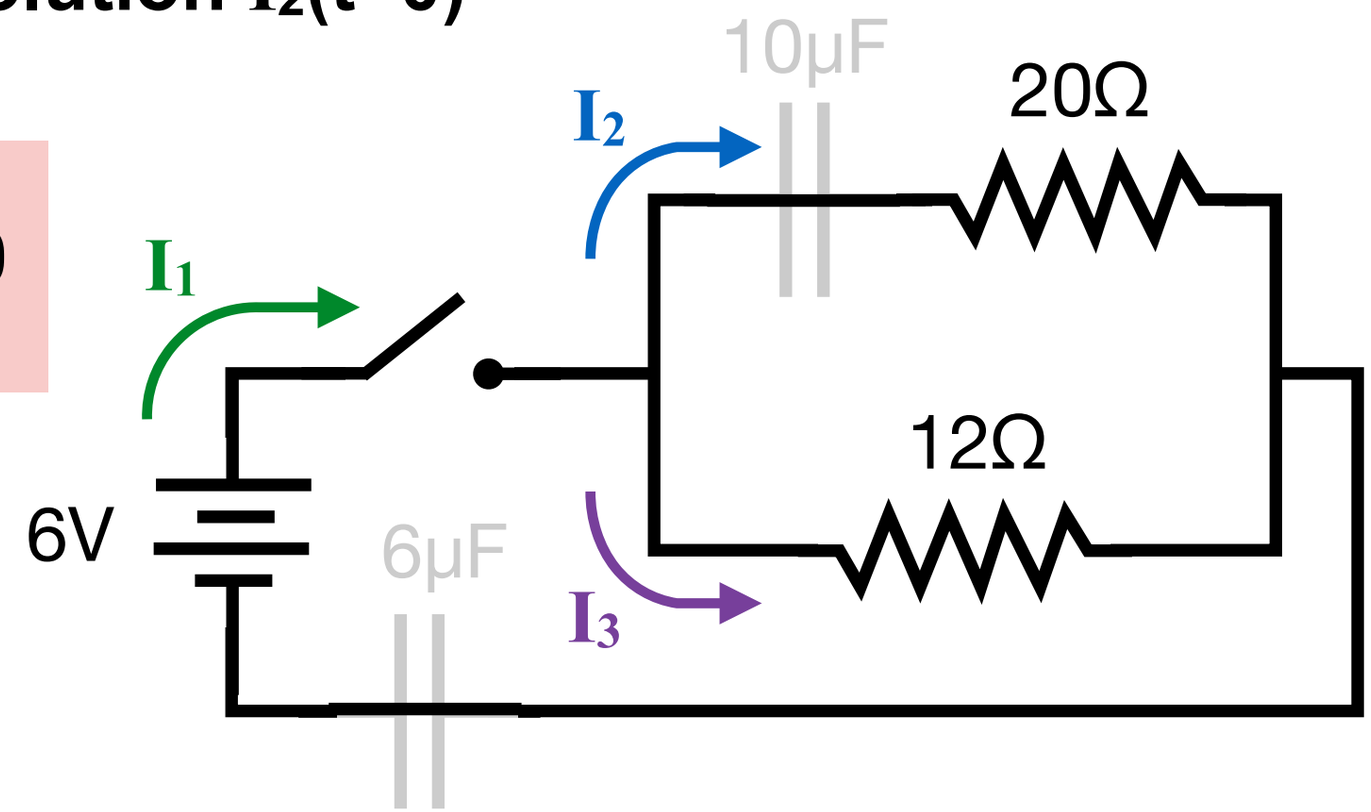

At t=0, what is the current I_2?

1. 0 A
2. 0.2 A
3. 0.3 A
4. 0.5 A
5. 0.8 A

Complex RC Circuit

Solution $V_2(t=0)$

$$+ 6V - \frac{Q_{10}}{10\mu} - 20\, I_2 - \frac{Q_6}{6\mu} = 0$$

$$+ 6V - 12\, I_3 - \frac{Q_6}{6\mu} = 0$$

$$- \frac{Q_{10}}{10\mu} - 20\, I_2 + 12\, I_3 = 0$$

$$I_1 = I_2 + I_3$$

$$I_2 = \frac{dQ_{10}}{dt} \qquad I_1 = \frac{dQ_6}{dt}$$

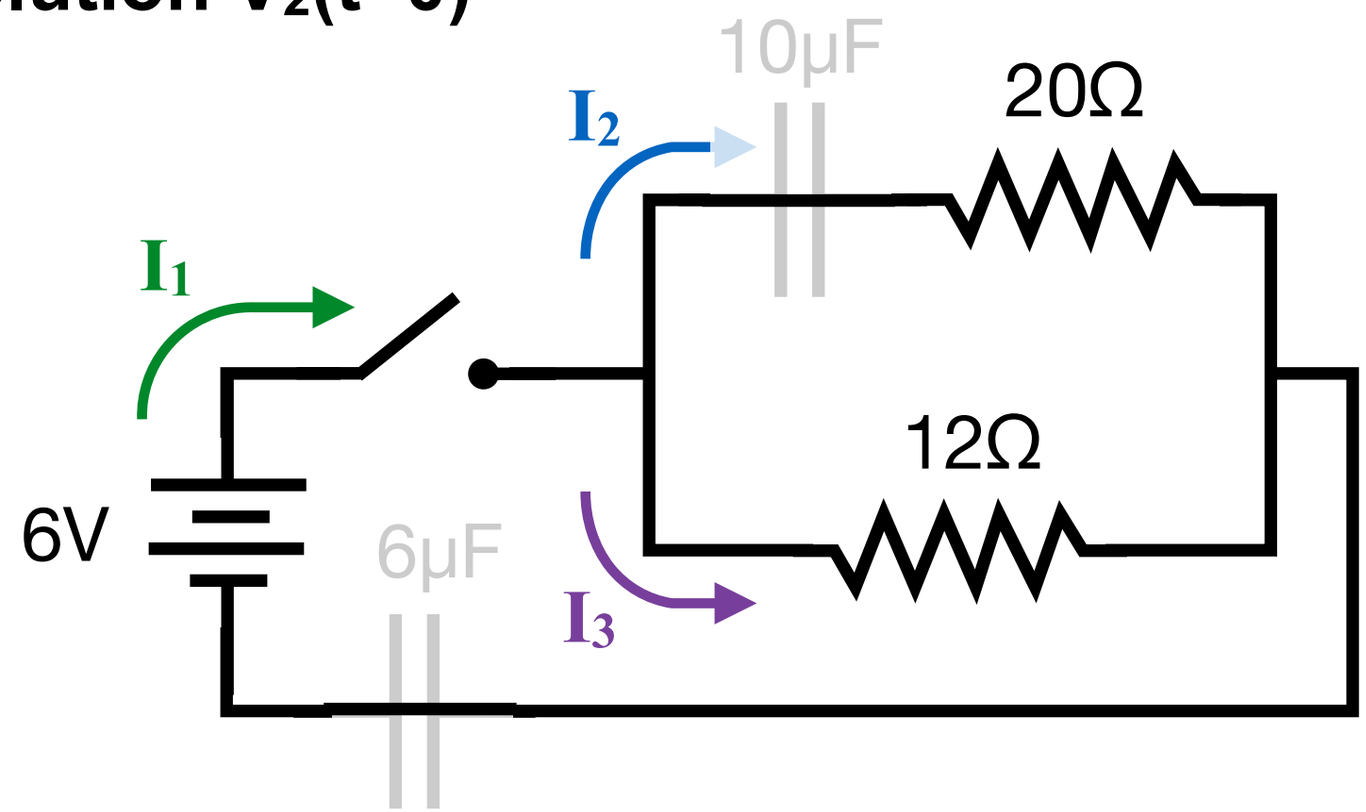

At t=0, what is the voltage on the 12Ω resistor?

1. 0 V
2. 2.25 V
3. 3 V
4. 3.6 V
5. 6 V

$$+ 6V - 12\, I_3 - 0 = 0$$

$$+ 6V - V_{12} = 0 \longrightarrow V_{12} = 6\ V$$

Complex RC Circuit

Solution $I_3(t=0)$

$$+ 6V - \frac{Q_{10}}{10\mu} - 20\, I_2 - \frac{Q_6}{6\mu} = 0$$

$$+ 6V - 12\, I_3 - \frac{Q_6}{6\mu} = 0$$

$$- \frac{Q_{10}}{10\mu} - 20\, I_2 + 12\, I_3 = 0$$

$$I_1 = I_2 + I_3$$

$$I_2 = \frac{dQ_{10}}{dt} \qquad I_1 = \frac{dQ_6}{dt}$$

$$V_{12} = 12\Omega\, I_3$$

$$6V = 12\Omega\, I_3$$

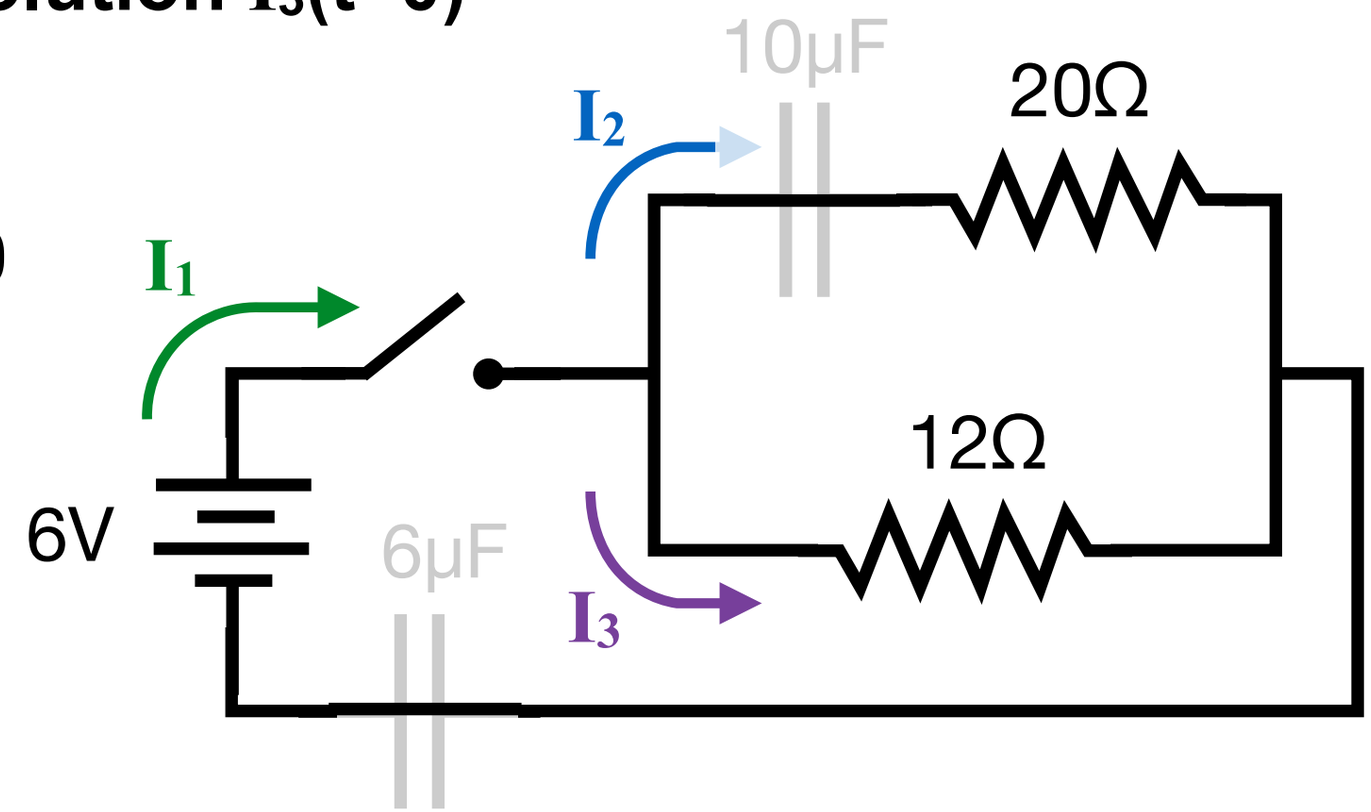

At t=0, what is the current I_3?

1. 0 A
2. 0.2 A
3. 0.3 A
4. 0.5 A
5. 0.8 A

Complex RC Circuit

Solution $I_1(t=\infty)$

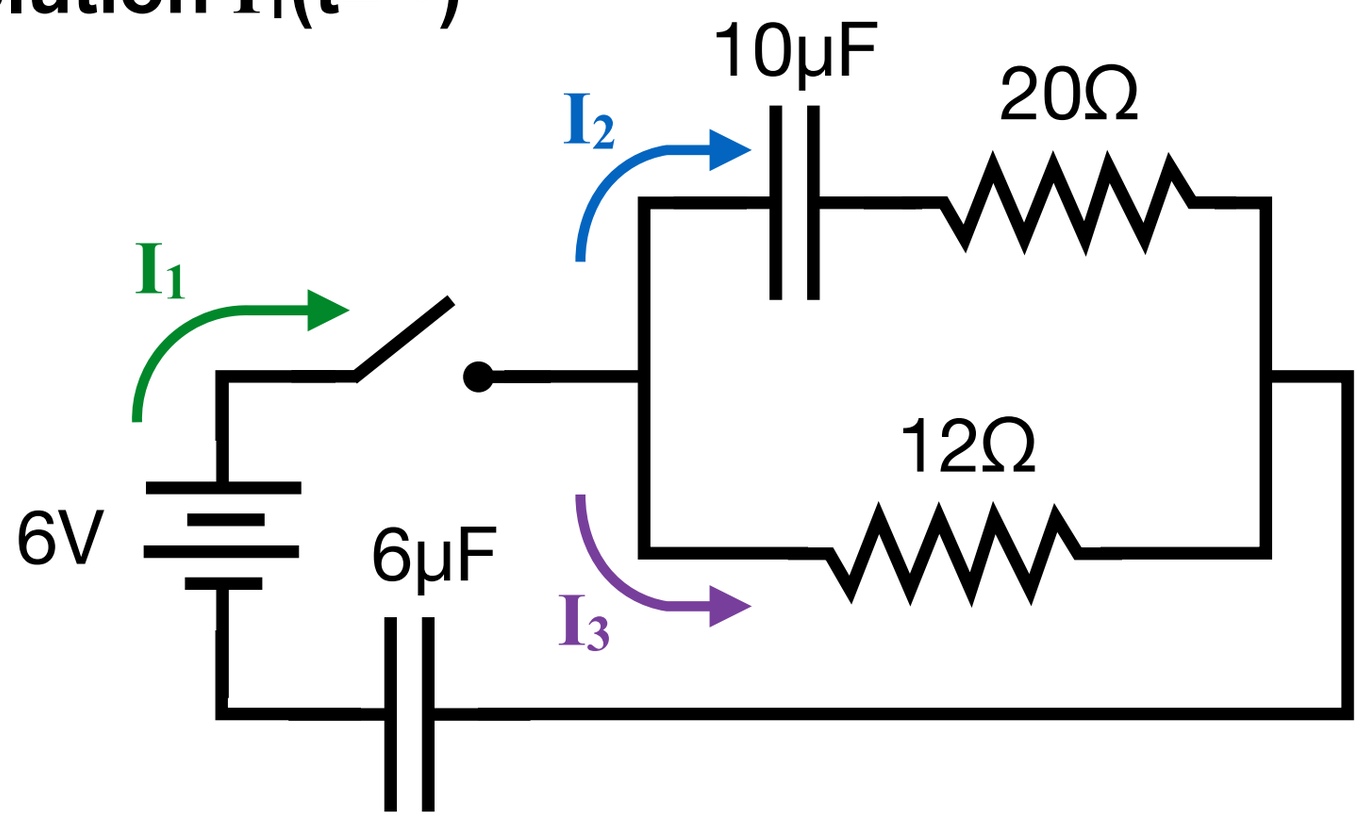

$$+ 6V - \frac{Q_{10}}{10\mu} - 20\, I_2 - \frac{Q_6}{6\mu} = 0$$

$$+ 6V - 12\, I_3 - \frac{Q_6}{6\mu} = 0$$

$$- \frac{Q_{10}}{10\mu} - 20\, I_2 + 12\, I_3 = 0$$

$$I_1 = I_2 + I_3$$

$$I_2 = \frac{dQ_{10}}{dt}$$

$$I_1 = \frac{dQ_6}{dt}$$

$$\frac{dQ_6}{dt} \longrightarrow 0$$

After a very long time, what is the current I_1?

1. 0 A
2. 0.2 A
3. 0.3 A
4. 0.5 A
5. 0.8 A

Complex RC Circuit

Solution $I_2(t=\infty)$

$$+ 6V - \frac{Q_{10}}{10\mu} - 20\, I_2 - \frac{Q_6}{6\mu} = 0$$

$$+ 6V - 12\, I_3 - \frac{Q_6}{6\mu} = 0$$

$$- \frac{Q_{10}}{10\mu} - 20\, I_2 + 12\, I_3 = 0$$

$$I_1 = I_2 + I_3$$

$$I_2 = \frac{dQ_{10}}{dt} \qquad I_1 = \frac{dQ_6}{dt}$$

$$\frac{dQ_{10}}{dt} \longrightarrow 0$$

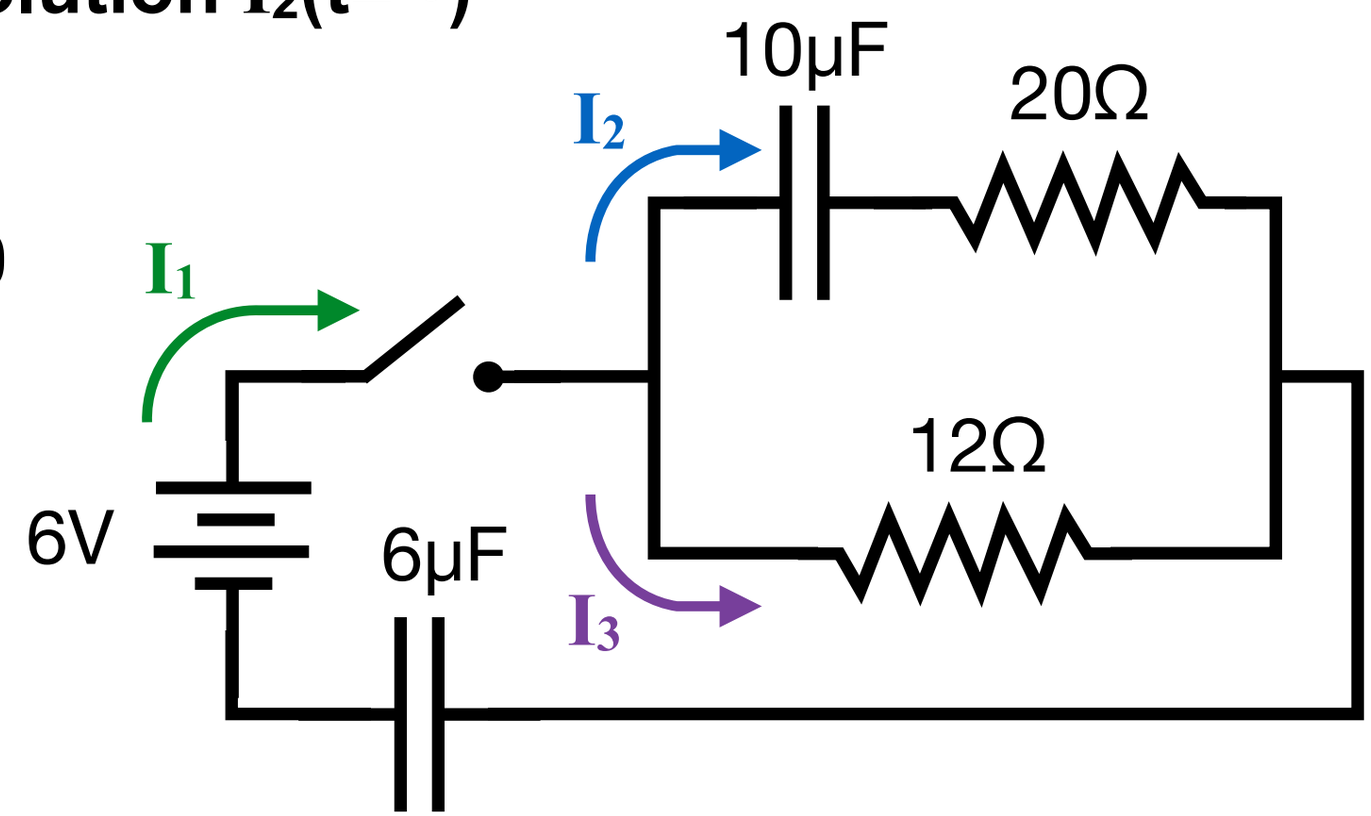

After a very long time, what is the current I_2?

1. 0 A
2. 0.2 A
3. 0.3 A
4. 0.5 A
5. 0.8 A

Complex RC Circuit

Solution $Q_6(t=\infty)$

$$+ 6V - \frac{Q_{10}}{10\mu} - 20\, I_2 - \frac{Q_6}{6\mu} = 0$$

$$+ 6V - 12\, I_3 - \frac{Q_6}{6\mu} = 0$$

$$- \frac{Q_{10}}{10\mu} - 20\, I_2 + 12\, I_3 = 0$$

$$I_1 = I_2 + I_3$$

$$I_2 = \frac{dQ_{10}}{dt} \qquad I_1 = \frac{dQ_6}{dt}$$

$$+ 6V - 0 - (Q_6/6\mu) = 0$$

$$+ 6V = (Q_6/6\mu)$$

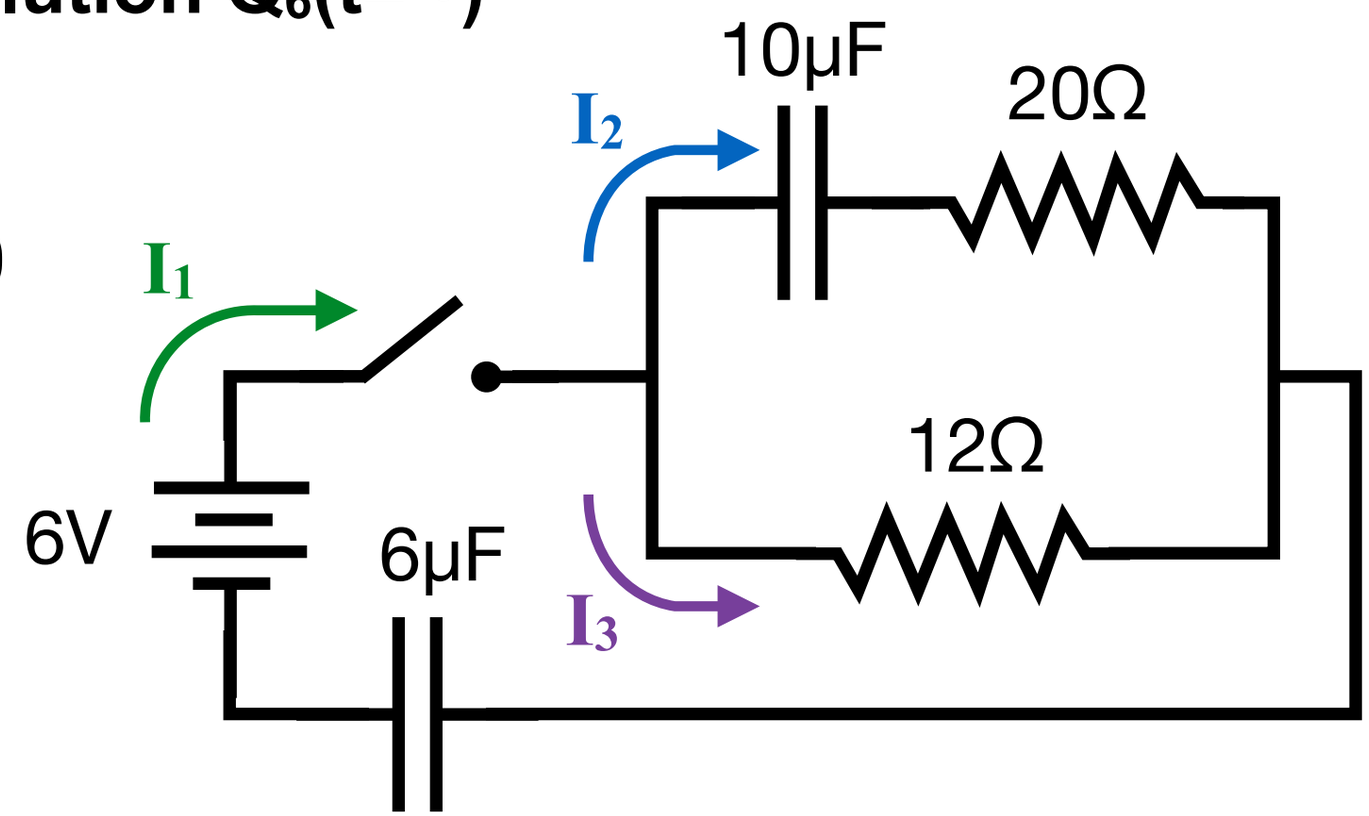

After a very long time, what is the charge on the 6μF capacitor?

1. 0 μC
2. 1 μC
3. 6 μC
4. 36 μC
5. 60 μC

Complex RC Circuit

Solution $Q_{10}(t=\infty)$

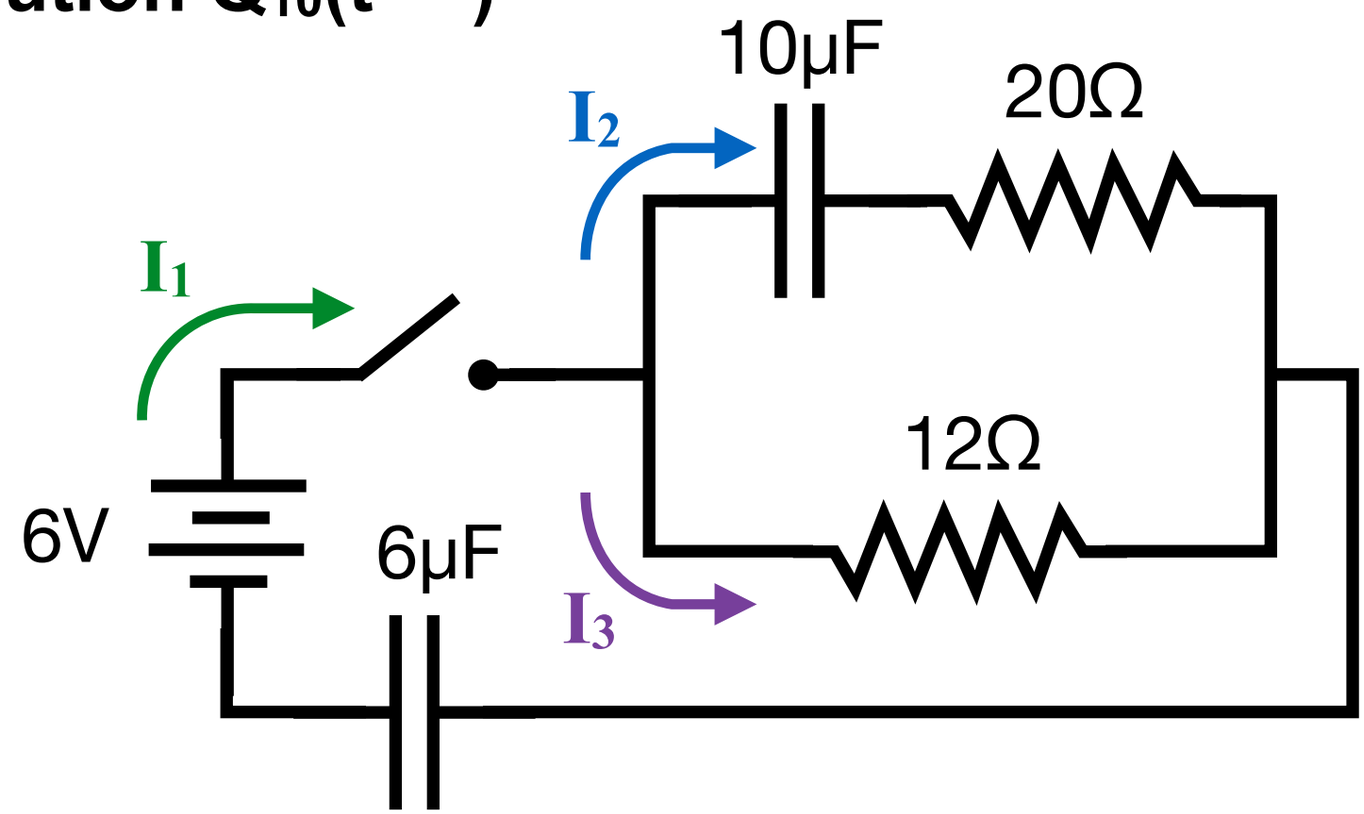

$$+ 6V - \frac{Q_{10}}{10\mu} - 20\, I_2 - \frac{Q_6}{6\mu} = 0$$

$$+ 6V - 12\, I_3 - \frac{Q_6}{6\mu} = 0$$

$$- \frac{Q_{10}}{10\mu} - 20\, I_2 + 12\, I_3 = 0$$

$$I_1 = I_2 + I_3$$

$$I_2 = \frac{dQ_{10}}{dt} \qquad I_1 = \frac{dQ_6}{dt}$$

$$-(Q_{10}/10\mu) - 0 - 0 = 0$$

After a very long time, what is the charge on the 10μF capacitor?

1. 0 μC
2. 1 μC
3. 6 μC
4. 36 μC
5. 60 μC

Complex RC Circuit

Graphs

After ~0.05ms

$\frac{dQ_{10}}{dt} < 0$

$V_{20} < 0$

I_2 changes directions!

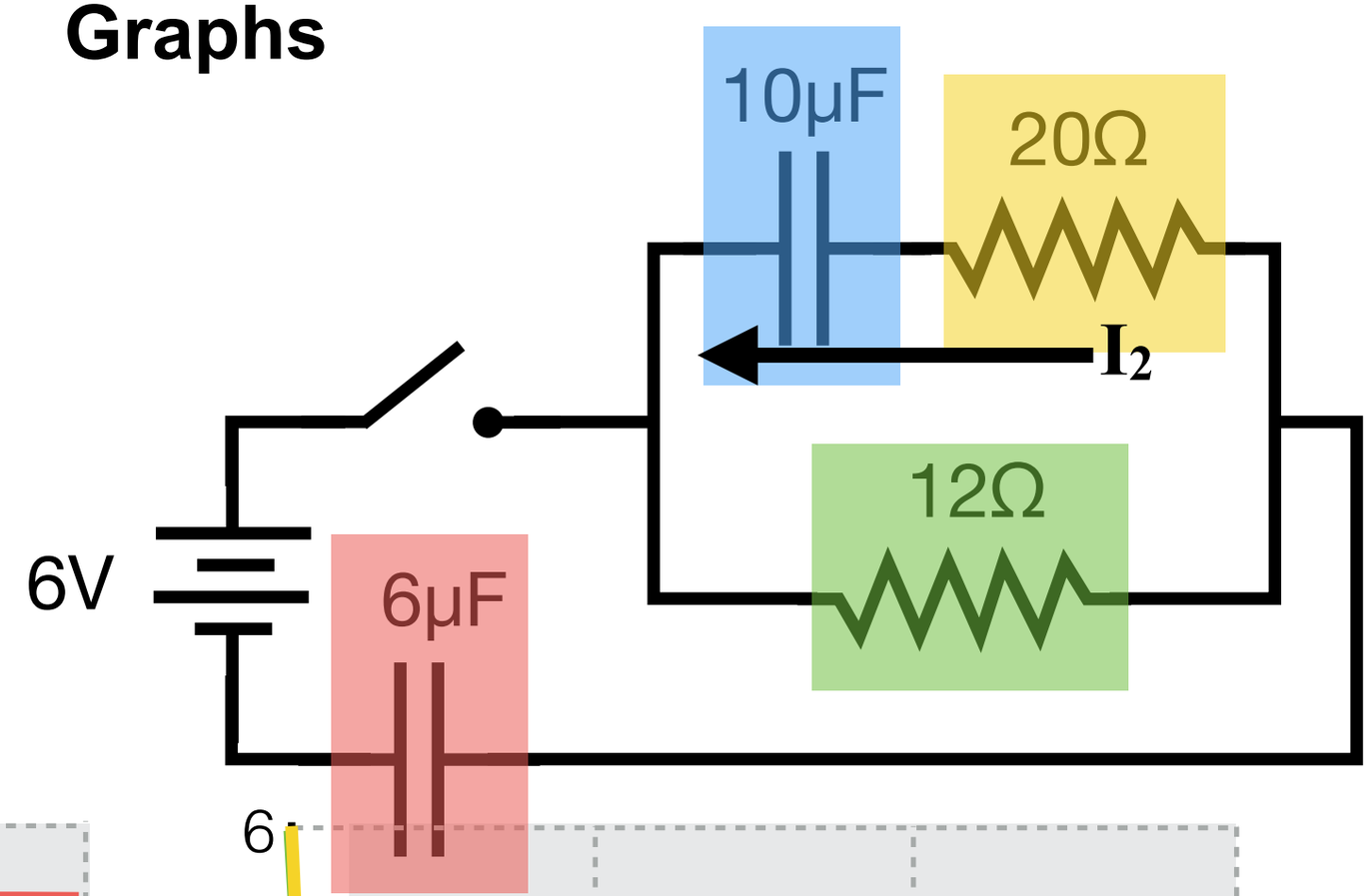

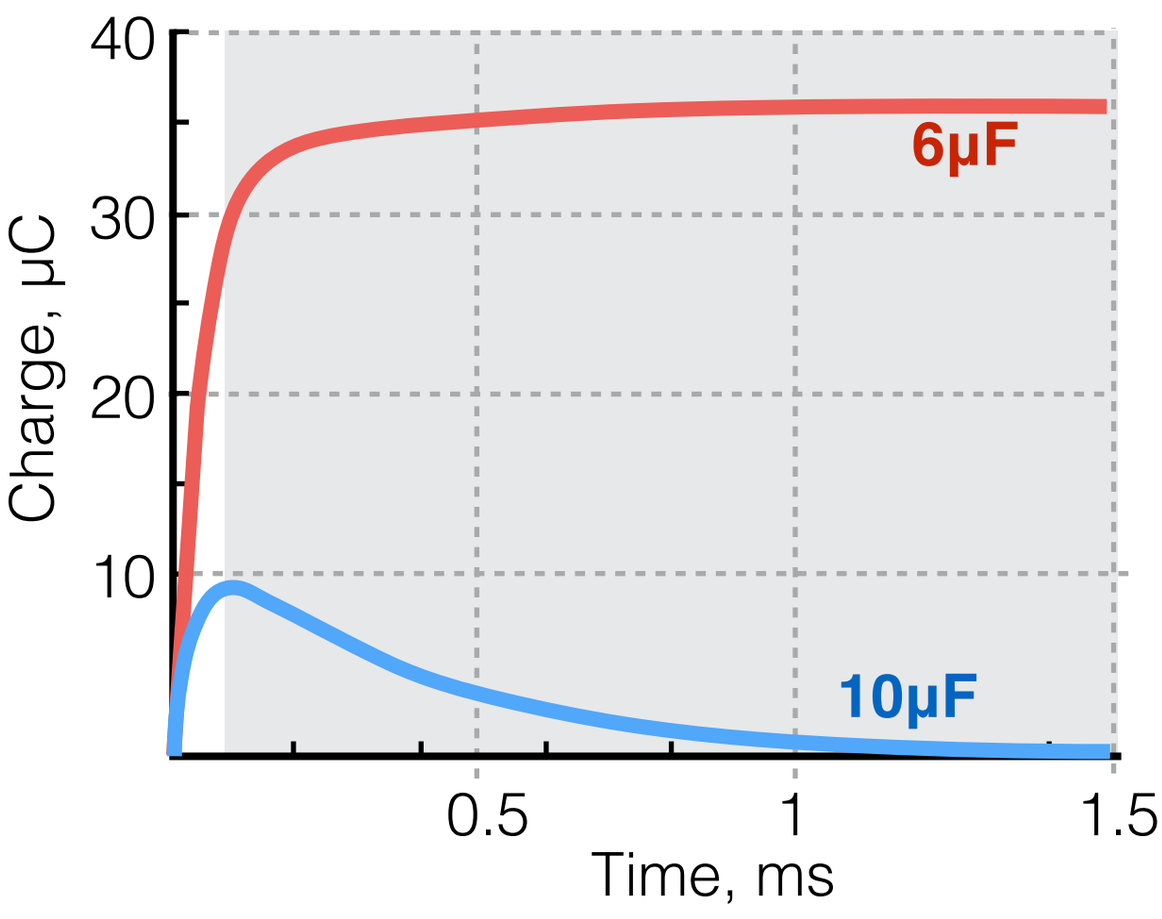

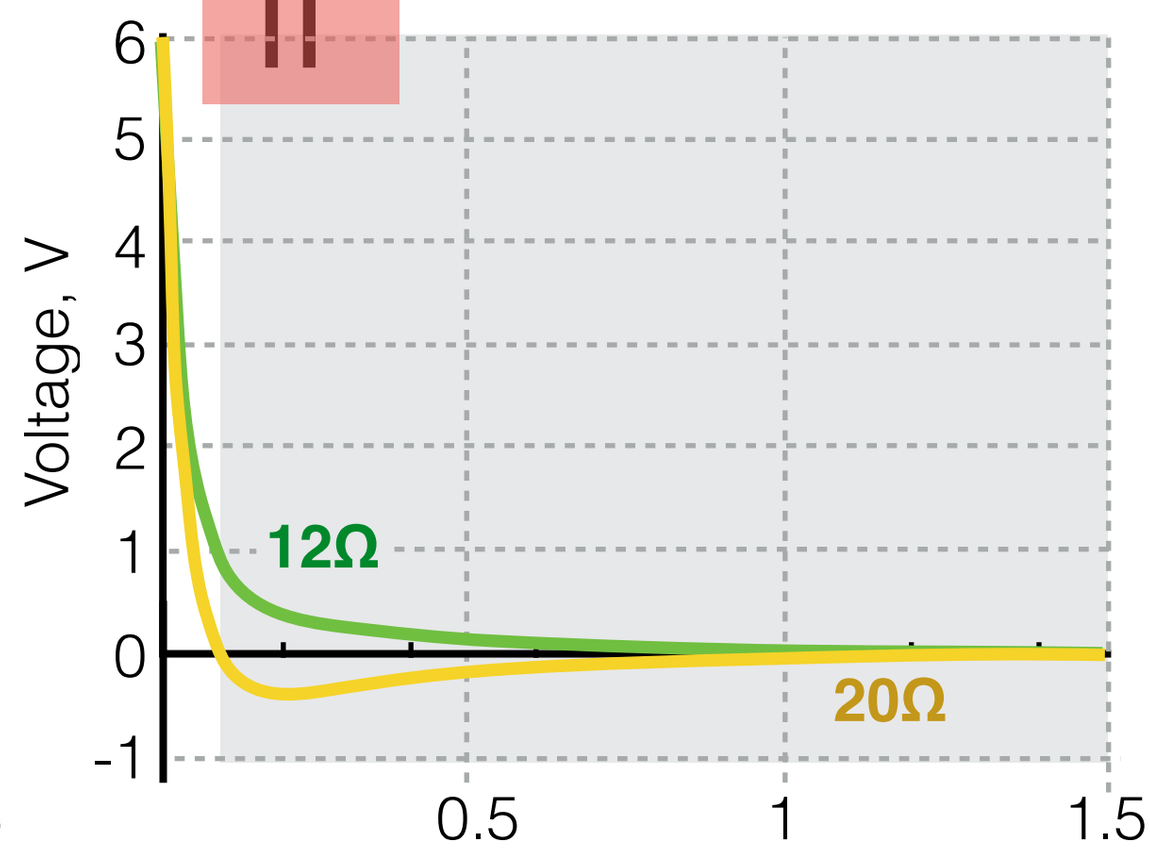

Pre-class Slides

Complex RC Circuit Analysis

§ —
Lecture 19

Youtube Playlist

Solving Complex Circuits

1. **Draw** (guess) direction of **currents** in each part of the circuit. Name the currents.
2. **Label sides** of circuit elements (resistors, capacitors) with a high-voltage and low-voltage side
3. Use Kirchoff's **Loop Rule** to write equations for the voltage sum around each loop in the circuit.
4. Use Kirchoff's **Junction Rule** to write equations for the currents at each junction
5. Use **Ohm's law** to relate currents and voltages (<u>or capacitance definition to relate current & charge</u>)
6. **Solve** your system of equations (or differential equation!)

Starting Circuit Redux!

Find a system of equations that tells us the behavior of this circuit.

1. Draw Currents
2. Label sides
3. Loop Rule

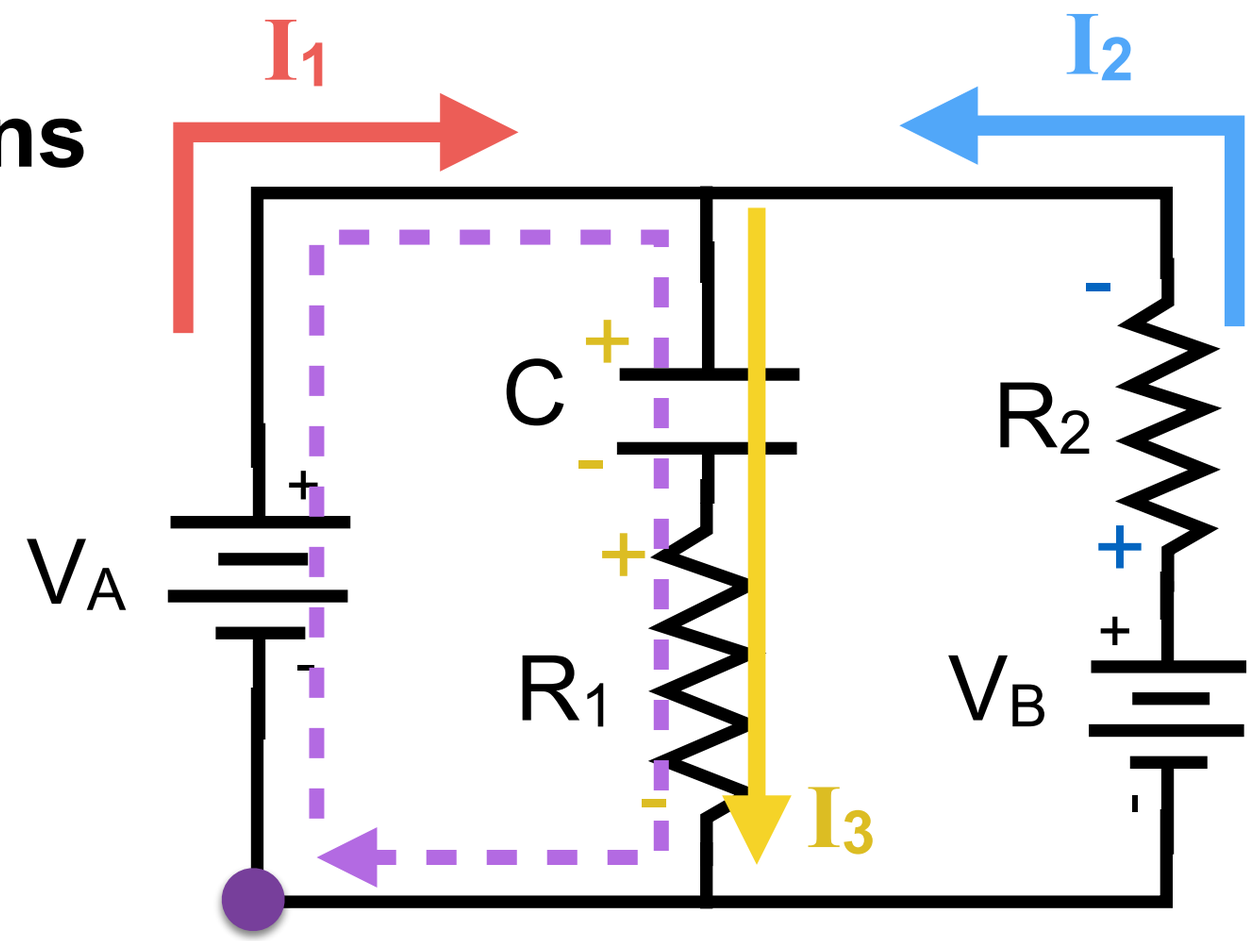

Which equation correctly uses the loop rule for the **left loop**?

1. ~~$V_A + V_C - V_1 = 0$~~
2. ~~$V_A - V_C + V_1 = 0$~~
3. ~~$V_A - V_C + V_2 = 0$~~
4. $V_A - V_C - V_1 = 0$
5. ~~$V_A - V_C - V_2 = 0$~~

Starting Circuit Redux!

Continued…

Find a system of equations that tells us the behavior of this circuit.

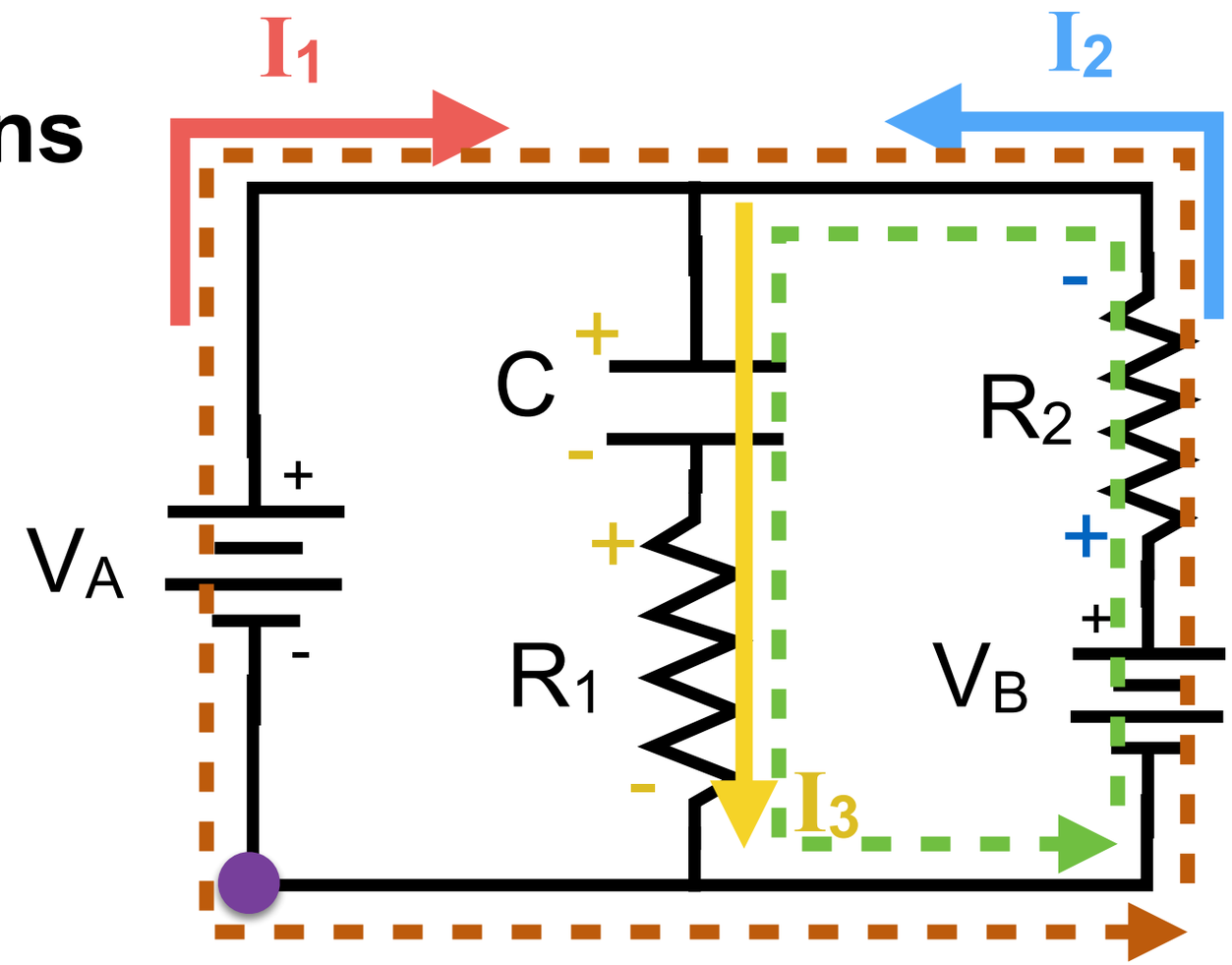

1. Draw Currents

2. Label sides

3. Loop Rule

$V_A - V_C - V_1 = 0$

$V_B - V_2 - V_C - V_1 = 0$

$V_B - V_2 - V_A = 0$

4. Junction Rule

$I_3 = I_1 + I_2$

Starting Circuit Redux!

Still Continued…

Find a system of equations that tells us the behavior of this circuit.

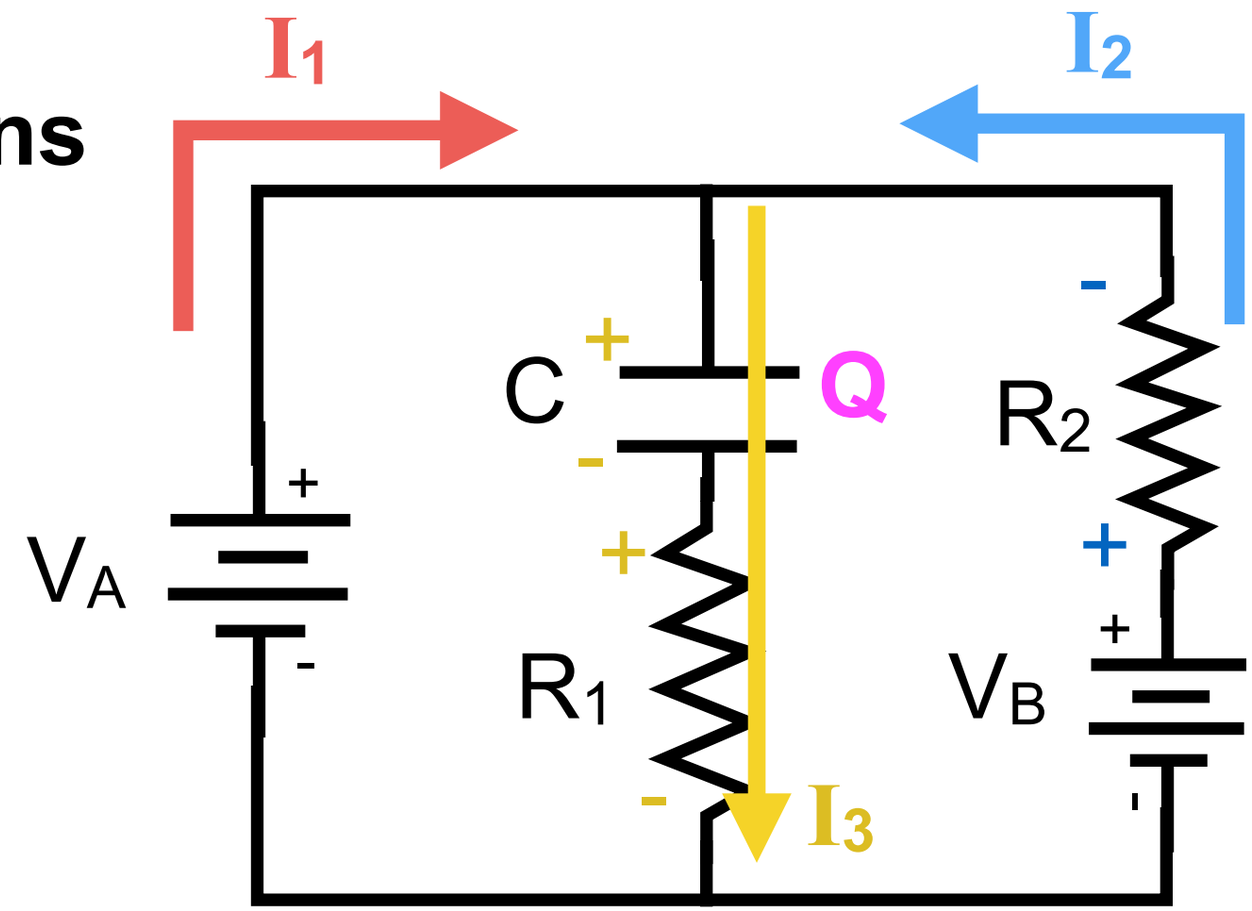

5. Ohm's Law & Cap Def.

$$V_A - \frac{Q}{C} - I_3R_1 = 0$$

$$V_B - I_2R_2 - \frac{Q}{C} - I_3R_1 = 0$$

$$V_B - I_2R_2 - V_A = 0$$

$$I_3 = I_1 + I_2$$

$$I_3 = \frac{dQ}{dt}$$

6. Solve

Solving at Specific Times

At t = 0

If Q=0 when the circuit is first completed (t=0), what are the currents?

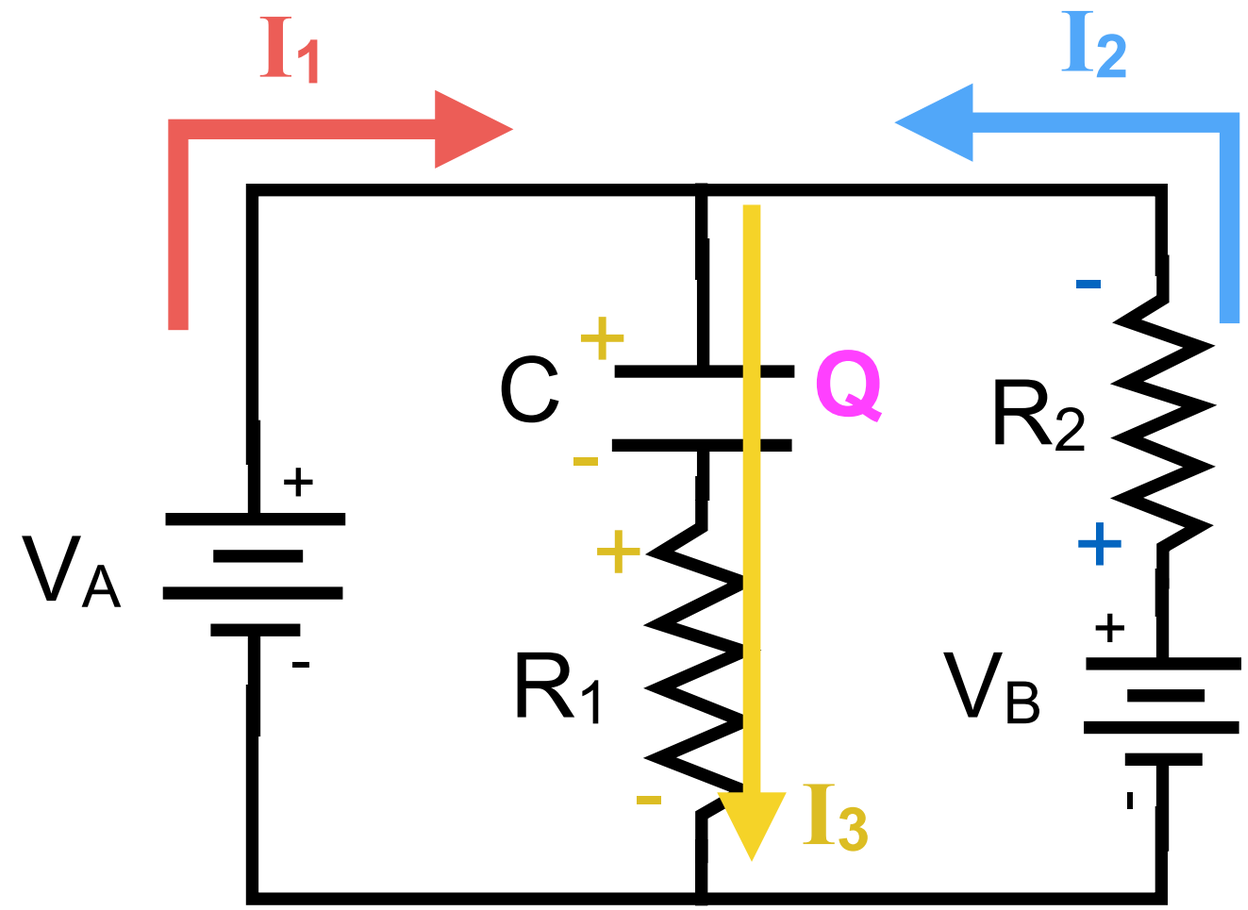

$$V_A - \frac{Q}{C} - I_3R_1 = 0$$

$$V_B - I_2R_2 - \frac{Q}{C} - I_3R_1 = 0$$

$$V_B - I_2R_2 - V_A = 0$$

$$I_3 = I_1 + I_2$$

$$I_3 = \frac{dQ}{dt}$$

$$V_A - I_3R_1 = 0$$

$$V_A = I_3R_1$$

What is I_3?

1. V_A / R_1
2. V_B / R_2
3. $V_B / (R_2+R_1)$
4. $(V_B-V_A)/(R_2+R_1)$
5. $(V_A-V_B)/(R_2+R_1)$

Solving at Specific Times

At t = 0 Solutions

If Q=0 when the circuit is first completed (t=0), what are the currents?

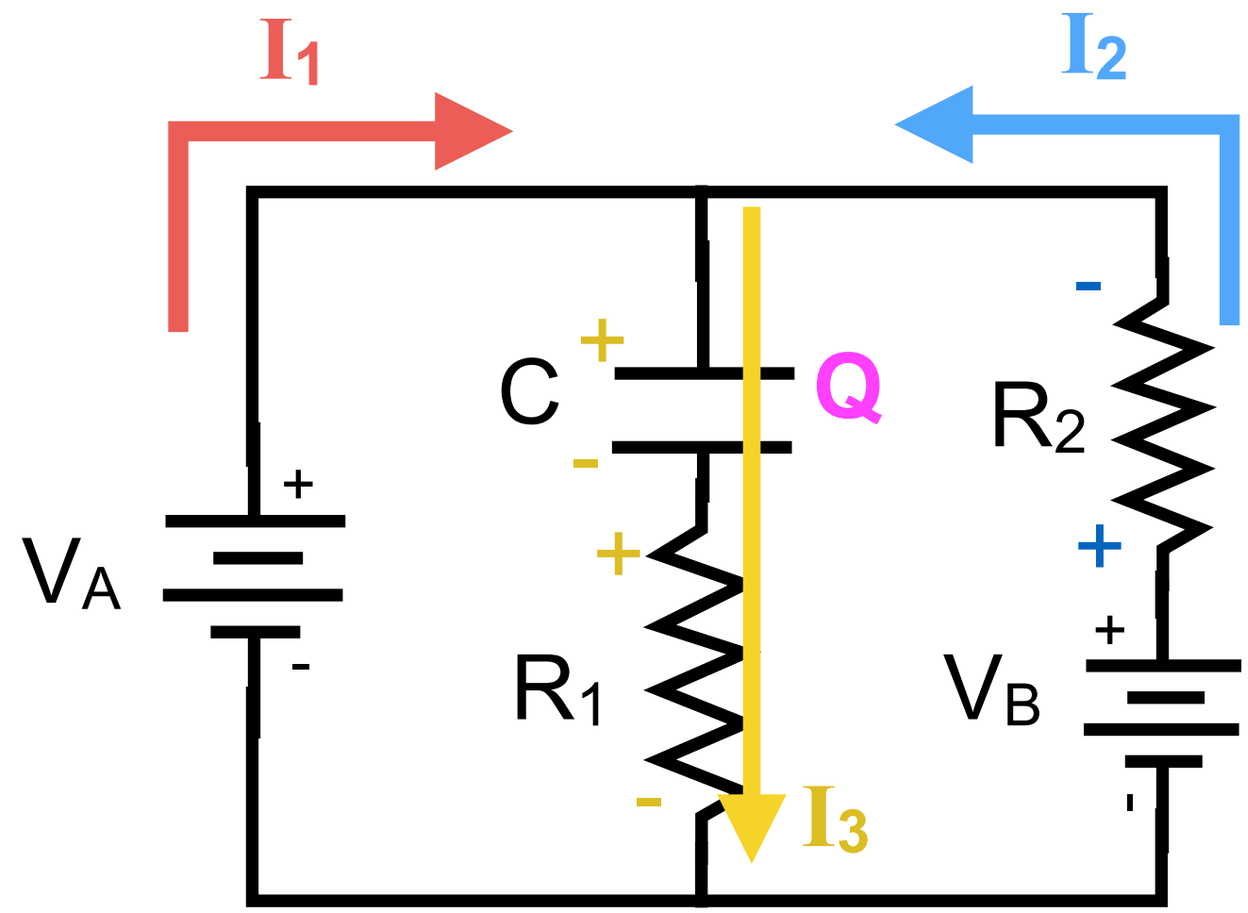

$$V_A - \frac{Q}{C} - I_3R_1 = 0$$

$$V_B - I_2R_2 - \frac{Q}{C} - I_3R_1 = 0$$

$$V_B - I_2R_2 - V_A = 0$$

$$I_3 = I_1 + I_2$$

$$I_3 = \frac{dQ}{dt}$$

$$I_3 = V_A / R_1$$

$$V_B - I_2R_2 - V_A = 0$$

$$V_B - V_A = I_2R_2$$

$$(V_B - V_A) / R_2 = I_2$$

$$I_3 = I_1 + I_2$$

$$I_3 - I_2 = I_1$$

$$\frac{V_A}{R_1} - \frac{V_B - V_A}{R_2} = I_1$$

Solving at Specific Times

As t → ∞

What is Q when the capacitor is fully charged? What are the currents?

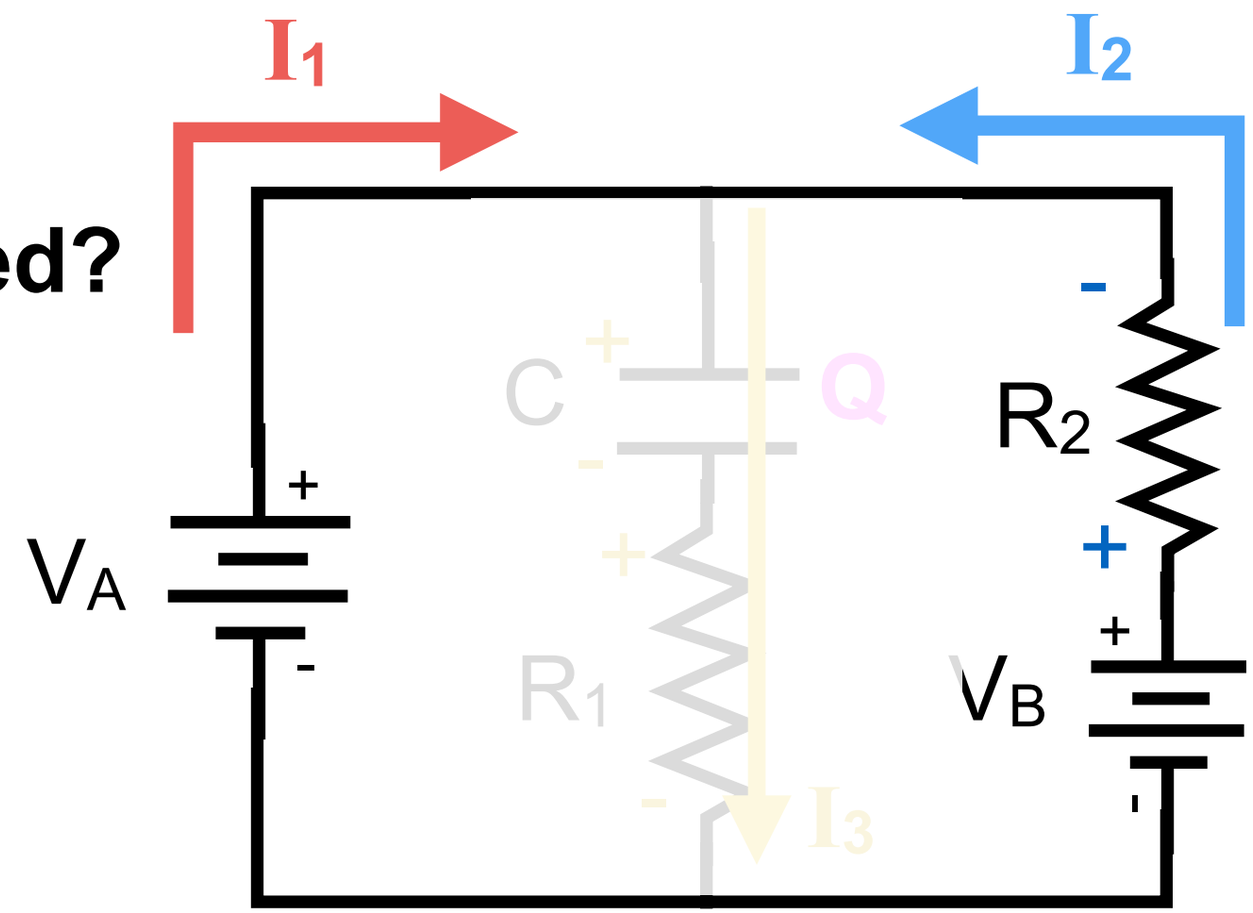

$$V_A - \frac{Q}{C} - 0 = 0$$

$$V_B - I_2R_2 - \frac{Q}{C} - 0 = 0$$

$$V_B - I_2R_2 - V_A = 0$$

$$I_3 = I_1 + I_2$$

$$I_3 = \frac{dQ}{dt} = 0$$

$$V_A - \frac{Q}{C} = 0$$

$$V_A = \frac{Q}{C}$$

$$Q = C\,V_A$$

Solving at Specific Times

As t → ∞ Currents

What is Q when the capacitor is fully charged? What are the currents?

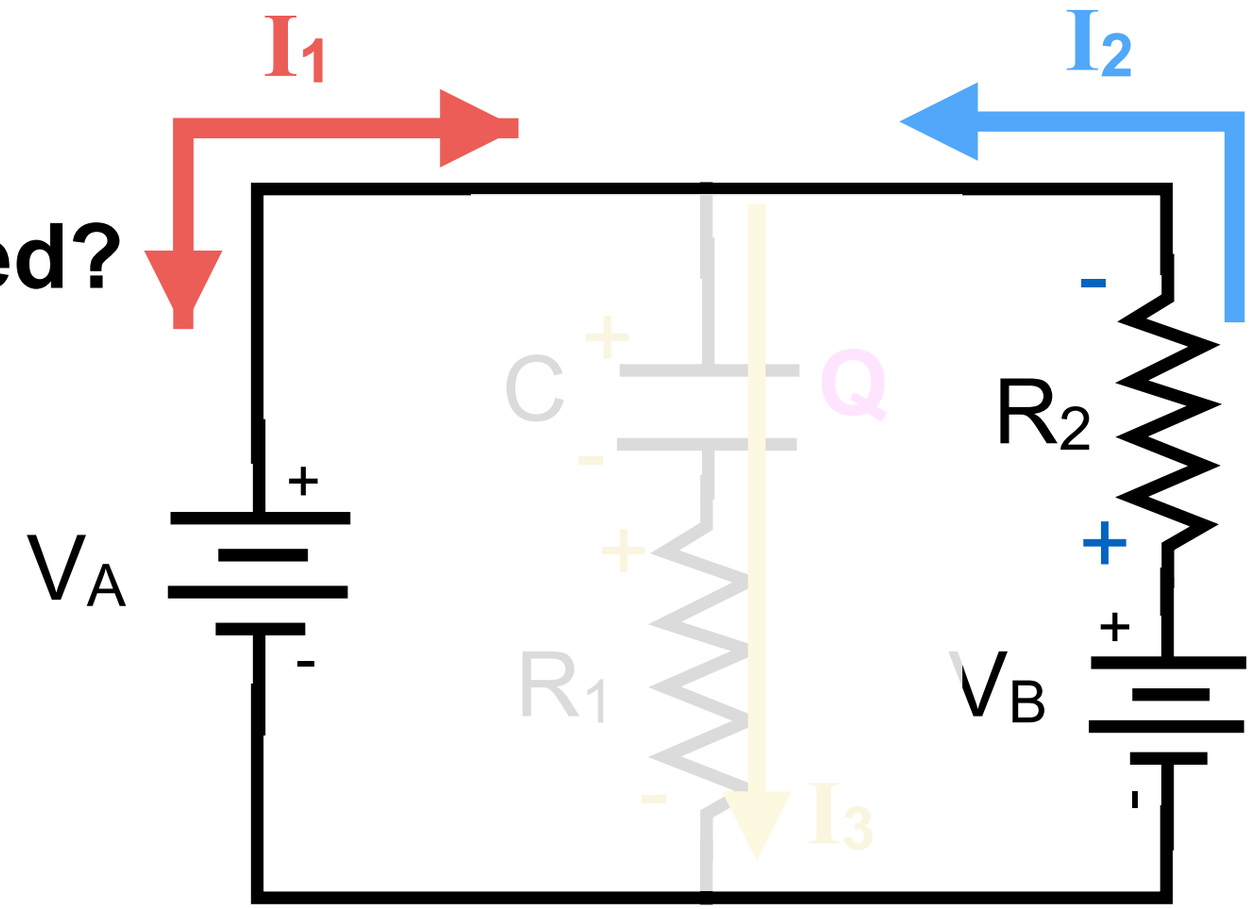

$$V_A - \frac{Q}{C} - 0 = 0$$

$$V_B - I_2R_2 - \frac{Q}{C} - 0 = 0$$

$$V_B - I_2R_2 - V_A = 0$$

$$I_3 = I_1 + I_2 \longrightarrow I_1 = -I_2$$

What does the negative mean?

$$I_3 = \frac{dQ}{dt} = 0$$

$$Q = C\,V_A$$

1. Nothing, just drop it
2. Current I_1 in wrong direction
3. Capacitor is discharging
4. I_1 and I_2 cancel for no current

Solving at Specific Times

As t → ∞ Solutions

What is Q when the capacitor is fully charged? What are the currents?

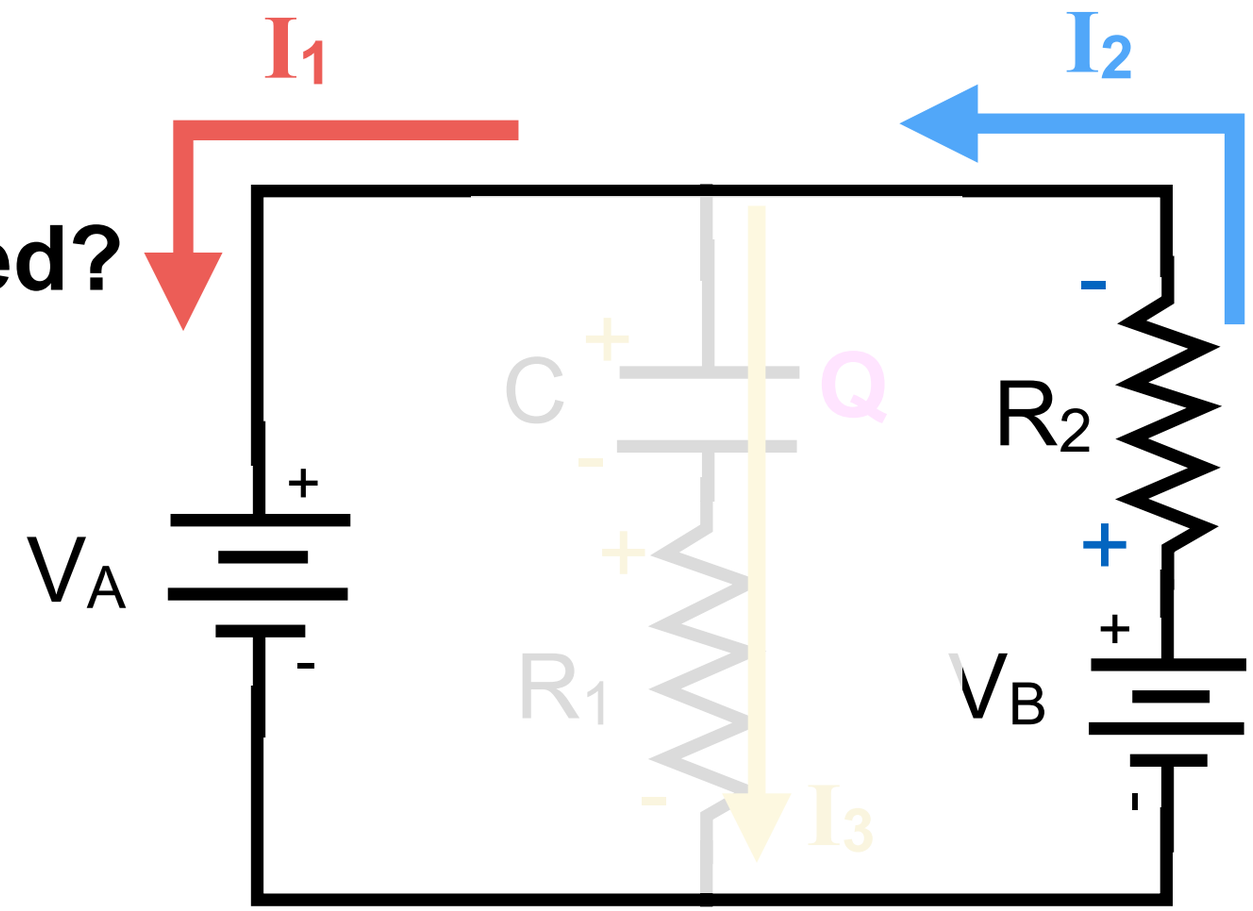

$$V_A - \frac{Q}{C} - 0 = 0$$

$$V_B - I_2R_2 - \frac{Q}{C} - 0 = 0$$

$$V_B - I_2R_2 - V_A = 0$$

$$I_3 = I_1 + I_2 \longrightarrow I_1 = -I_2$$

$$I_3 = \frac{dQ}{dt} = 0$$

$$Q = C\,V_A$$

$$(V_B - V_A) / R_2 = I_2$$

Capacitor blocks current down the junction : I_1 and I_2 become the same current

$$I_2 = I_1$$
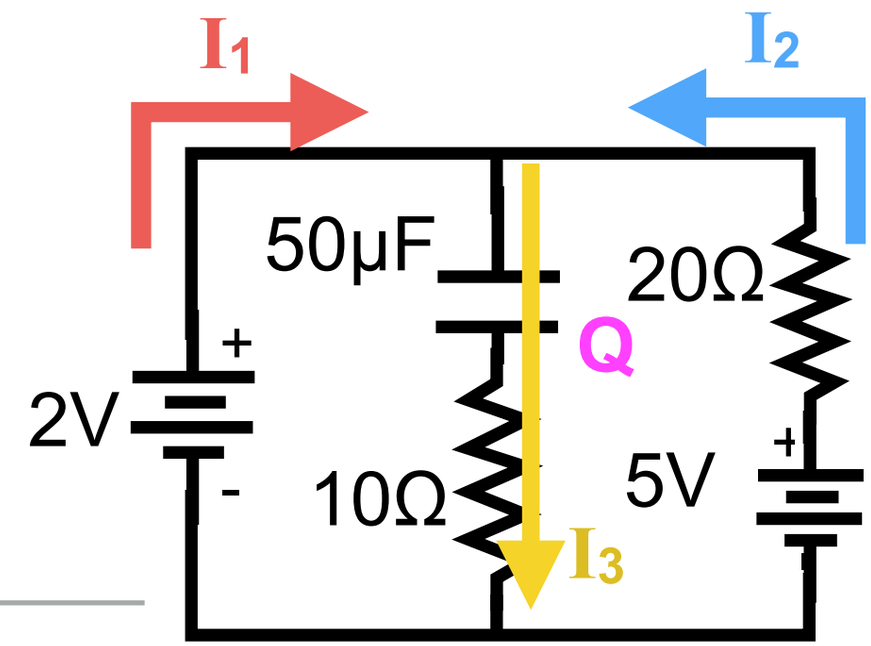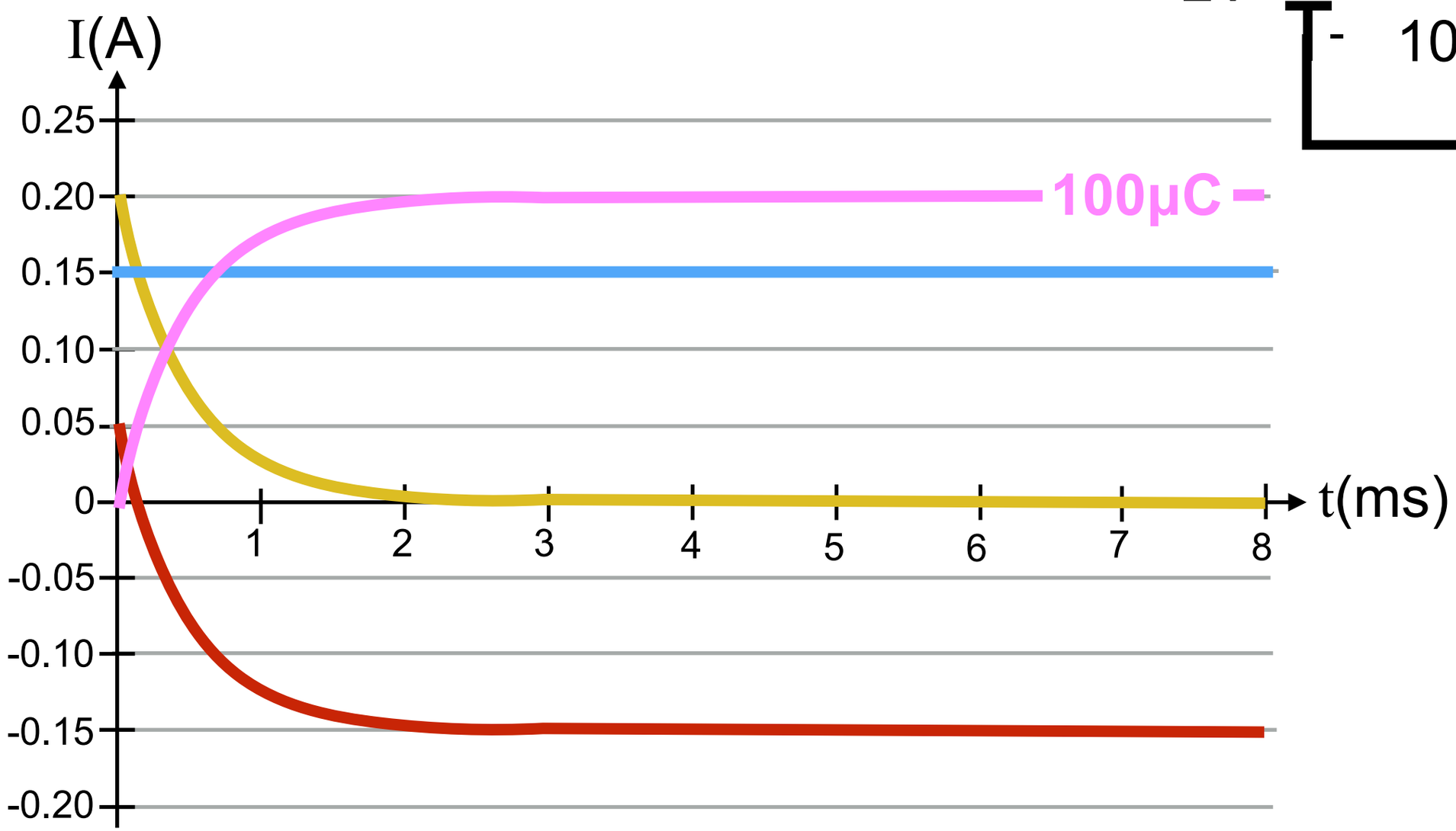
Numerical Simulation