August 9, 2023

Meet at **noon** tomorrow!

12pm-1pm : **Lecture**

1pm-2pm : **Studio**

Reflection 7 : Due Friday by midnight

Conceptual HW 7 : Due Sunday by midnight

Office Hours

Mondays Noon-2pm

Thursdays 2-3pm

	Monday	Tuesday	Wednesday	Thursday	Friday
Week 6	July 31 V2 CH 10	Aug 1 Homework 5 Lab W6 - Resistivity	Aug 2 V2 CH 11	Aug 3 V2 CH 12 Studio : Circuits	Aug 4 Reflection Quiz 3&4: CH 8-10
Week 7	Aug 7 V2 CH 12	Aug 8 Homework 6 Lab W7 - DC Circuits	Aug 9 V2 CH 13	Aug 10 V2 CH 13 Studio : Magnetism	Aug 11 V2 CH 14 Reflection
Week 8	Aug 14 V2 CH 16	Aug 15 Homework 7 Lab W8 - EM Induction	Aug 16 V2 CH 16	Aug 17 Homework 8 Quiz 5&6: CH 12-16 Quiz 7&8: Cumulative	Aug 18 No Class Make up Lab Noon-2pm Make Up Lab 2-4pm

Chapter 13

Electromagnetic Induction

Faraday's & Lenz's Law

§ 13.1-2
Lecture 23

Resistor on Rails

A **resistor** can slide along **rails** inside a **magnetic field**

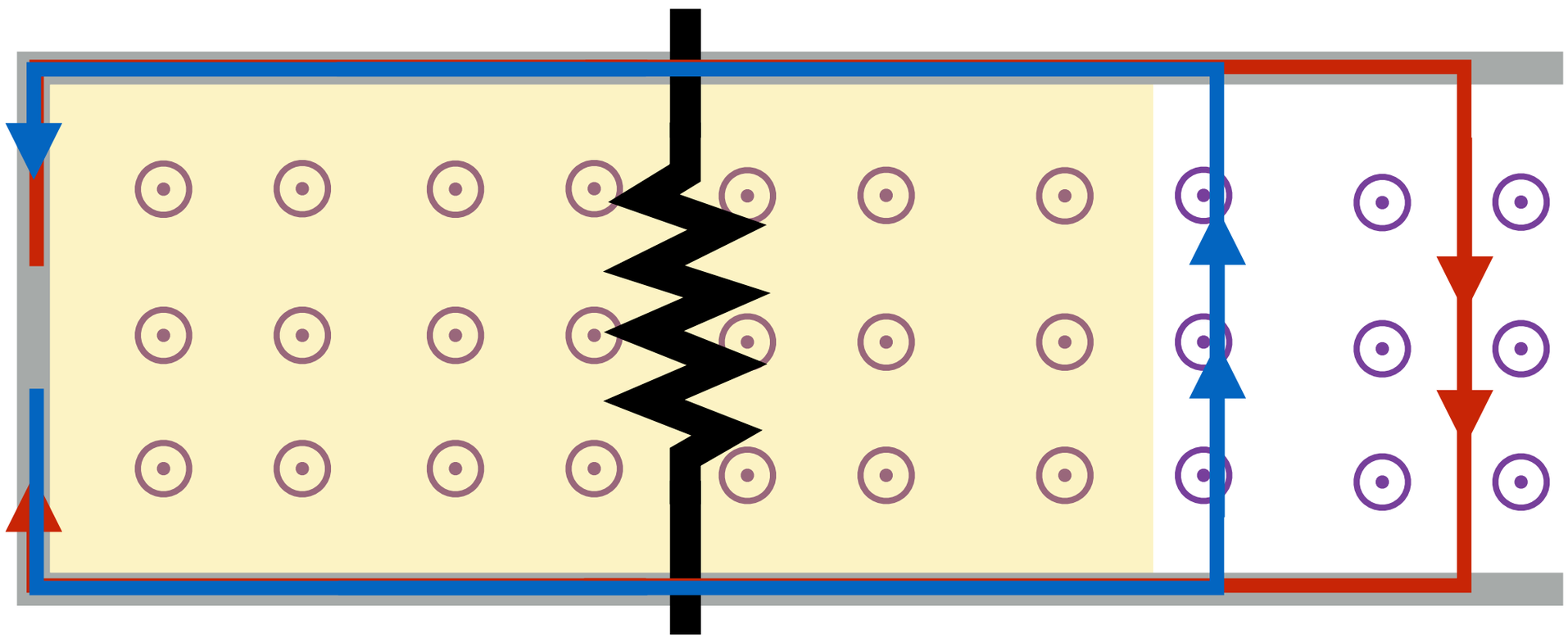

As the resistor slides to the left, what is the direction of the current in the resistor?

Down? **Up?**

Resistor on Rails

Flux Change

A **resistor** can slide along **rails** inside a **magnetic field**

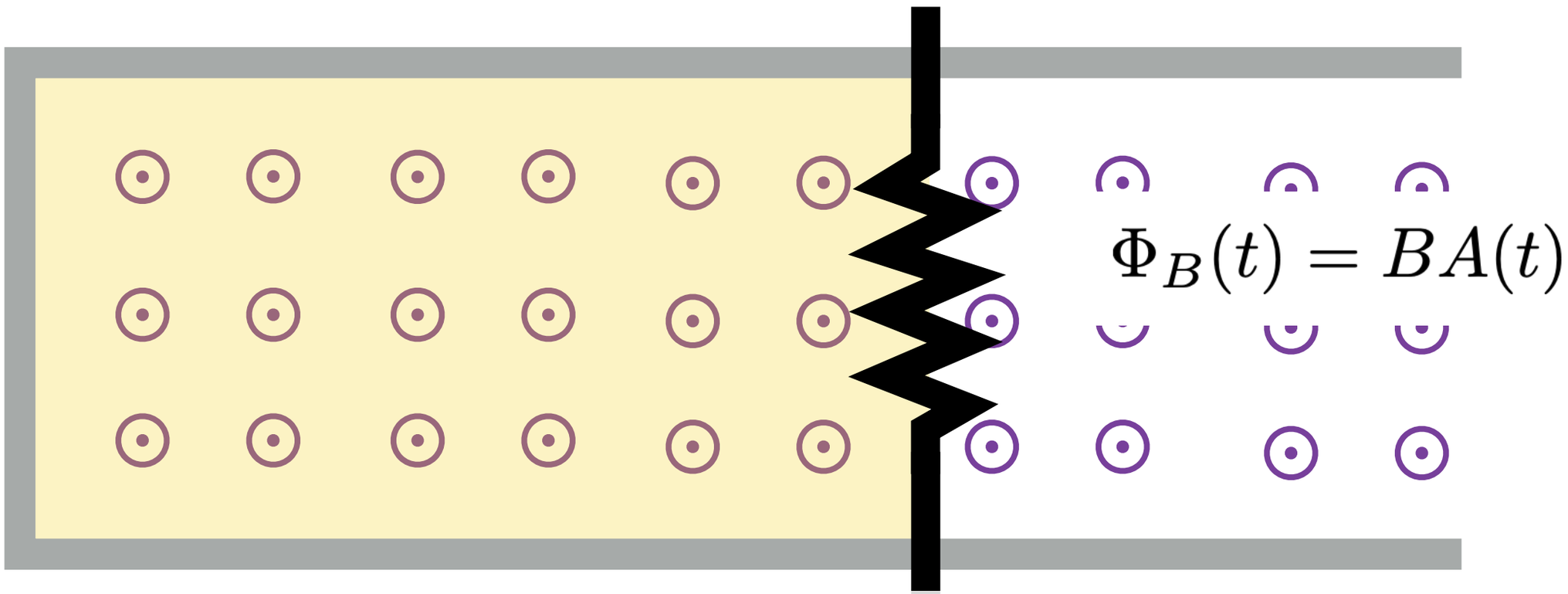

$$\Phi_B(t) = BA(t)$$

As the resistor moves to the left, the magnetic flux is…

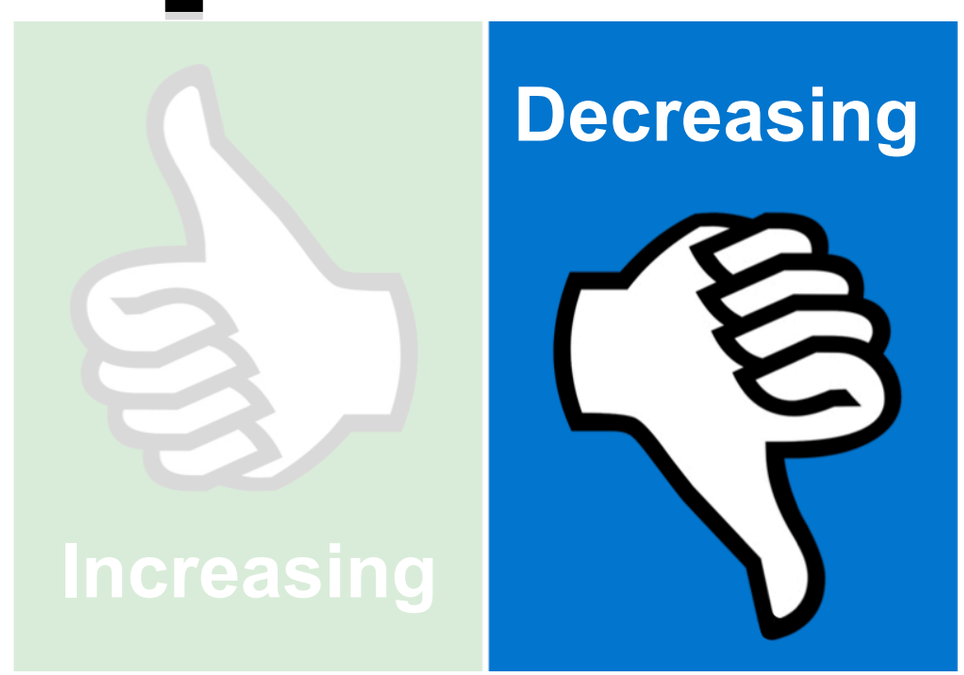

Resistor on Rails

Induced Field

A **resistor** can slide along **rails** inside a **magnetic field**

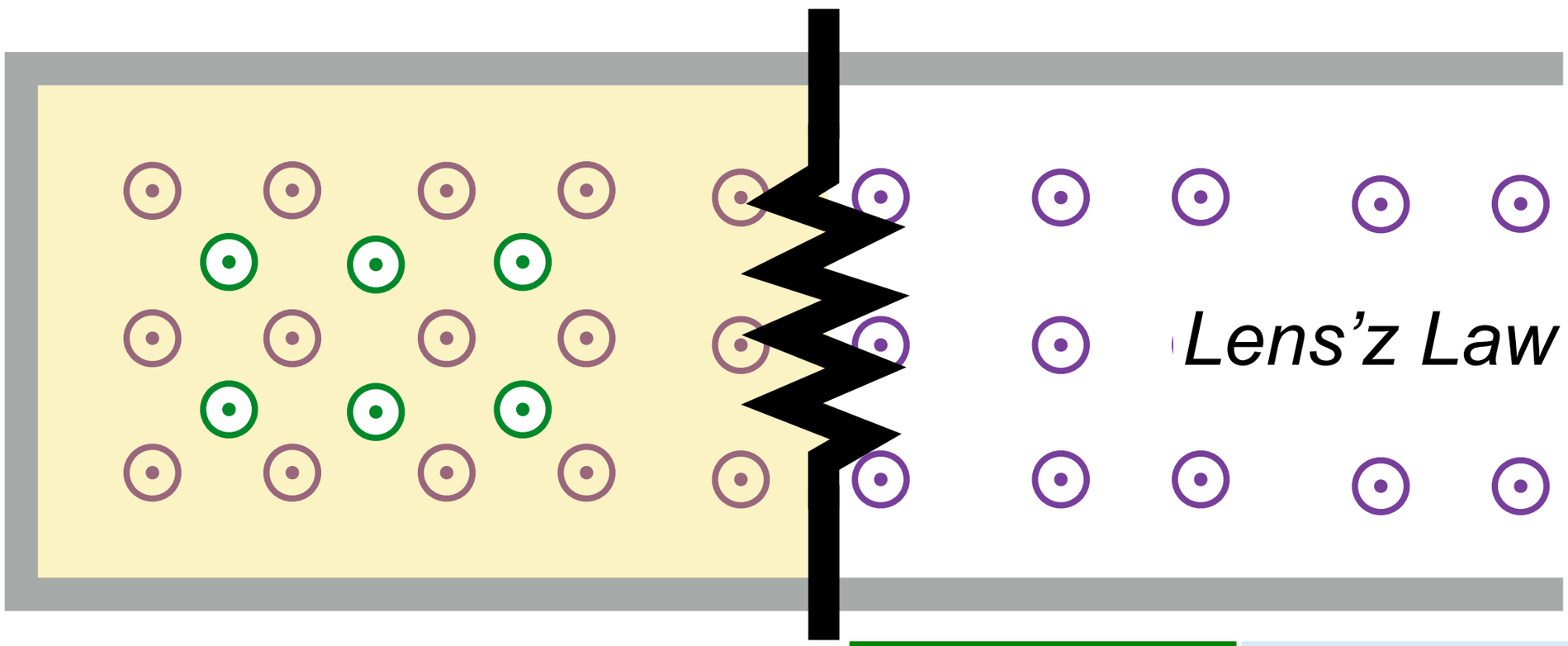

As the flux decreases, the induced magnetic field is in the _____ direction as the original field.

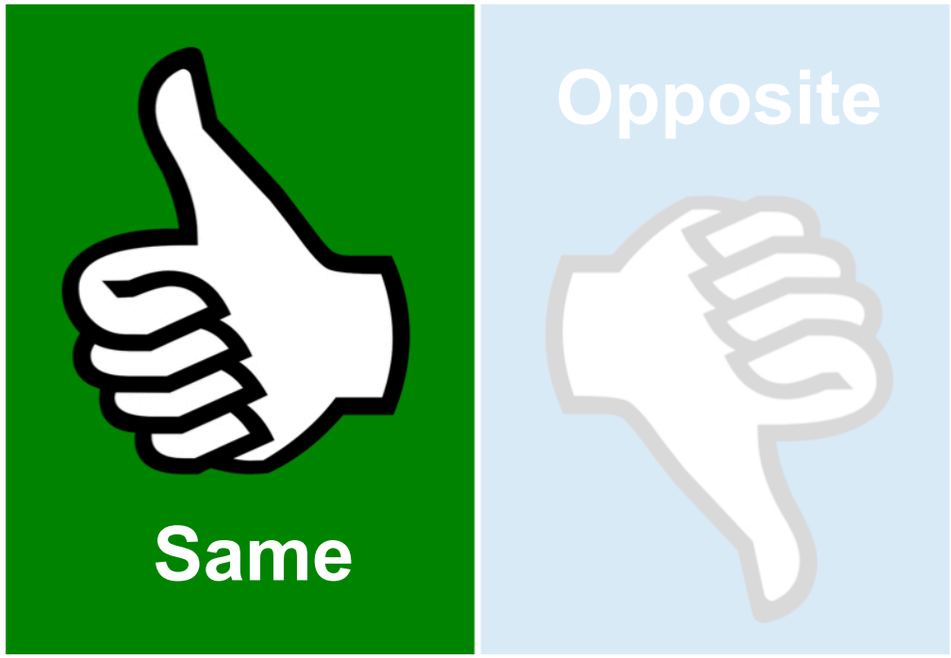

Resistor on Rails

Flux Change

A **resistor** can slide along **rails** inside a **magnetic field**

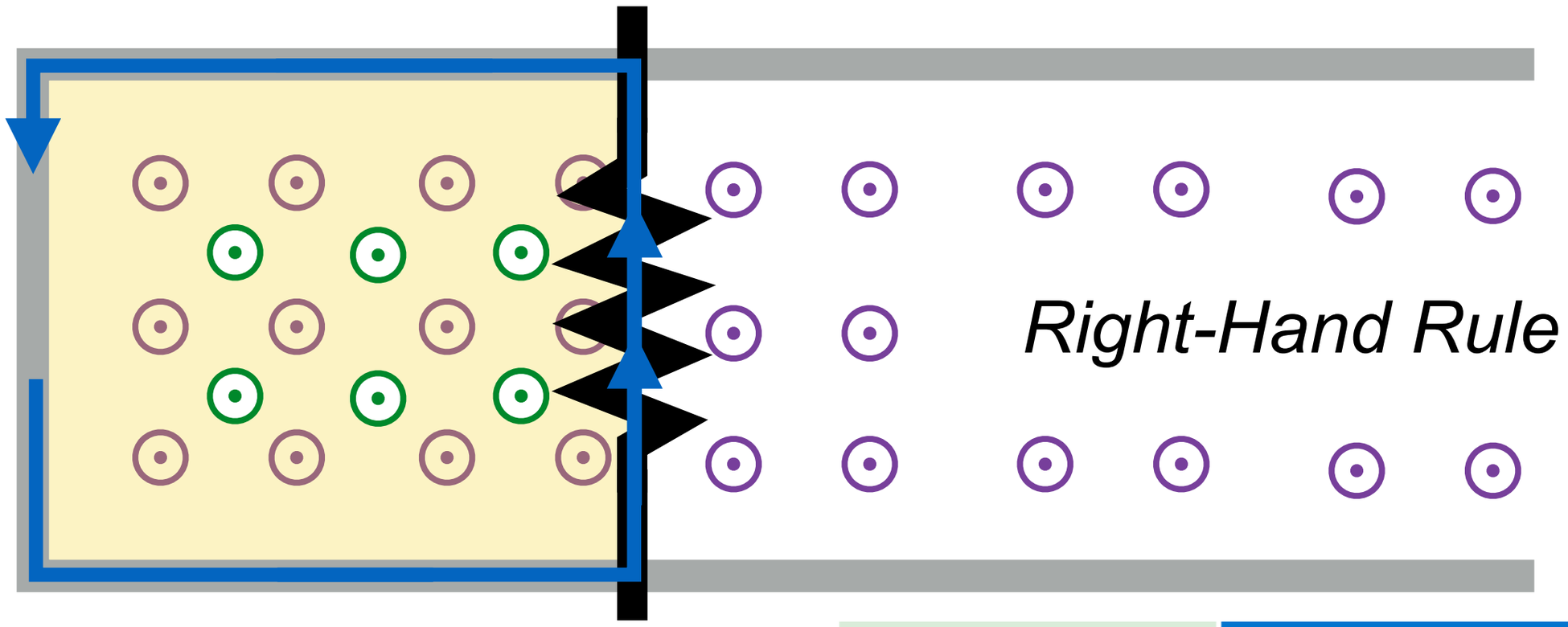

To produce a field out of the screen, the current goes _____ around the circuit.

Current is upward through the resistor.

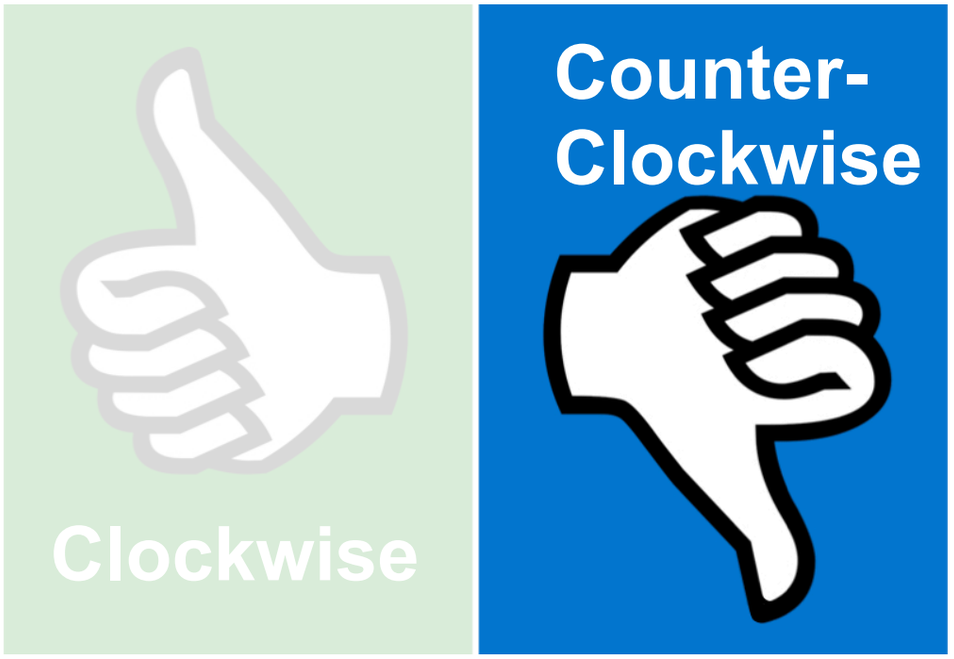

Resistor on Rails

Current Equation

A **resistor** can slide along **rails** inside a **magnetic field**

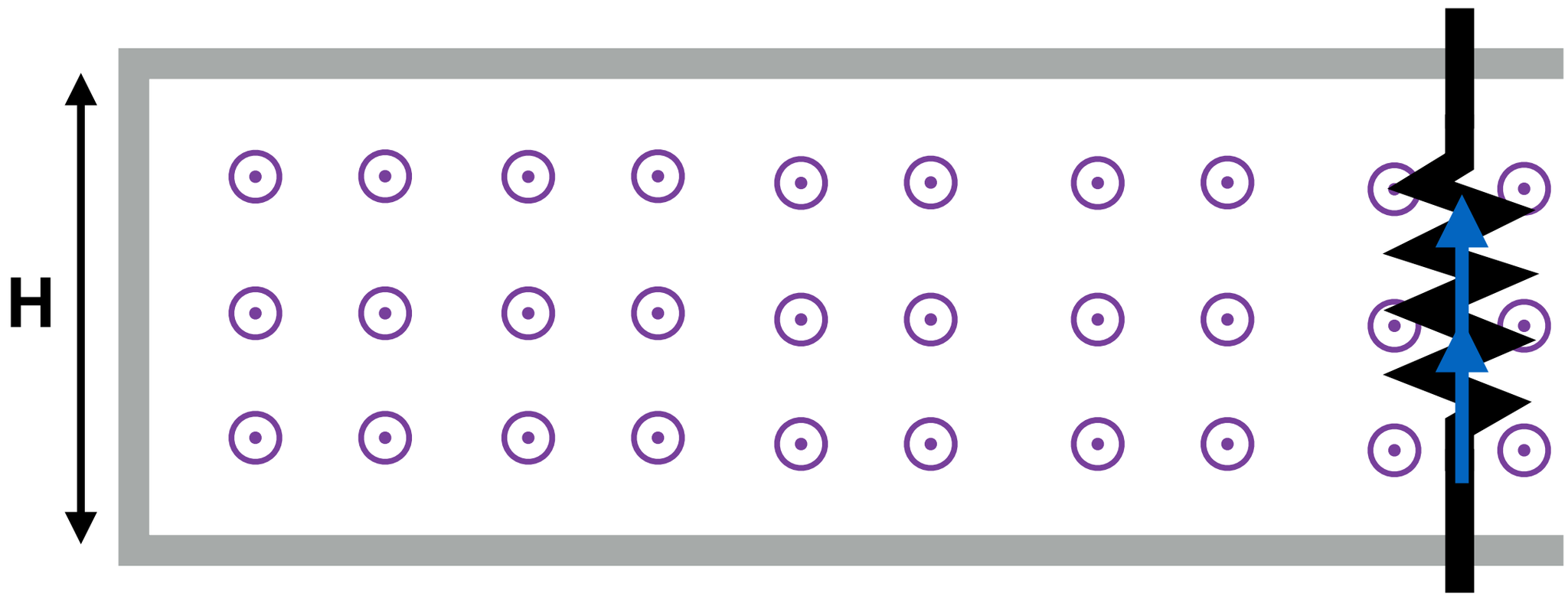

As the resistor slides to the left with constant speed v, what is *equation for the current* in the resistor if the rail height is H?

Resistor on Rails

Current Equation

A **resistor** can slide along **rails** inside a **magnetic field**

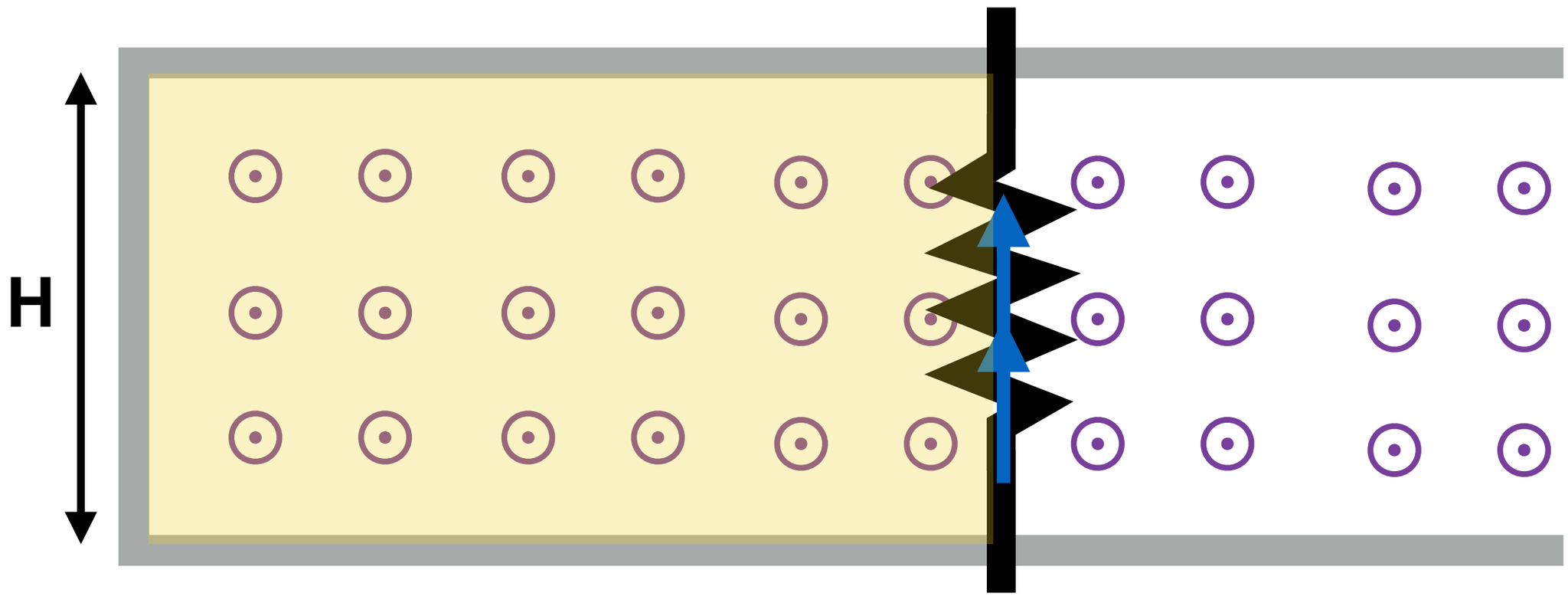

What is the magnetic flux through this area as a function of time?

$\Phi_B(t) = BA(t)$

$\Phi_B(t) = B\ H\ W(t)$

$\Phi_B(t) = B\ H\ [W_0 - v\ t]$

Resistor on Rails

Current Equation

A **resistor** can slide along **rails** inside a **magnetic field**

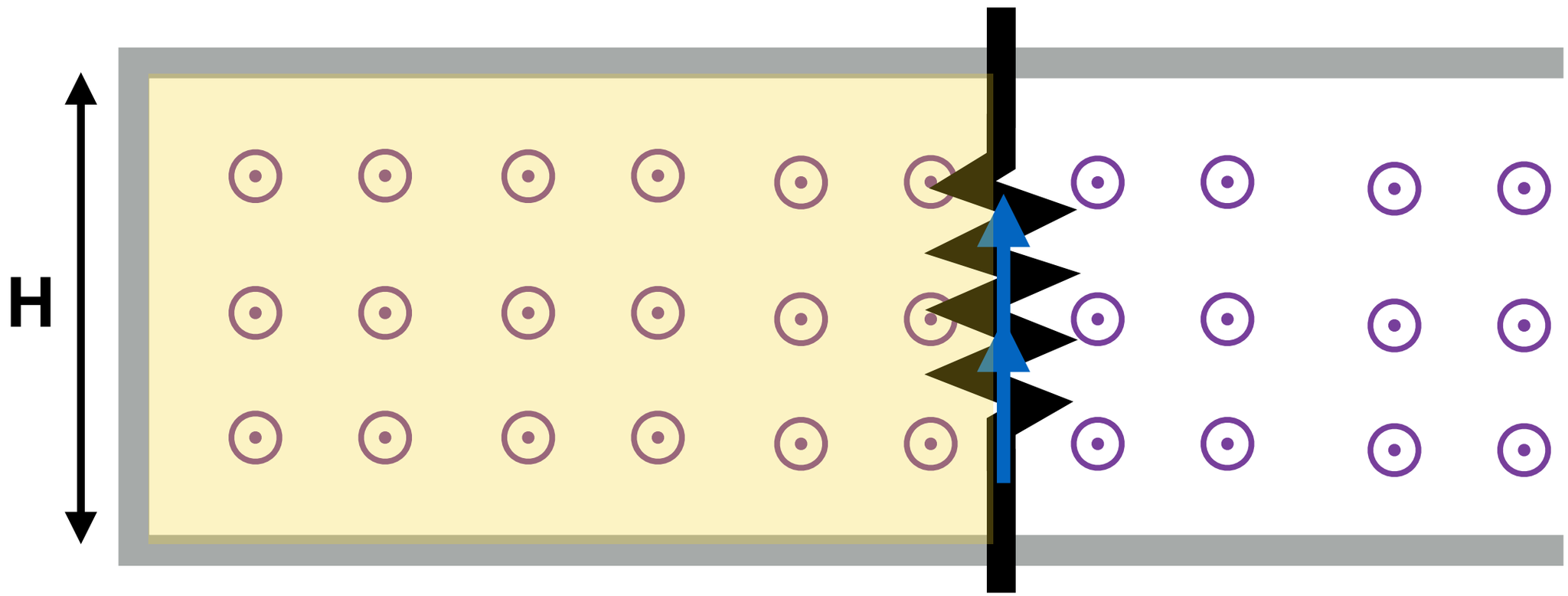

What is the current in the resistor as a function of time?

$I = \varepsilon / R \quad = B\,H\,v / R$

$\varepsilon = -\, d\Phi_B(t) / dt$

$\varepsilon = B\,H\,v$

Qi Charging

Wireless phone charging is based on Faraday's Law!

WIRELESS POWER CONSORTIUM

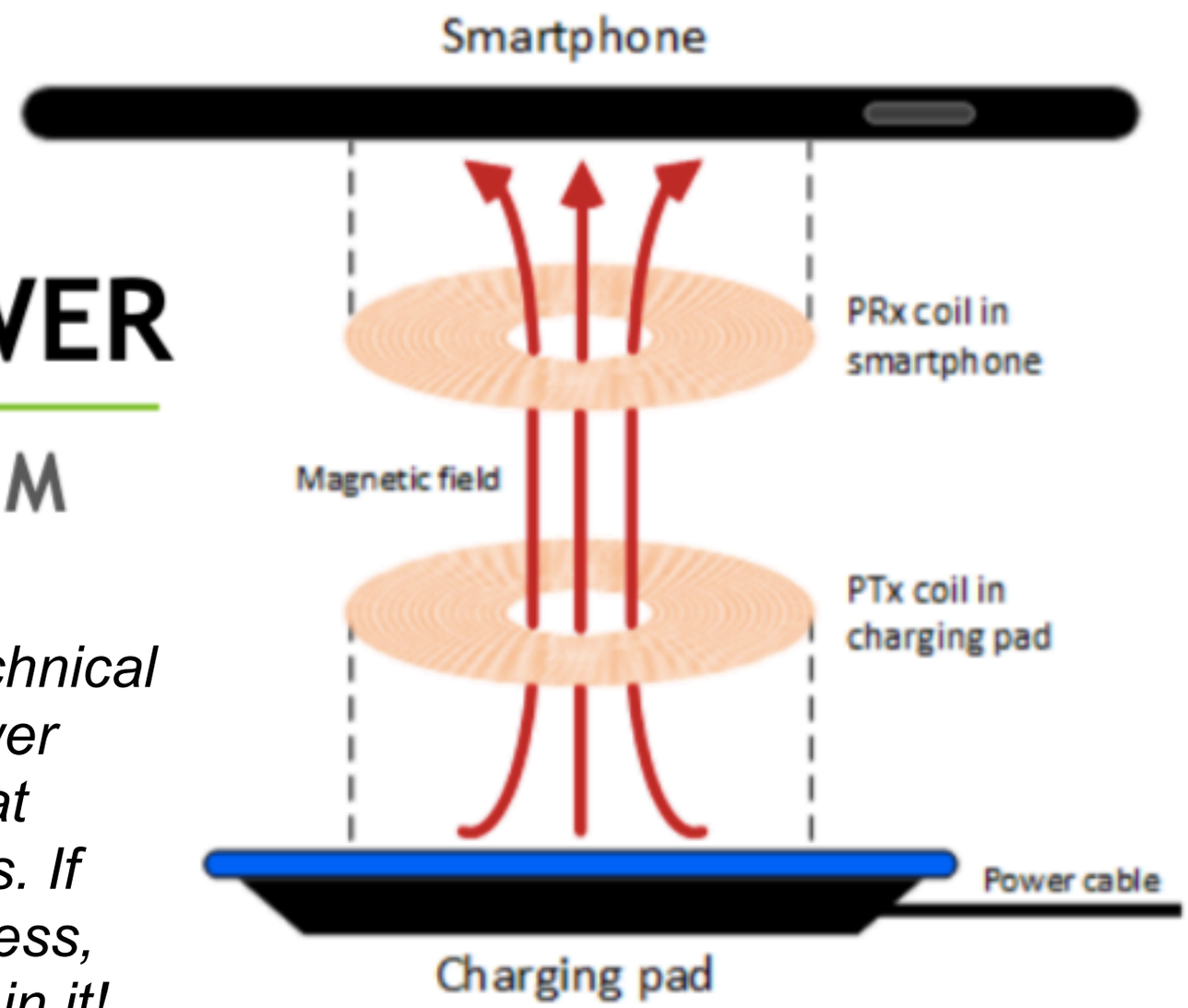

Images and data for this come from technical specifications from the qi Wireless Power Consortium, which is the main body that coordinates wireless charging protocols. If you have something that charges wireless, look at it. It probably has the qi symbol in it!

Qi Charging

Pad Loop Density

One style of charging pad coil is made of 20 loops of wire with a radius of 25 mm. The solenoid has a height of 10 mm.

What is the loop density for the coil in the charging pad?

$$n = \frac{N}{L} = \frac{20}{(0.01\text{m})}$$

$$= 2000 \text{ loops/meter}$$

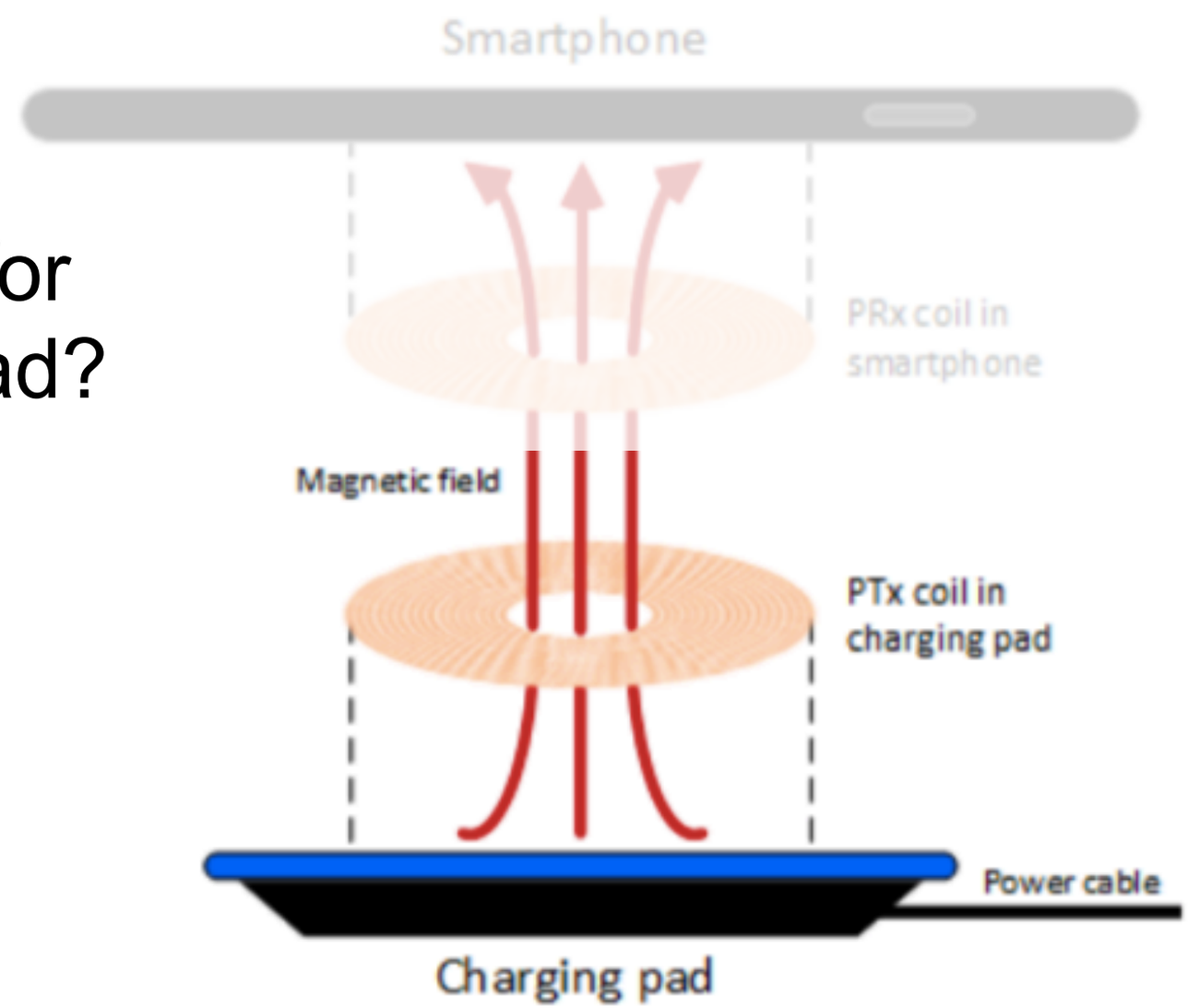

Qi Charging

Pad Magnetic Field

One style of charging pad coil is made of 20 loops of wire with a radius of 25 mm. The solenoid has a height of 10 mm.

What is the magnetic field made by the solenoid charging pad if its current is $I_{pad}(t) = 0.7A \sin[2 \pi 60 t]$?

$B = \mu_0 n I$

$B = (1.8\times10^{-3}T) \sin[2 \pi 60 t]$

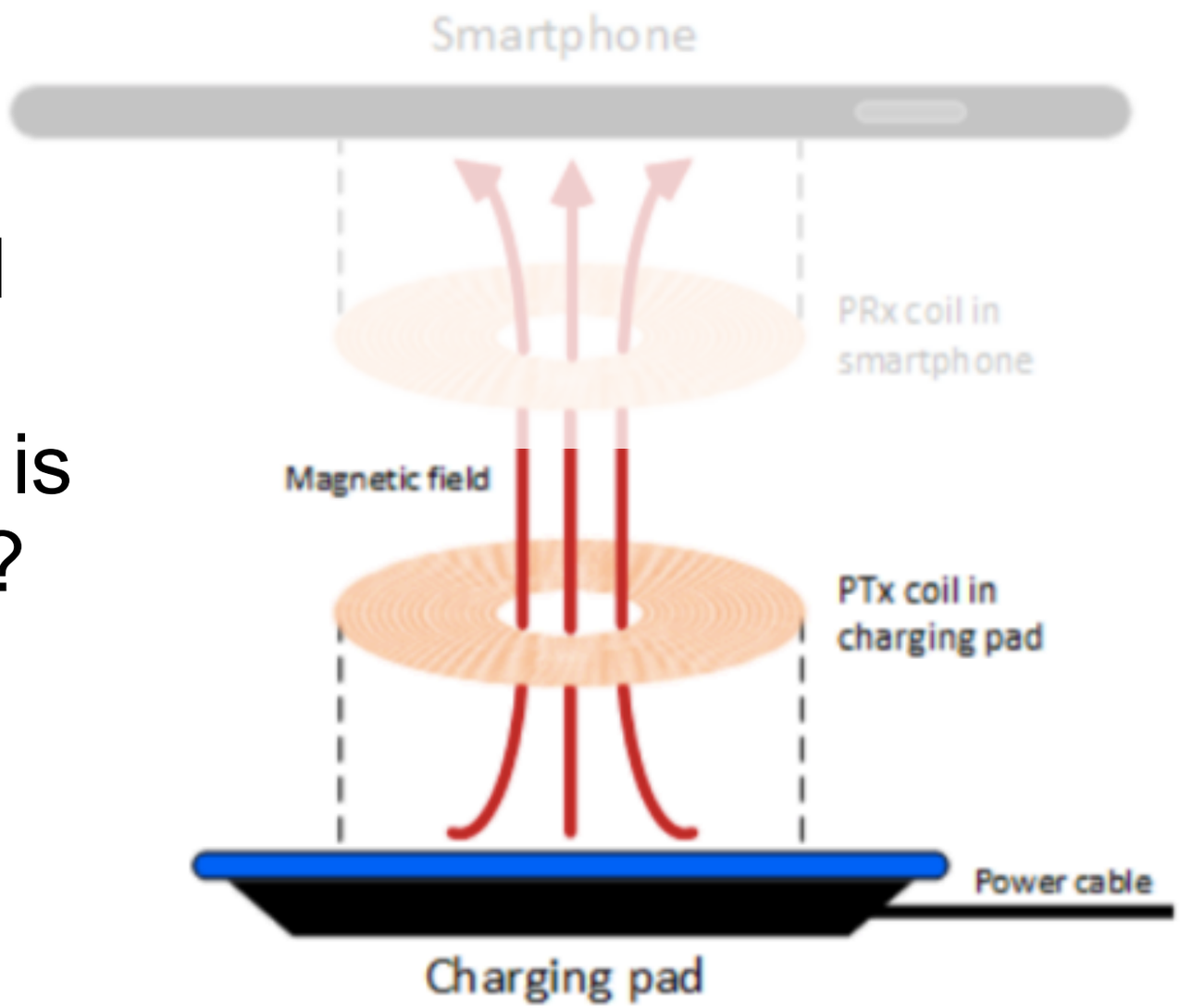

Qi Charging

Phone Flux

One type of cell phone coil is made of 14 loops of wire with a radius of 13 mm. The coil of wire in the phone has a height of 2.0 mm.

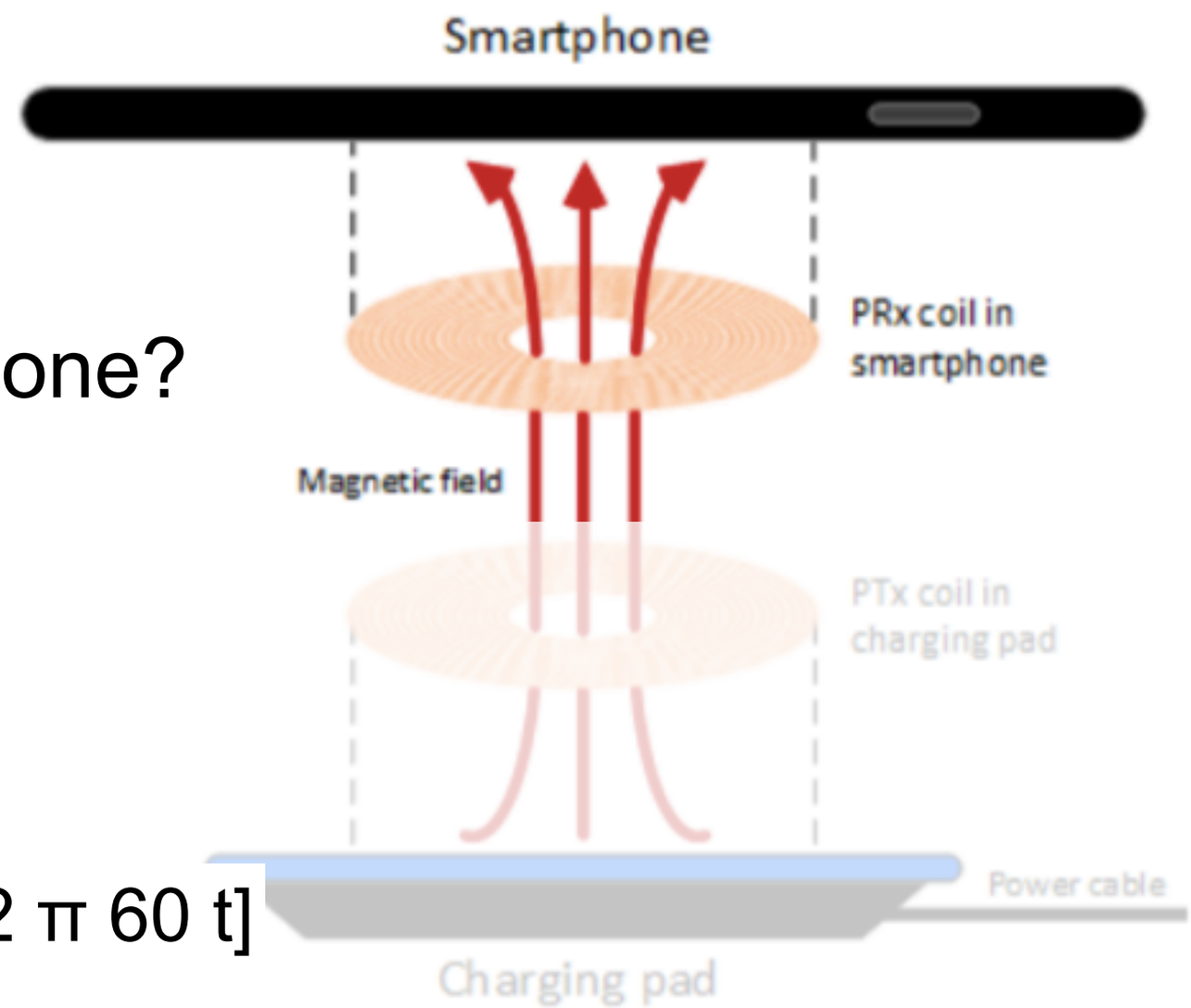

What is the magnetic flux through one coil in the phone?

$\Phi_B(t) = B(t)A$

$\Phi_B(t) = B(t)\,\pi\, r^2$

$\Phi_B(t) = B(t)\,\pi\,(0.013\text{m})^2$

$\Phi_B(t) = (9.6\times10^{-7}\ \text{Tm}^2)\sin[2\,\pi\,60\,t]$

Qi Charging

Phone Voltage

One type of cell phone coil is made of 14 loops of wire with a radius of 13 mm. The coil of wire in the phone has a height of 2.0 mm.

What is the voltage induced in the phone's coil?

$$\varepsilon = -N \frac{d\Phi_B}{dt}$$

$$\varepsilon = -(14)\,[-(9.6\times10^{-7})\,(2\,\pi\,60)\,\cos[2\,\pi\,60\,t]]$$

$$\varepsilon = (5\text{ mV})\cos[2\,\pi\,60\,t]$$

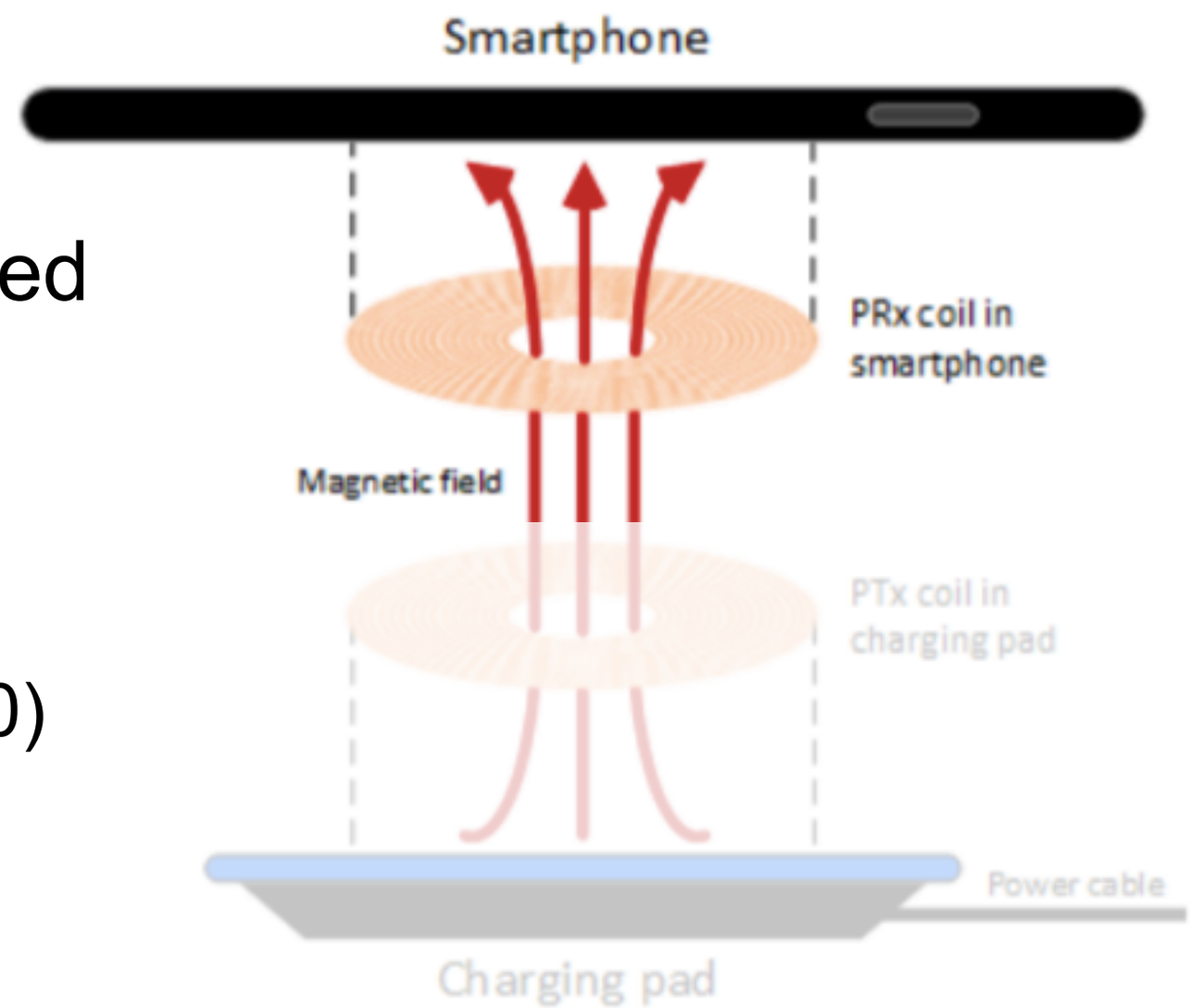

Pre-class Slides

Magnetic Flux

§ 13.1
Lecture 23

Youtube Playlist

Magnetic Flux

Amount of magnetic field passing **through** an area.

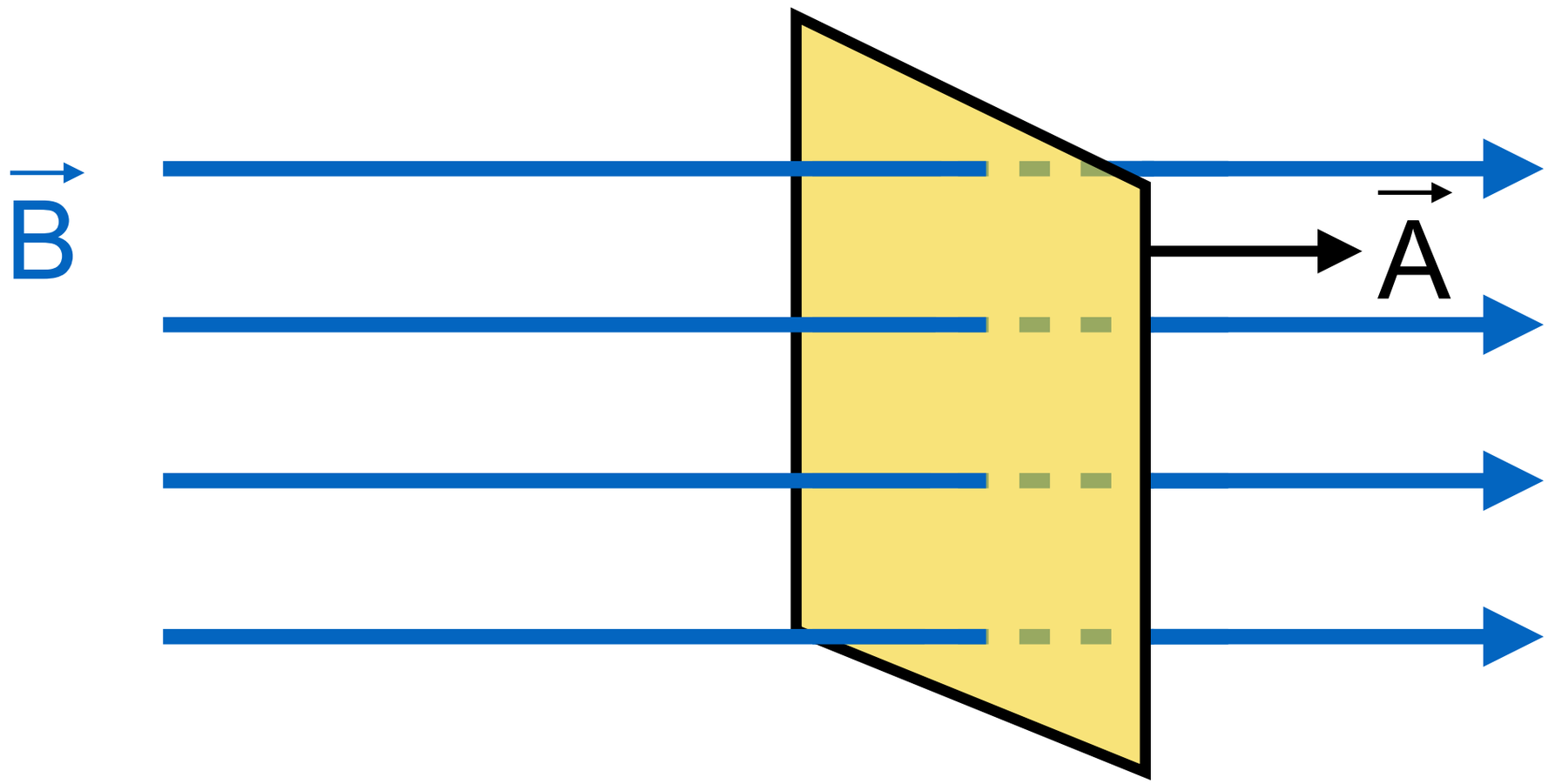

$$\Phi_B = \int \vec{B} \cdot d\vec{A} = \int B \, dA \cos\theta$$

Magnetic Flux Example

A magnetic field, $\vec{B}(t)$ passes through a square wire loop with side length L.

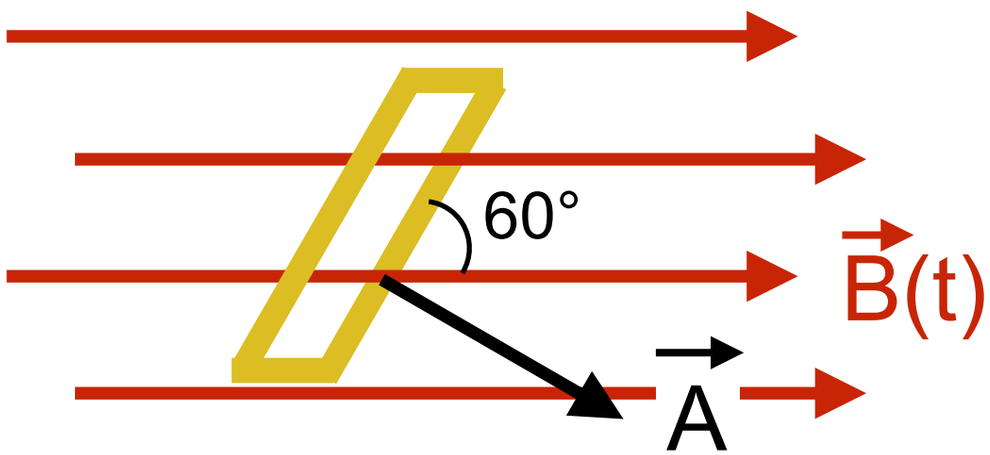

$$\vec{B}(t) = B_0\, e^{-t\,/\,t0}\, \hat{i}$$

What is the magnetic flux through the wire?

$$\Phi_B = \int B\, dA \cos\theta$$

$$= B\, A \cos\theta$$

$$= B_0\, e^{-t/t0}\, L^2 \cos\theta$$

$$= B_0\, L^2\, e^{-t/t0} \cos 30°$$

$$= \frac{\sqrt{3}}{2} B_0\, L^2\, e^{-t/t0}$$

What is θ?

1. 60°
2. 30°
3. 120°
4. 150°

Faraday's & Lenz's Law

§ 13.1-2
Lecture 23

EMF - Redux

"EMF" - **E**lectro**m**otive **F**orce

Historic name for a "force" that caused currents to flow.

Modern understanding : Currents flow because of a *potential difference*

"EMF" is just a voltage difference!

Faraday's Law

A changing magnetic flux though a **loop of wire** induces an EMF (voltage) around the loop.

$$\varepsilon = N \left| \frac{d\Phi_B}{dt} \right|$$

Induced EMF

Number of loops of wire

Rate of change of flux

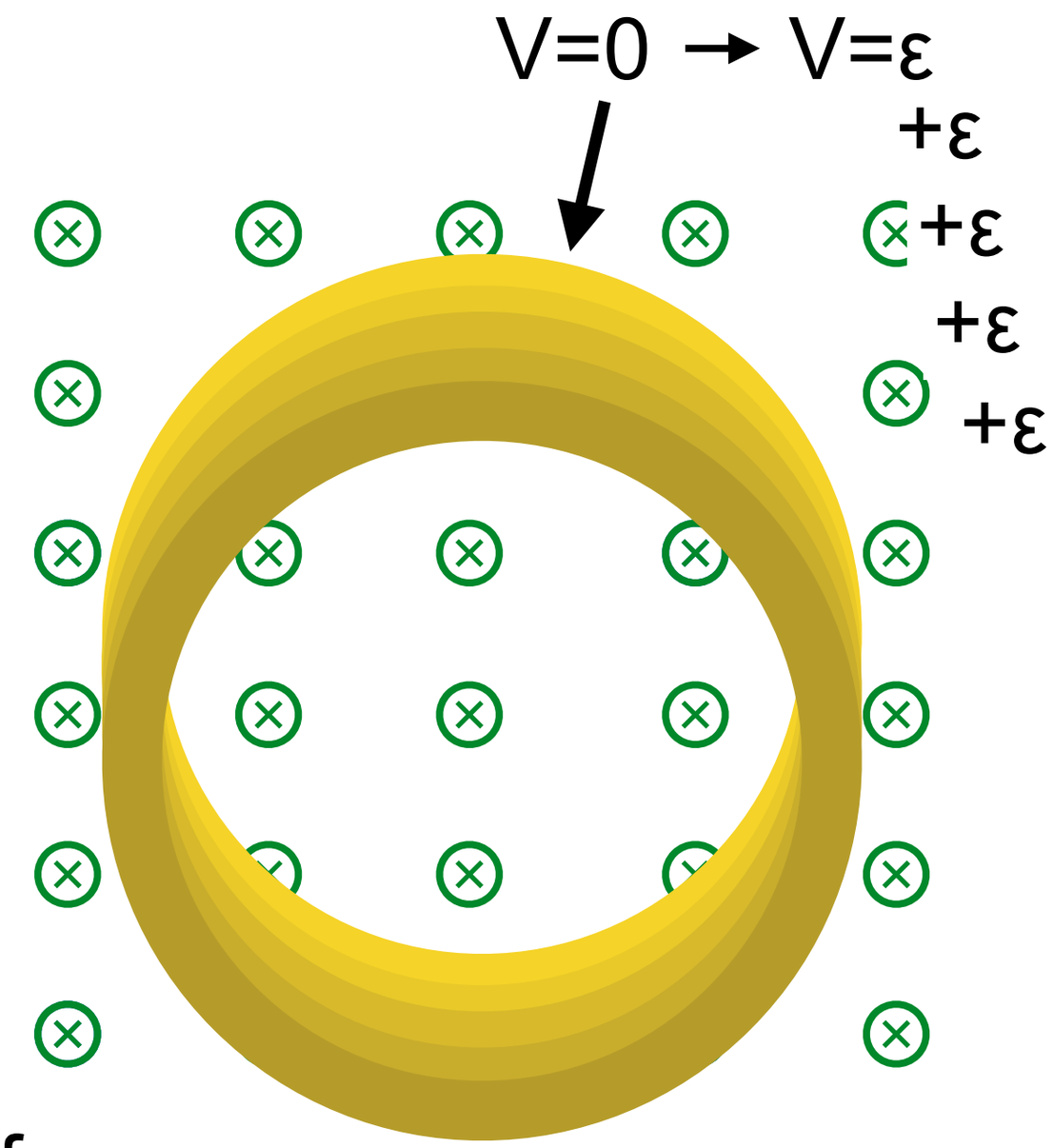

Note : flux is <u>not</u> for a closed surface

Faraday's Law Example

$$\Phi_B = \frac{\sqrt{3}}{2} B_0 L^2 e^{-t/t0}$$

A magnetic field, $\vec{B}(t)$ passes through a square wire loop with side length L.

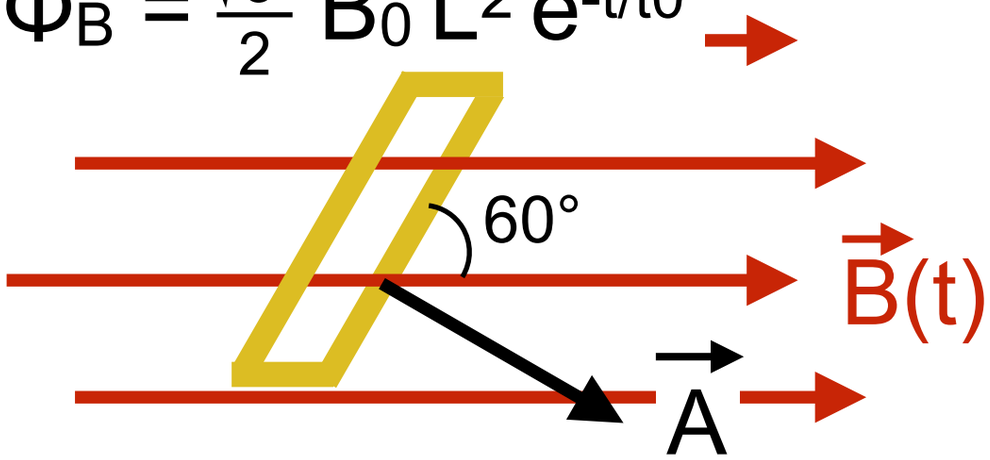

$$\vec{B}(t) = B_0 e^{-t / t0} \hat{i}$$

What is the EMF induced in the wire?

$$\varepsilon = N \left| \frac{d\Phi_B}{dt} \right|$$

$$= (1) \left| \frac{d\left[\frac{\sqrt{3}}{2} B_0 L^2 e^{-t/t0}\right]}{dt} \right|$$

$$= \frac{\sqrt{3}}{2} B_0 L^2 \left| \frac{d}{dt} e^{-t/t0} \right| = \frac{\sqrt{3} B_0 L^2}{2 t_0} e^{-t/t0}$$

What is the derivative?

1. $e^{-t/t0}$
2. $t_0 e^{-t/t0}$
3. $(1/t_0) e^{-t/t0}$
4. $(-1/t_0) e^{-t/t0}$
5. $\ln(-t/t_0)$

Induced Current

The EMF induces a current in the wire : $I_{induced} = \varepsilon / R$

Lenz's Law : The induced current in a coil creates its own magnetic field to *oppose* the changing flux.

Updates Faraday's Law:

$$\varepsilon = -N \frac{d\Phi_B}{dt}$$

Lenz's Law

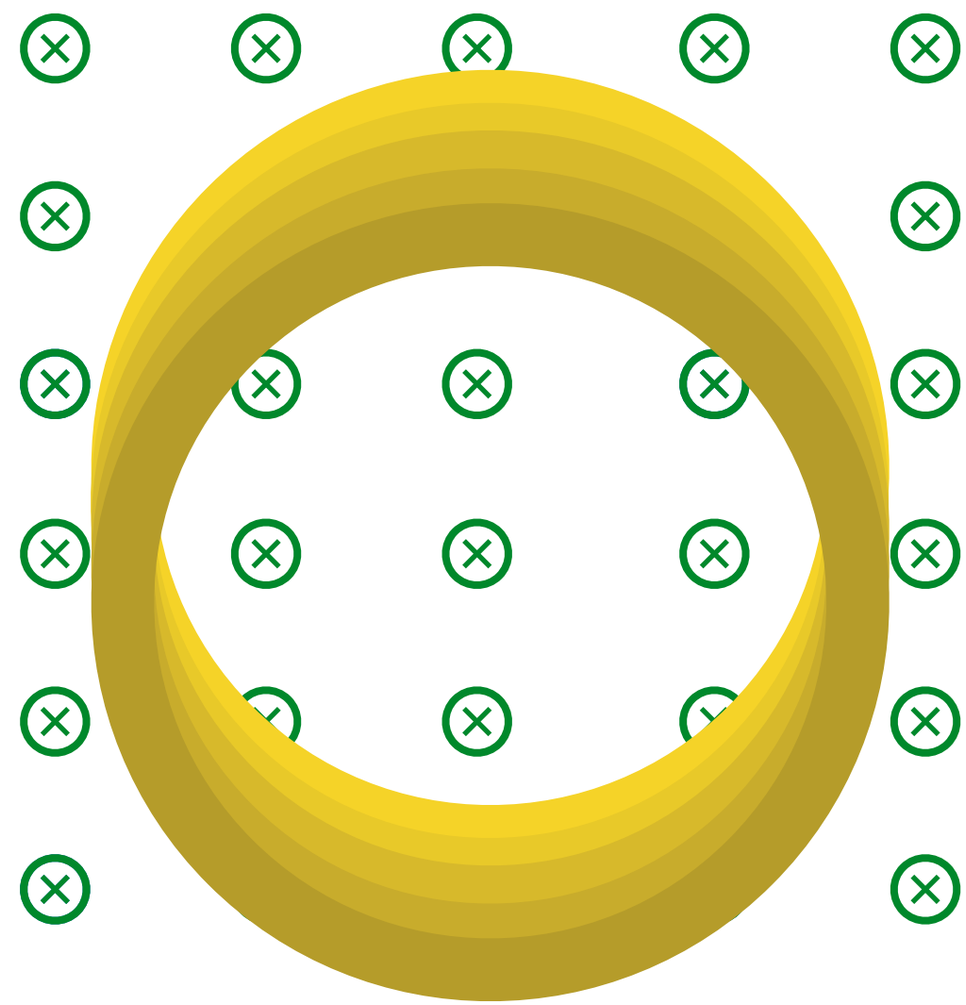

Opposing Changing Flux

The induced current in a coil creates its own magnetic field to *oppose* the changing flux.

Flux gets weaker : current *induces* a B in same direction as flux (replaces missing flux)

Flux gets stronger : current induces a B in opposite direction as flux (cancels new flux)

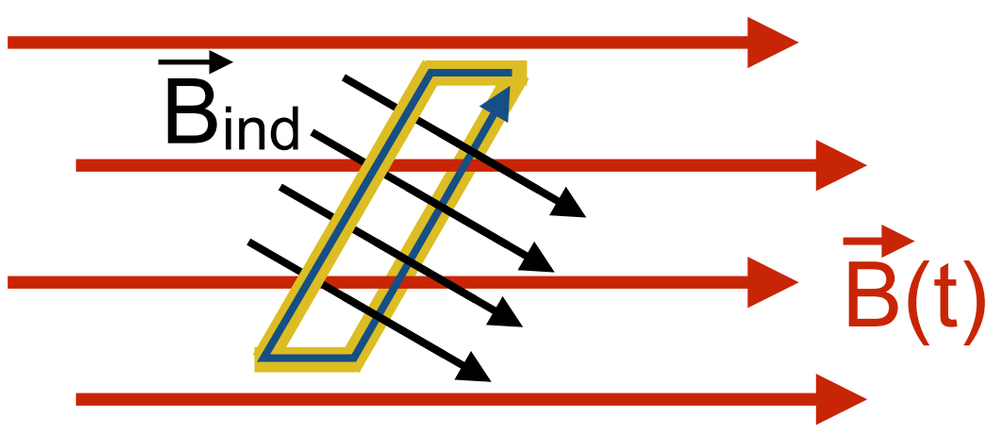

$$\vec{B}(t) = B_0\, e^{-t\,/\,t0}\, \hat{i}$$

Induced B has component in same direction as original B

Lenz's Law Example

The **magnetic field** out of the screen gets stronger.

The **flux** through the loop gets **larger**.
larger / smaller

An **induced magnetic field opposes** the changing flux. It must be **into** the screen.
into / out of

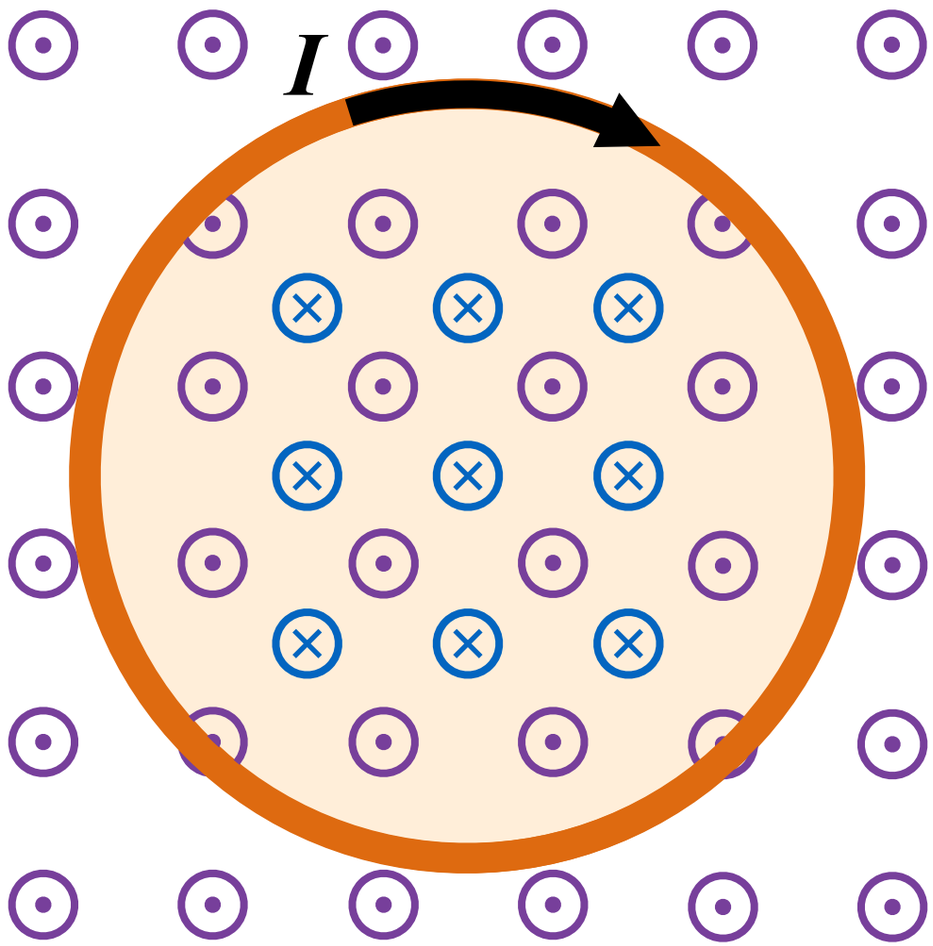

To make the induced magnetic field, a **current** is induced in the wire. It is **clockwise** around the loop.
CW / CCW

Using Faraday's and Lenz's Law

Ignore signs in Faraday's law: $\varepsilon = N \left| \frac{d\Phi_B}{dt} \right|$

Gives size of voltage difference

Ohm's Law gives size of current

Determine direction of current flow with Lenz's Law (induced B opposes changing flux).