August 10, 2023

Reflection 7 : Due tonight by midnight

Conceptual HW 7 : Due Sunday by midnight

Lab : Tuesday

Written HW 7 : Due Tuesday by midnight

Conceptual HW 8 : Due Wednesday by midnight

Quizzes 5-8 : Thursday!

Location : Owen Hall 101

Written HW 8 : Due Thursday by midnight

Make Up Labs : Next Friday, Noon-2pm & 2-4pm

Office Hours

Mondays	Noon-2pm
Thursdays	2-3pm

	Monday	Tuesday	Wednesday	Thursday	Friday
Week 7	**Aug 7** V2 CH 12	**Aug 8** Homework 6 Lab W7 - DC Circuits	**Aug 9** V2 CH 13	**Aug 10** V2 CH 13 Studio : Magnetism	**Aug 11** V2 CH 14 Reflection
Week 8	**Aug 14** V2 CH 16	**Aug 15** Homework 7 Lab W8 - EM Induction	**Aug 16** V2 CH 16	**Aug 17** Homework 8 Quiz 5&6: CH 12-16 Quiz 7&8: Cumulative	**Aug 18** No Class Make up Lab Noon-2pm Make Up Lab 2-4pm

Chapter 14

Inductors

Inductors

§ 14.2
Lecture 25

Inductor - Voltage Drop

Voltages are induced to <u>oppose</u> change in current.

Increasing Current

Voltage to oppose current

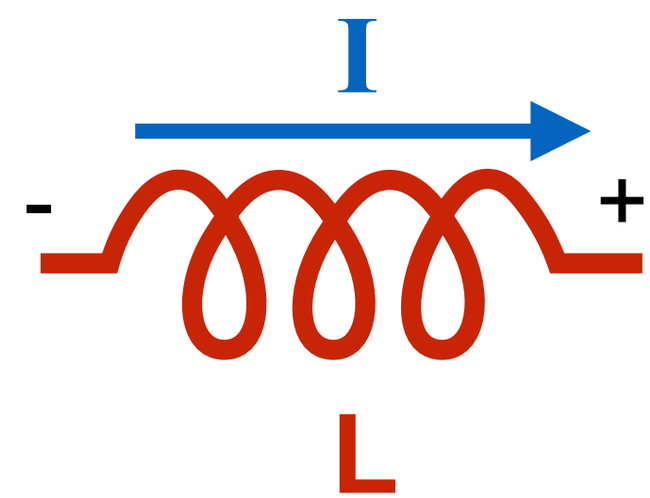

Decreasing Current

Voltage to replace current

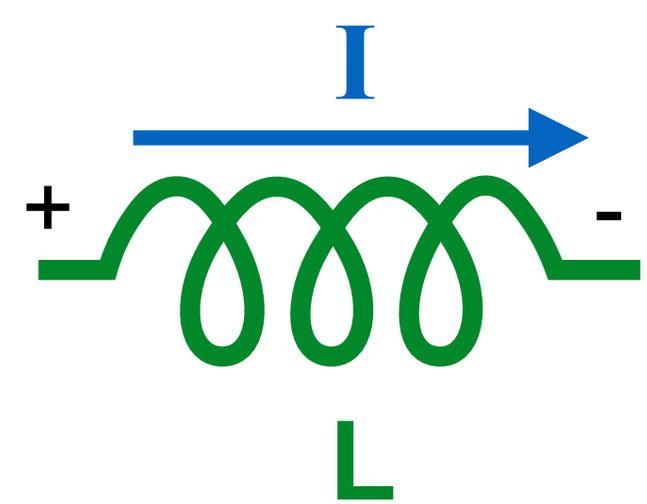

LC Circuits

A capacitor with initial charge Q_0 its connected to an inductor.

Find the equation for the *current* as a function of time.

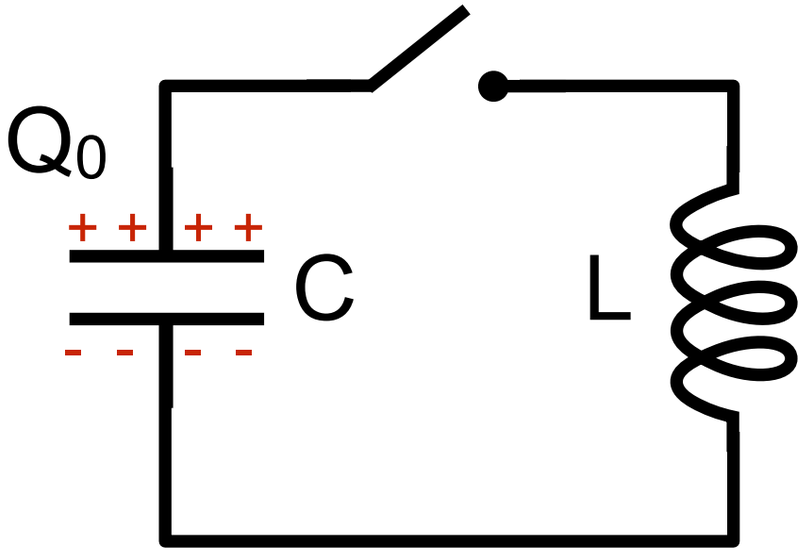

LC Circuits

Labeling Voltage

When the switch closes, does current increase or decrease in the inductor?

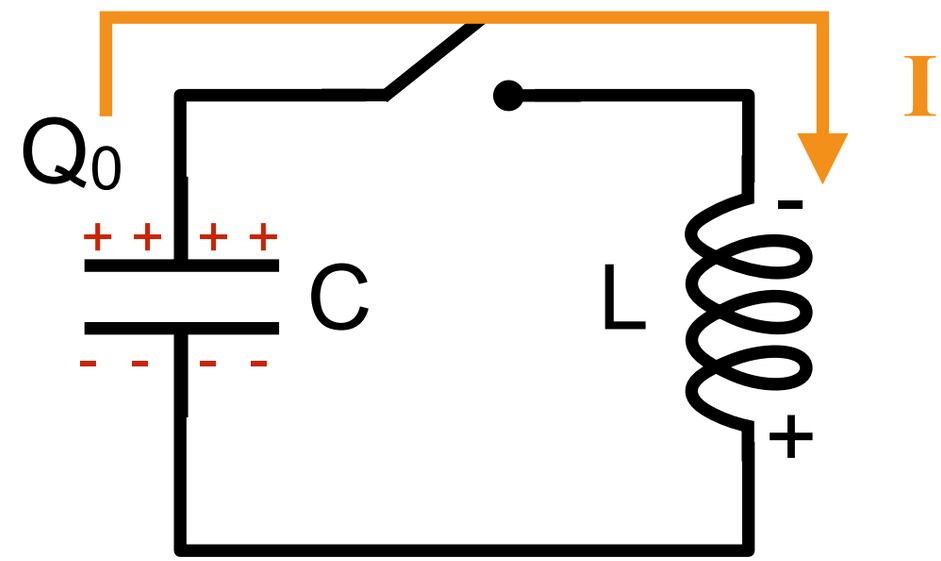

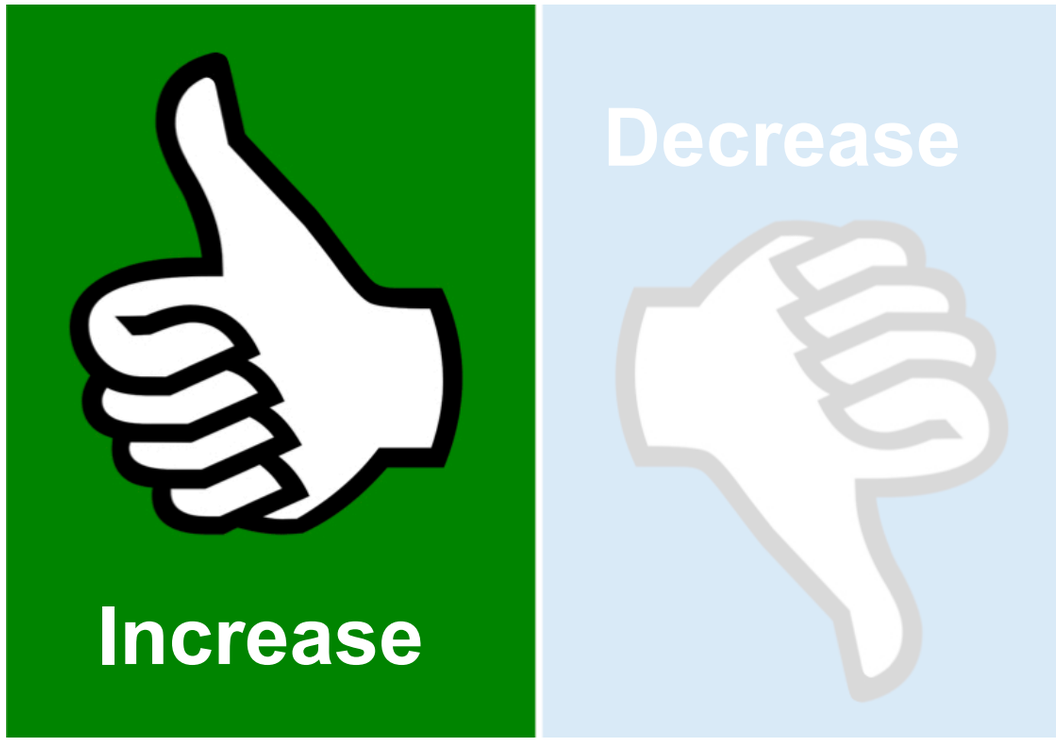

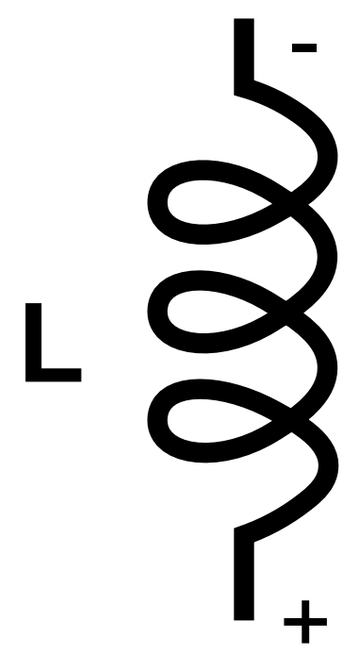

0. Don’t wait on my response

LC Circuits

Loop Rule

Which equation correctly applies the Loop Rule around our circuit (in the direction the current goes)?

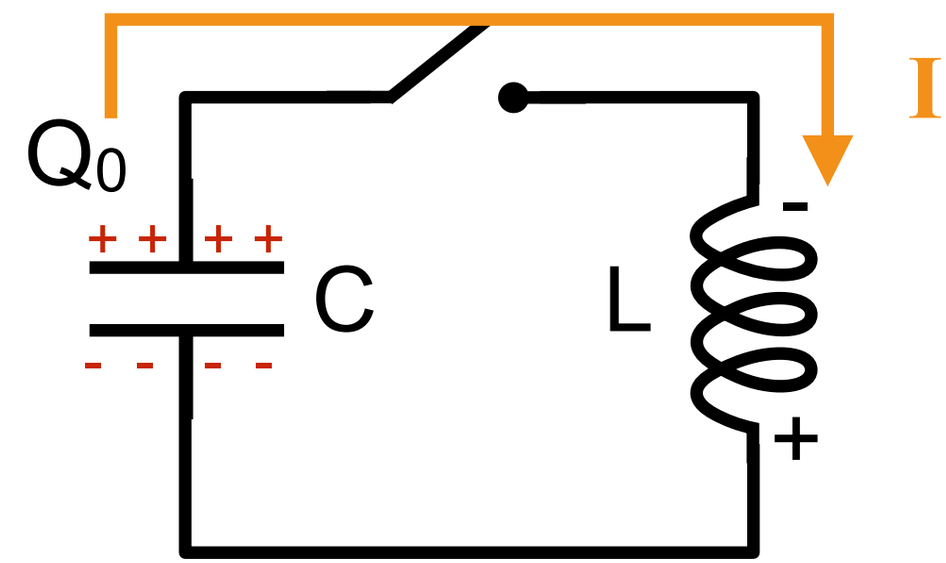

1. $\Delta V_C - \Delta V_L = 0$
2. $\Delta V_C + \Delta V_L = 0$
3. $-\Delta V_C - \Delta V_L = 0$
4. $-\Delta V_C + \Delta V_L = 0$
0. Don't wait on my response

LC Circuits

Calculation

$$\Delta V_C + \Delta V_L = 0$$

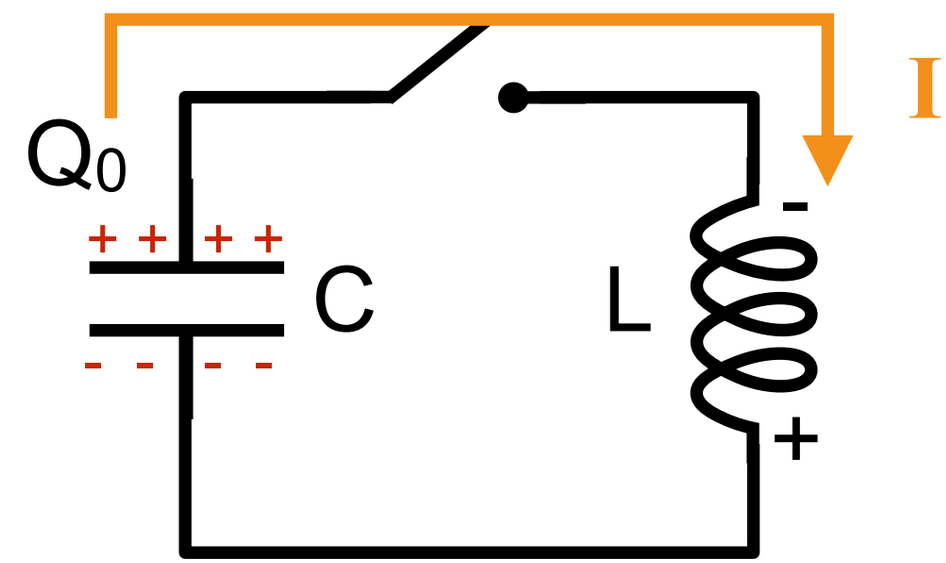

$$\frac{Q}{C} - L\frac{dI}{dt} = 0$$

$$\frac{Q}{C} = L\frac{dI}{dt}$$

For a discharging capacitor, $I = -\dfrac{dQ}{dt}$

$$\frac{Q}{C} = -L\frac{d^2Q}{dt^2} \longrightarrow \frac{d^2Q}{dt^2} = -\frac{1}{LC}Q$$

Math Check!

Which function, when you find the 2nd derivative results in the negative of itself?

$$\frac{d^2x}{dt^2} = -x$$

1. $x(t) = \sin(t)$
2. $x(t) = e^{-t}$
3. $x(t) = 1 / t$
4. $x(t) = \cos(t)$
5. $x(t) = \ln(t)$
0. Don't wait on my response

$$x(t) = \sin(\omega t)$$

$$\frac{dx}{dt} = \omega \cos(\omega t)$$

$$\frac{d^2x}{dt^2} = -\omega^2 \sin(\omega t)$$

$$\frac{d^2x}{dt^2} = -\omega^2 x$$

LC Circuits

Solve!

$$\frac{d^2Q}{dt^2} = -\frac{1}{LC}Q \qquad \frac{d^2x}{dt^2} = -\omega^2 x$$

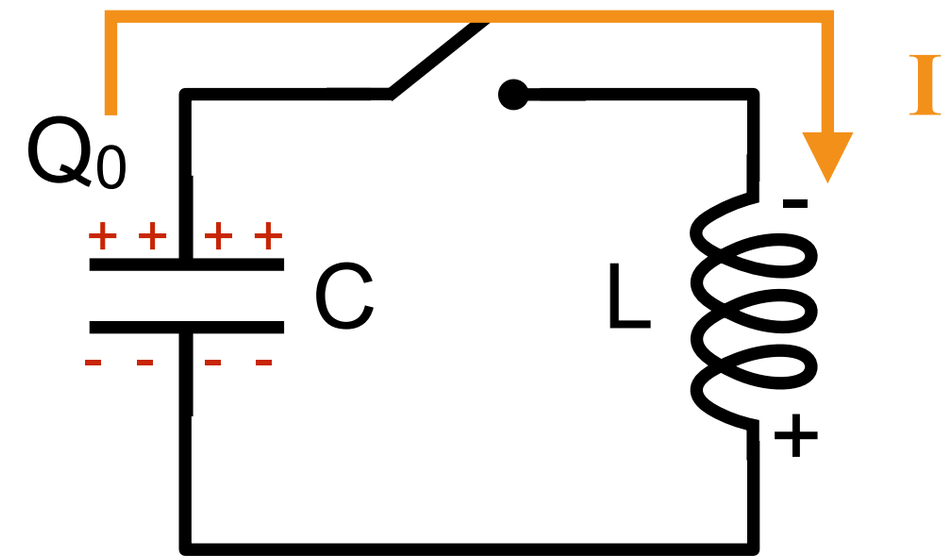

$$x(t) = Q(t)$$

$$\omega^2 = \frac{1}{LC} \longrightarrow \omega = \frac{1}{\sqrt{LC}}$$

$$Q(t) = Q_0 \sin(\omega t) \qquad \text{or} \qquad Q(t) = Q_0 \cos(\omega t)$$

LC Circuits

Solutions

$$Q(t) = Q_0 \sin(\omega t)$$

$$Q(t) = Q_0 \cos(\omega t)$$

$$\omega = \frac{1}{\sqrt{LC}}$$

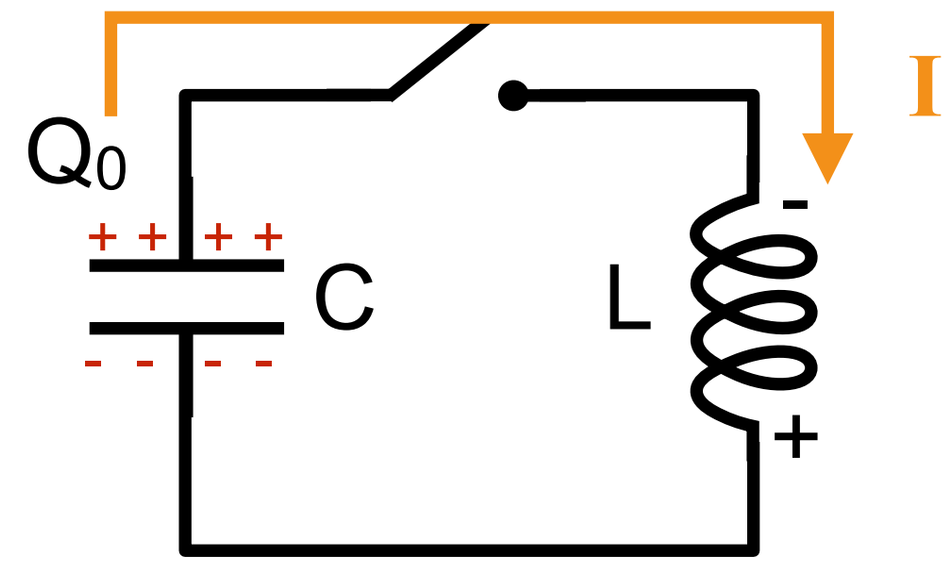

Which solution makes more sense for our situation?

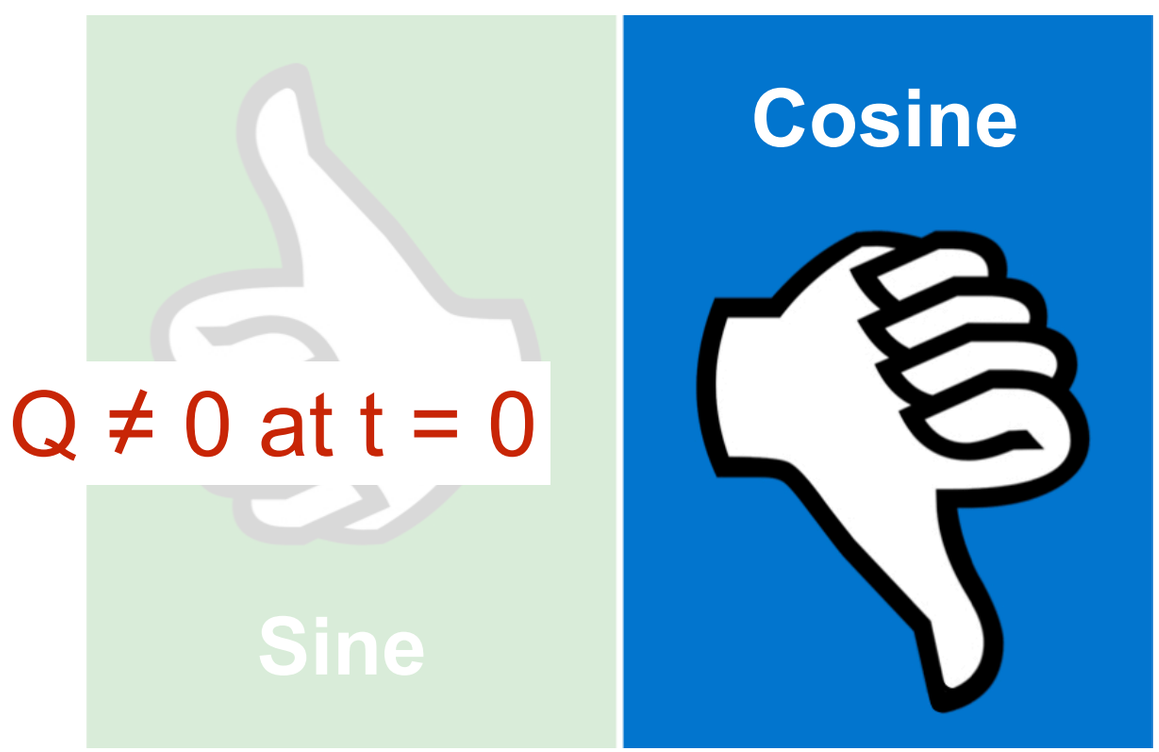

$$Q(t) = Q_0 \cos(\omega t)$$

$$I(t) = -\frac{dQ}{dt}$$

$$= Q_0\, \omega \sin(\omega t)$$

0. Don't wait on my response

LC Circuits

Graph

$Q(t) = Q_0 \cos(\omega t)$

$I = Q_0 \omega \sin(\omega t)$

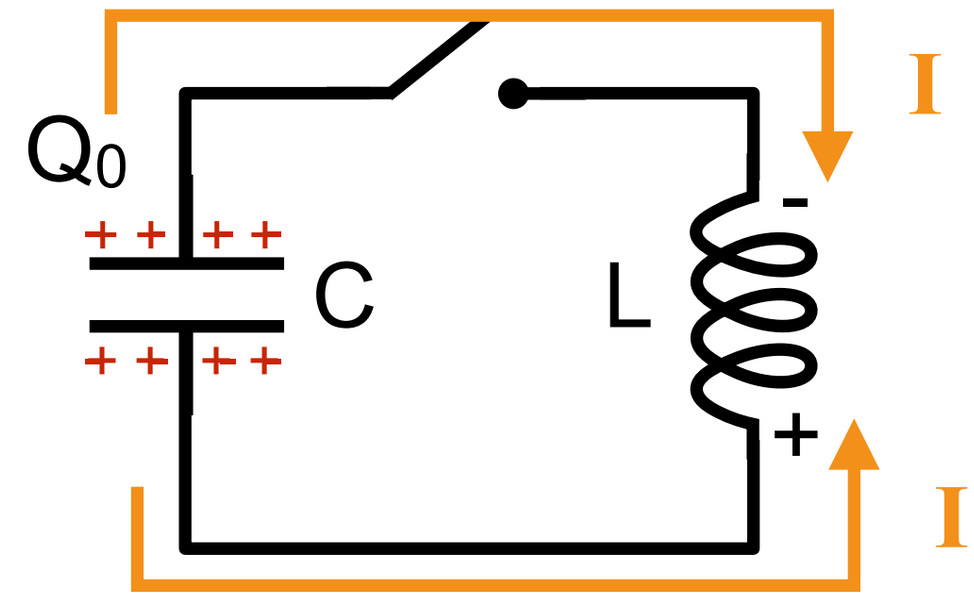

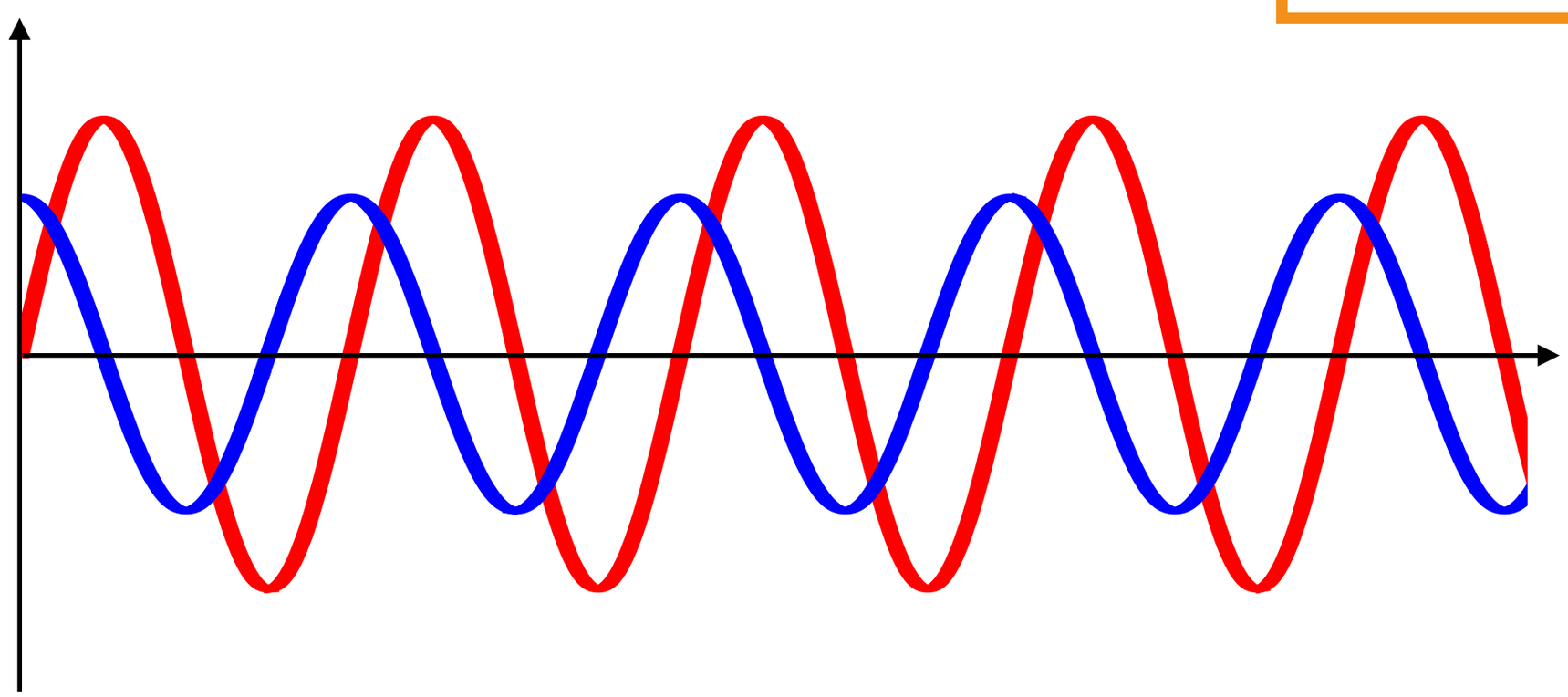

LR Circuits

A constant current flows through this circuit.

At time t=0, the switch flips.

The current begins to decrease.

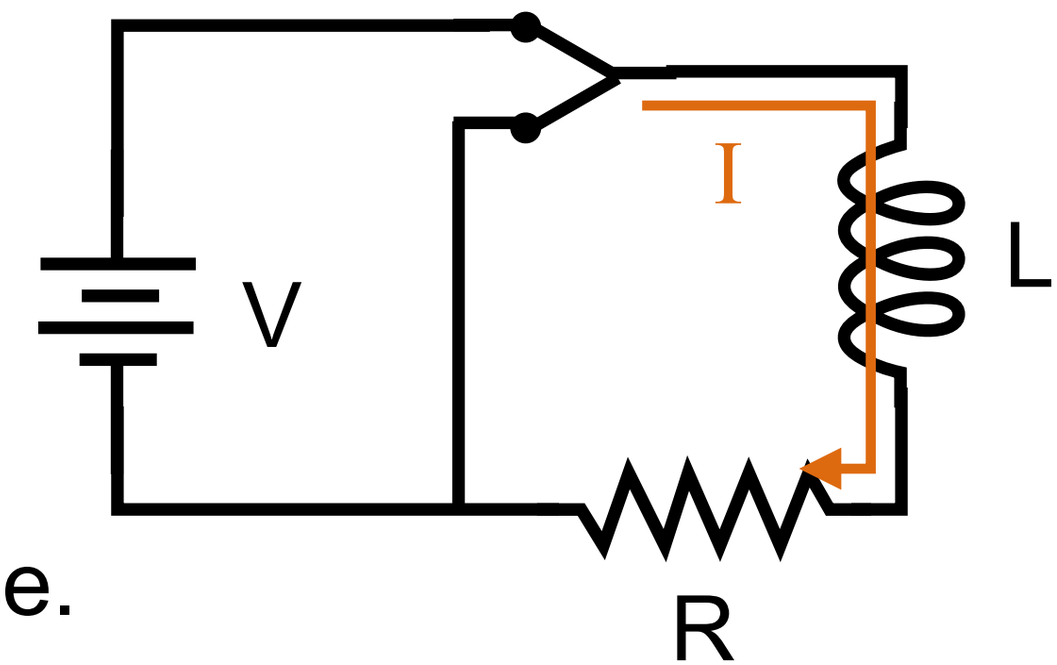

$$\Delta V_R = \Delta V_L$$

$$I R = - L \frac{dI}{dt}$$

$$- \frac{dt}{(L/R)} = \frac{dI}{I}$$

LR Circuits

Solution

At time t=0, the current is I_0.

Integrate our equation to find the current at time t : I(t).

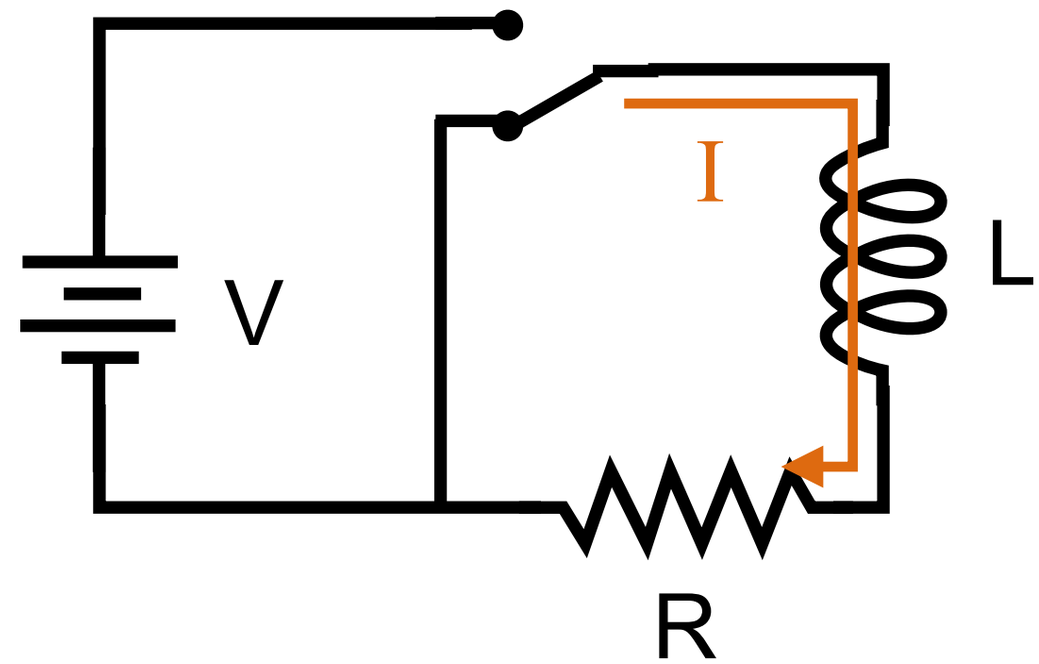

$$\int_0^t -\frac{dt}{(L/R)} = \int_{I_0}^{I(t)} \frac{dI}{I}$$

$$-\frac{t}{(L/R)} = \ln(I)\Big|_{I_0}^{I(t)}$$

$$-\frac{t}{(L/R)} = \ln[I(t)] - \ln[I_0]$$

$$-\frac{t}{(L/R)} = \ln\frac{I(t)}{I_0}$$

$$e^{-t/\tau} = \frac{I(t)}{I_0}$$

$$I(t) = I_0\, e^{-t/\tau}$$

$$\tau = \frac{L}{R}$$

LR Circuits

Graph

$$I(t) = I_0 e^{-t/\tau} \qquad \tau = \frac{L}{R}$$

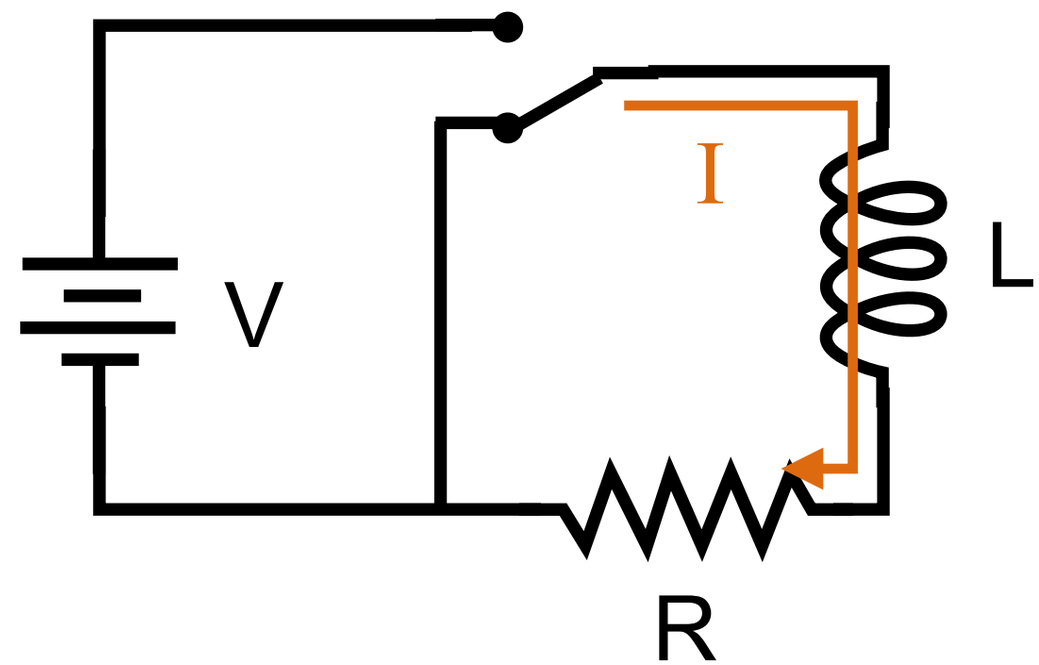

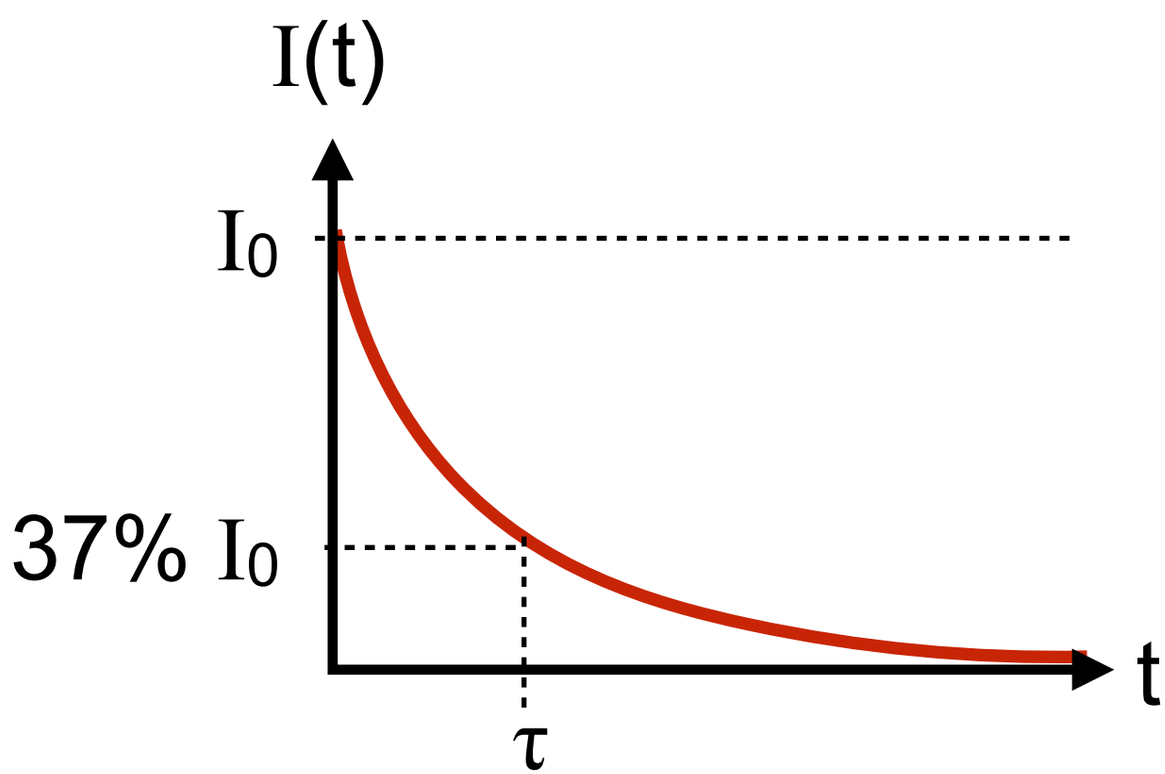

<u>At time τ</u>

$$I(\tau) = I_0 e^{-\tau/\tau}$$

$$I(\tau) = I_0 e^{-1}$$

$$I(\tau) = I_0 (0.37)$$

LRC Circuits

Energy moves between L and C just like in LC circuits.

Resistor still dissipates the energy as current flows through it.

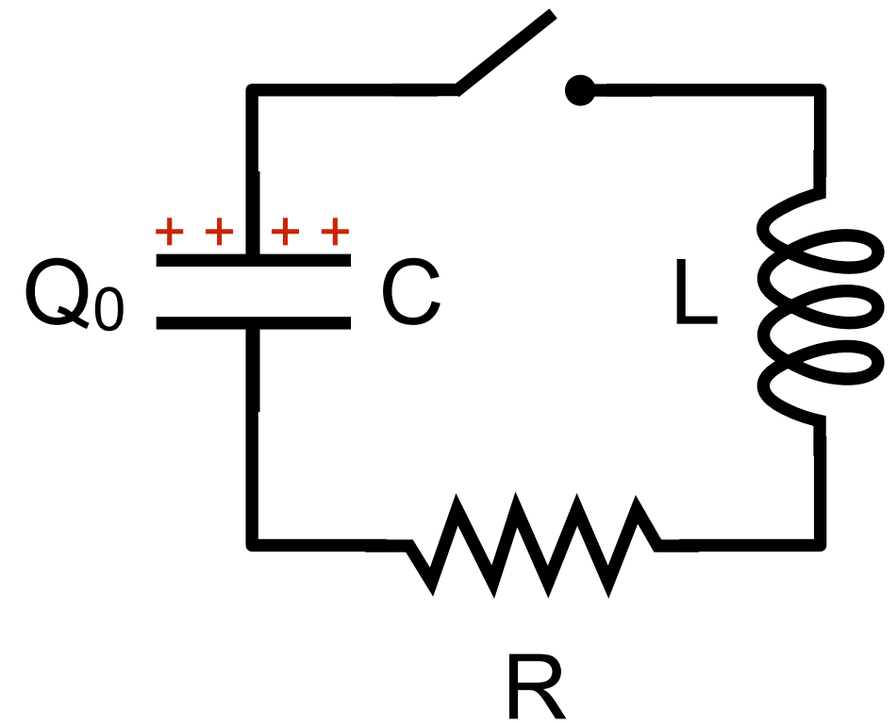

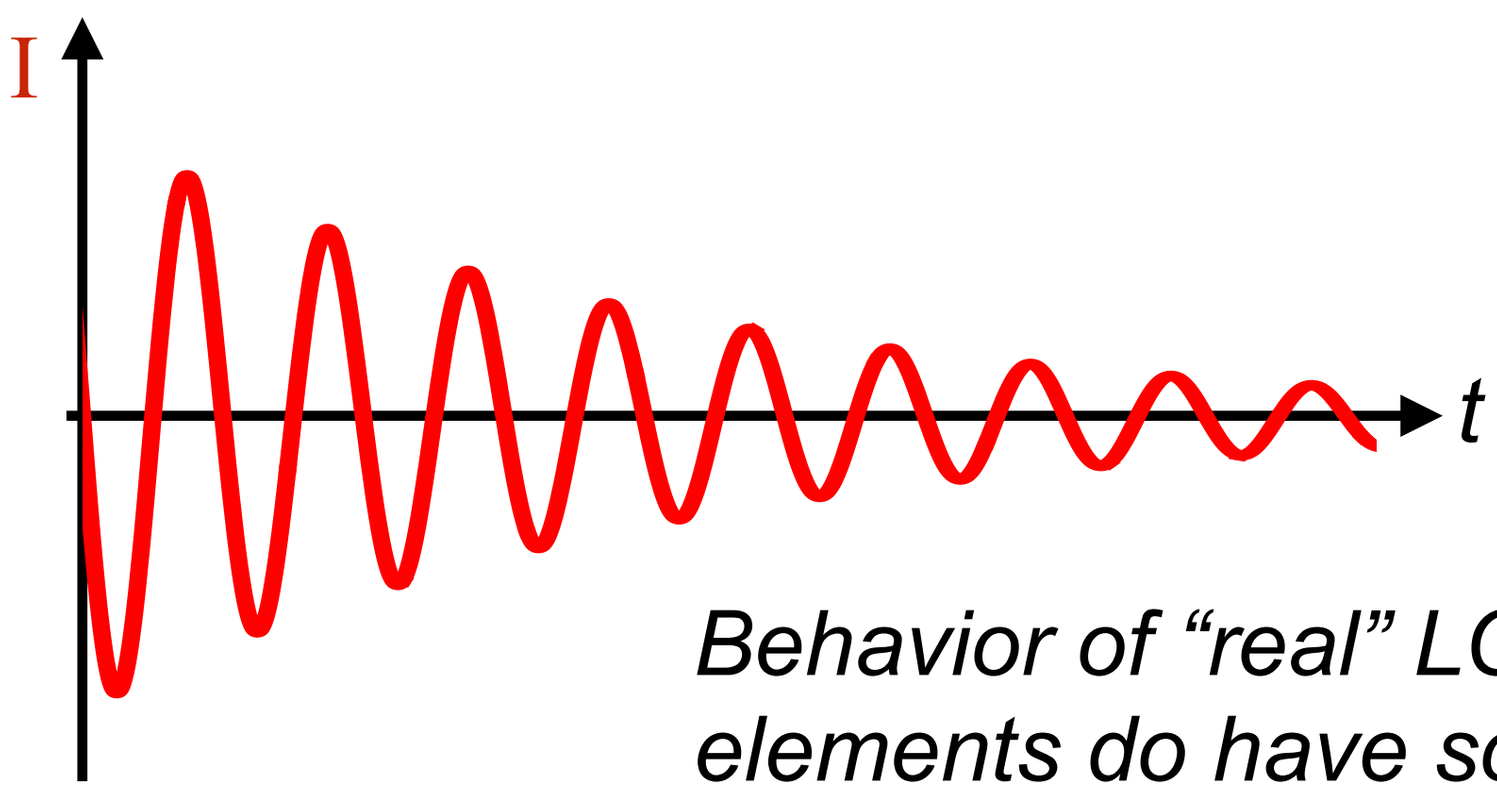

Behavior of "real" LC circuits since the elements do have some resistance.

Energy Stored In An Inductor

$P_{electric} = I\,V$

$P_{electric} = I\,(-\,L\,dI/dt)$

Electric energy lost
Stored by the inductor

$dU\,/\,dt = I\,(+\,L\,dI/dt)$

$dU = L\,I\,dI$

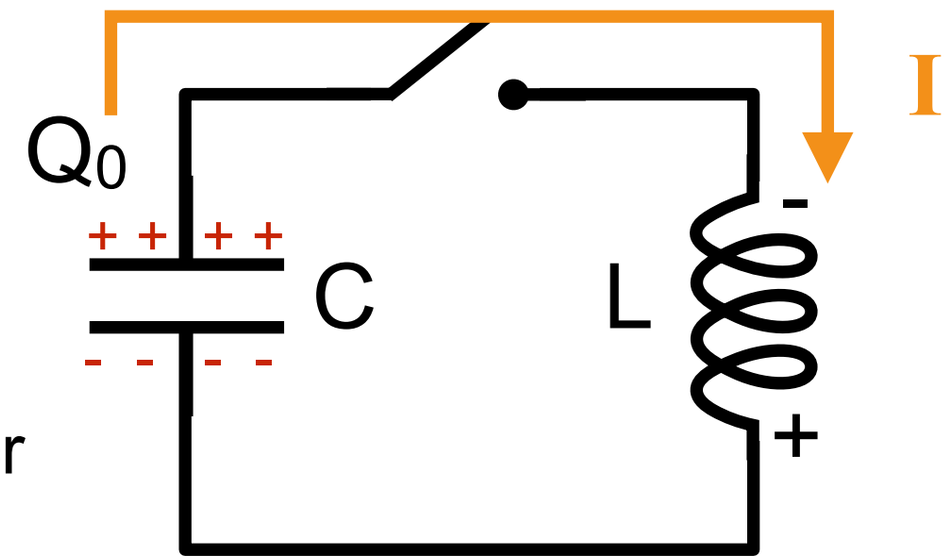

Initially, no energy stored and no current

Current builds to I and energy stored is U

$$\int_0^U dU = L\int_0^I I\,dI \qquad U = \frac{1}{2}\,L\,I^2$$

Where is that energy?

Pre-class Slides

Inductors

§ 14.2
Lecture 25

Youtube Playlist

Content Review

Solenoids

$B = \mu_0 n I$

When viewed from the end, the current in this solenoid is counter-clockwise around the coil. In what direction is the magnetic field inside the solenoid?

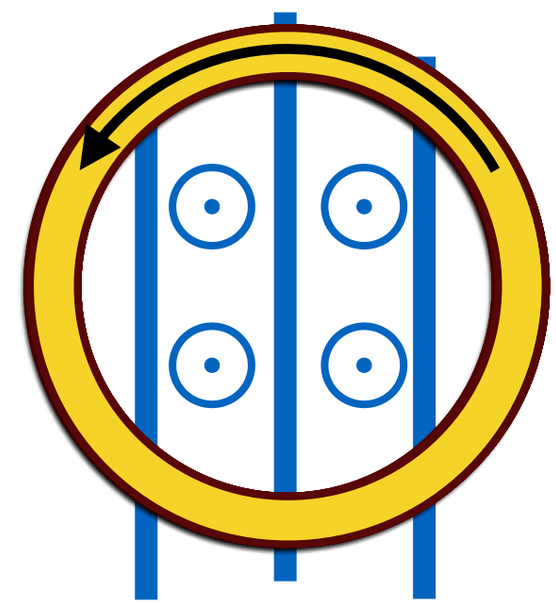

1. Clockwise
2. Counter clockwise
3. Into the screen
4. Out of the screen
0. Don’t wait on my response

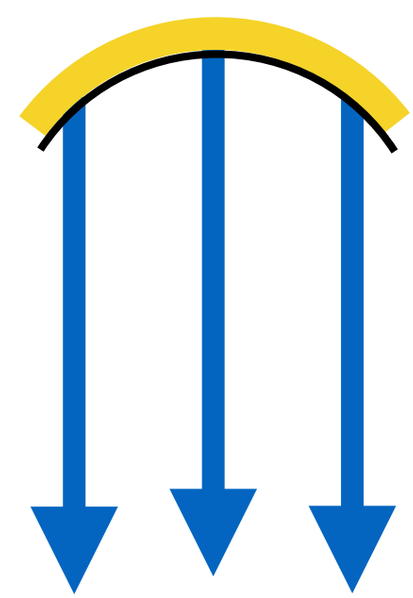

Induced EMF

Solenoids

$B = \mu_0 n I$

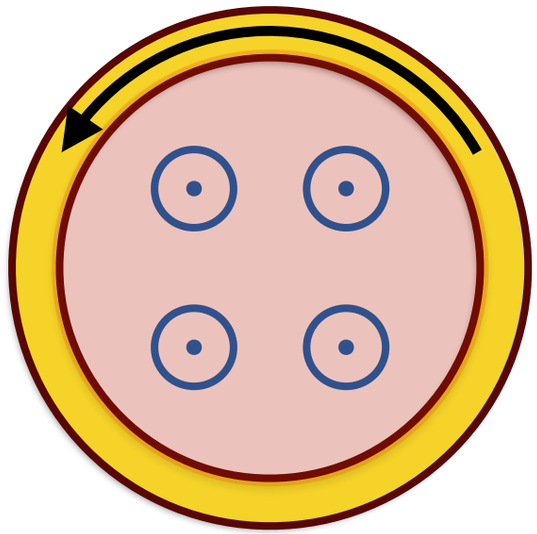

If the magnetic field changes, there is an induced EMF around the solenoid loops.

$$\Phi_B = \int \vec{B} \cdot d\vec{A}$$

$$\Phi_B = \int B \, dA$$

$$\Phi_B = B \int dA$$

$$\Phi_B = (\mu_0 n I) A$$

$$\varepsilon = -N \frac{d\Phi_B}{dt}$$

$$\varepsilon = -N \frac{d}{dt} (\mu_0 n I A)$$

$$\varepsilon = -(\mu_0 n N A) \frac{dI}{dt}$$

Induced Current

Solenoids

$$\varepsilon = -\boxed{(\mu_0\, n\, N\, A)}\,\frac{dI}{dt}$$

$B = \mu_0\, n\, I$

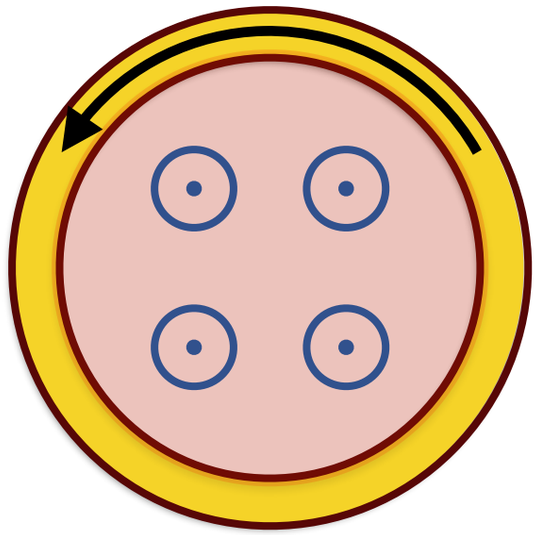

Ohm's Law:

$$I_{ind} = -\frac{(\mu_0\, n\, N\, A)}{R}\,\frac{dI}{dt}$$

Original current

Induced current

Total current in loops : $I_{tot} = I + I_{ind}$

$\frac{dI}{dt} > 0$ $\quad > 0$

$\frac{dI}{dt} < 0$ $\quad < 0$

Inductors

Voltages are induced to <u>oppose</u> change in current.

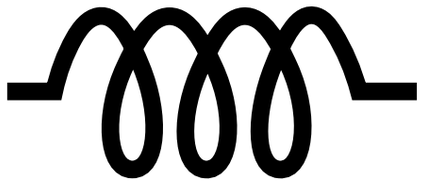

$$\Delta V_L = - L \frac{dI}{dt}$$

Opposes change

Inductance

Change in current

<u>For a solenoid</u>

$$L = \mu_0 \, n \, N \, A$$

Property of the inductor

Depends just on geometry of the inductor

Units : Henry, H

Slinky Inductor

What is the inductance of my slinky when compressed?

85 Loops
Length : 5.3cm
Radius : 3.2cm

<u>For a solenoid</u> $L = \mu_0 \, n \, N \, A$

$$L = (4\pi\times10^{-7})\ (85/0.053)\ (85)\ (\pi\ 0.032^2)$$

$$L = 0.00055\ \text{H} = 550\ \mu\text{H}$$

Slinky Inductor

Stretching

If I stretch a slinky out, how does its inductance change?

1. Increases
2. Decreases
3. Does not change
0. Don't wait on my response

<u>For a solenoid</u>

$$L = \mu_0 \, n \, N \, A$$

N / length

Inductors

Voltage Check

A 550μH inductor has a constant current of 2A moving through it. What is the voltage drop across the inductor?

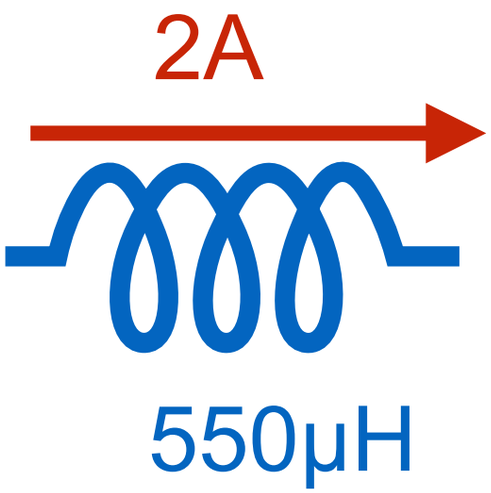

1. 1100 V
2. 275 V
3. 0.0011 V
4. 0.000275 V
5. 0 V
0. Don't wait on my response

$$\Delta V_L = -L \cancel{\frac{dI}{dt}}$$

No flux change,
no induced voltage

Current flows through it as if it were just a wire.