PM2812 GPIB Controller

Designed by Noah Husby <opensource@husbylabs.com>

This module acts as a GPIB/HP-IB (General Purpose Interface Bus) controller that reads and sends commands to a PM2812 power supply.The USB-C port on the board allows serial communication with a computer to monitor the power supply. Additionally, an RS485 interface is exposed for a desk-mounted control panel which will display power supply status and allow for control.

This project is licensed under the MIT License
View license: https://opensource.org/license/mit

Overview

File: overview.kicad_sch

Title:		Husby Labs /OPENSOURCE
Project: **PM 2812 GPIB Controller**		
Sheet: /		
File: gpib_controller.kicad_sch		Author: Noah Husby
Size: A3	Rev: 1	Date: 2026-03-12
KiCad E.D.A. 9.0.8		Id: 1/4

Husby Labs
Chicago, IL
United States
opensource@husbylabs.com

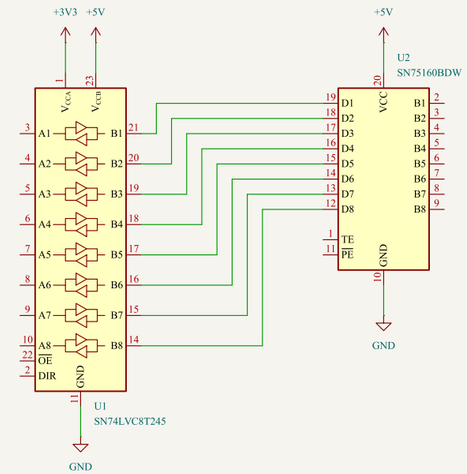

Microcontroller

File: microcontroller.kicad_sch

RS485 Transciever

File: transciever.kicad_sch

Title: **Overview**		Husby Labs /OPENSOURCE
Project: **PM 2812 GPIB Controller**		
Sheet: /Overview/		
File: overview.kicad_sch		Author: Noah Husby
Size: A3	Rev: 1	Date: 2026-03-12
KiCad E.D.A. 9.0.8		Id: 4/4

Husby Labs
Chicago, IL
United States
opensource@husbylabs.com

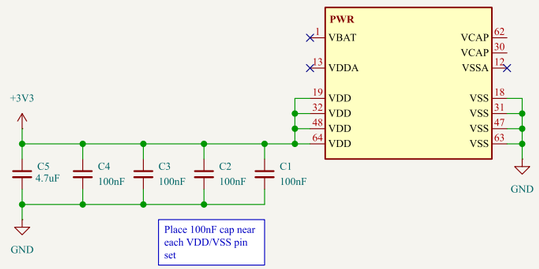

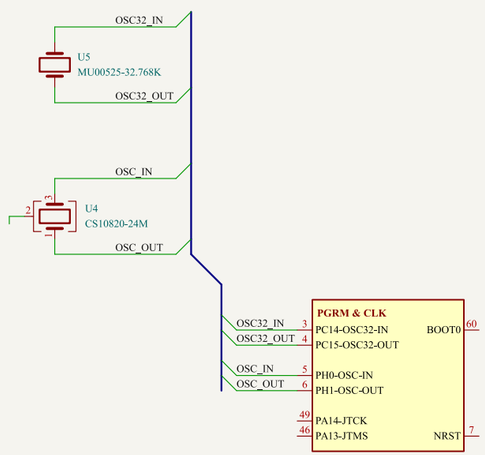

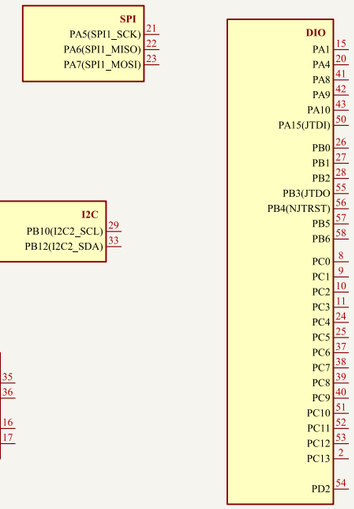

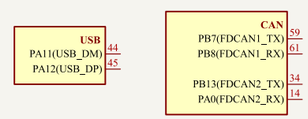

Title: **Microcontroller**		Husby Labs /OPENSOURCE
Project: **PM 2812 GPIB Controller**		
Sheet: /Overview/Microcontroller/		
File: microcontroller.kicad_sch		Author: Noah Husby
Size: A3	Rev: 1	Date: 2026-03-12
KiCad E.D.A. 9.0.8		Id: 2/4

Husby Labs
Chicago, IL
United States
opensource@husbylabs.com

Title:		Husby Labs /OPENSOURCE	
Project: **PM 2812 GPIB Controller**			
Sheet: /Overview/RS485 Transciever/			
File: transciever.kicad_sch		Author: Noah Husby	**Husby Labs** Chicago, IL United States *opensource@husbylabs.com*
Size: A3	Rev: 1	Date: 2026-03-12	
KiCad E.D.A. 9.0.8		Id: 3/4	