LINC (Laboratory Instrument Network Controller)

Designed by Noah Husby <opensource@husbylabs.com>

This module acts as a GPIB/HP-IB (General Purpose Interface Bus) controller that reads and sends commands to a PM2812 power supply.The USB-C port on the board allows serial communication with a computer to monitor the power supply. Additionally, an RS485 interface is exposed for a desk-mounted control panel which will display power supply status and allow for control.

This project is licensed under the CERN-OHL-P-v2 License

Overview

File: overview.kicad_sch

Title: **Project Overview**		Husby Labs /OPENSOURCE
Project: **LINC**		
Sheet: /		
File: LINC.kicad_sch		Author: Noah Husby
Size: A3	Rev: 0.1	Date: 2026-03-27
KiCad E.D.A. 10.0.0		Id: 1/6

Husby Labs
Chicago, IL
United States
opensource@husbylabs.com

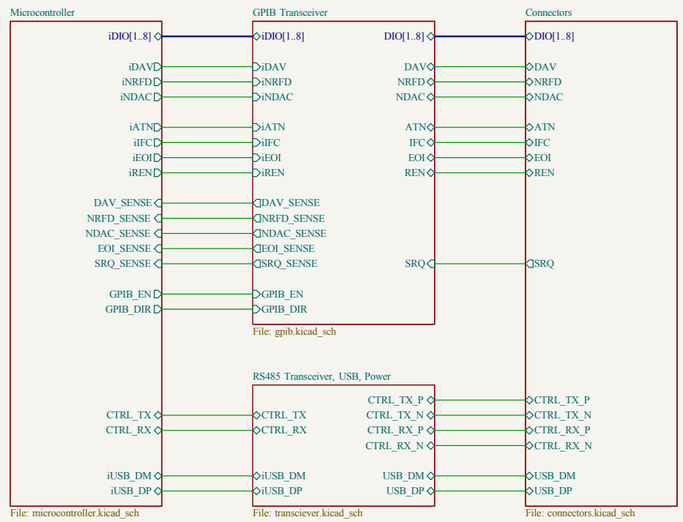

H1
MountingHole

H2
MountingHole

Title: **Overview**		Husby Labs /OPENSOURCE
Project: **LINC**		
Sheet: /Overview/		
File: overview.kicad_sch		Author: Noah Husby
Size: A3	Rev: 0.1	Date: 2026-03-27
KiCad E.D.A. 10.0.0		Id: 2/6

Husby Labs
Chicago, IL
United States
opensource@husbylabs.com

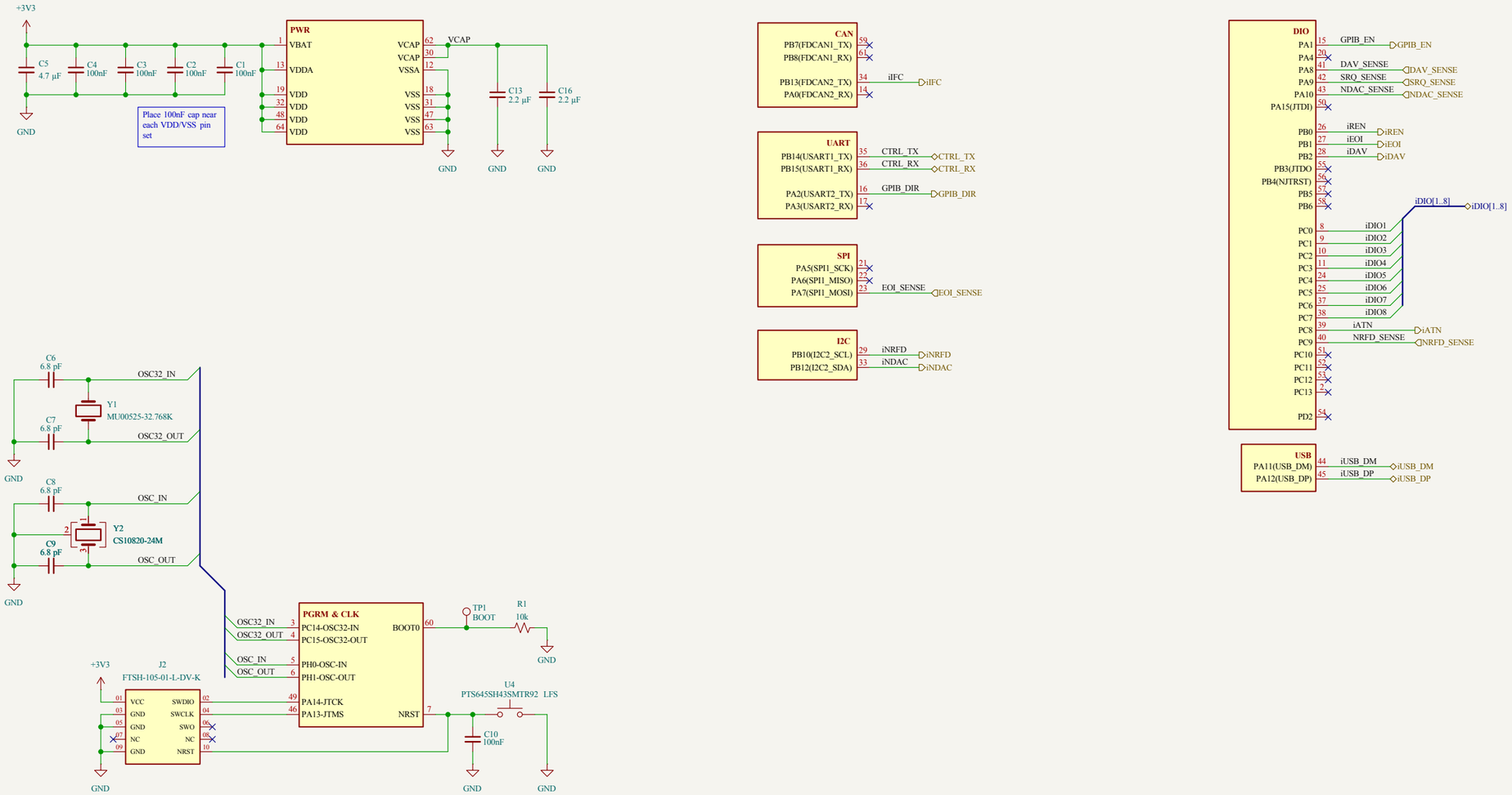

Title: **Microcontroller**	Husby Labs /OPENSOURCE
Project: **LINC**	
Sheet: /Overview/Microcontroller/	
File: microcontroller.kicad_sch	Author: Noah Husby
Size: A3 Rev: 0.1	Date: 2026-03-27
KiCad E.D.A. 10.0.0	Id: 3/6

Husby Labs
Chicago, IL
United States
opensource@husbylabs.com

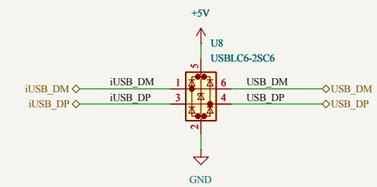

USB Protection

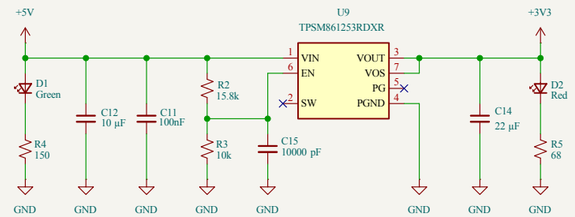

5V to 3V3 @ 1A

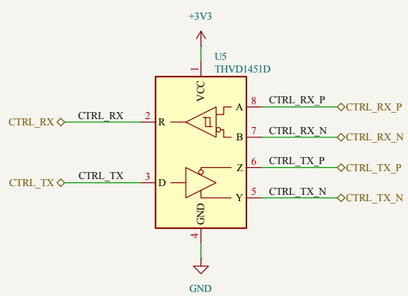

RS485 Transceiver

Title: **RS485, USB, Power**		Husby Labs /OPENSOURCE
Project: **LINC**		
Sheet: /Overview/RS485 Transceiver, USB, Power/		
File: transciever.kicad_sch	**Author: Noah Husby**	**Husby Labs** Chicago, IL United States *opensource@husbylabs.com*
Size: A3 Rev: 0.1	Date: 2026-03-27	
KiCad E.D.A. 10.0.0	Id: 4/6	

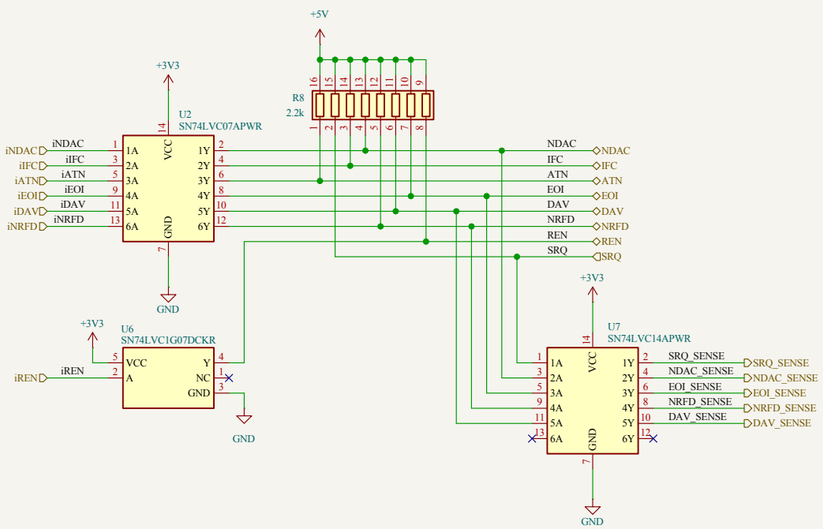

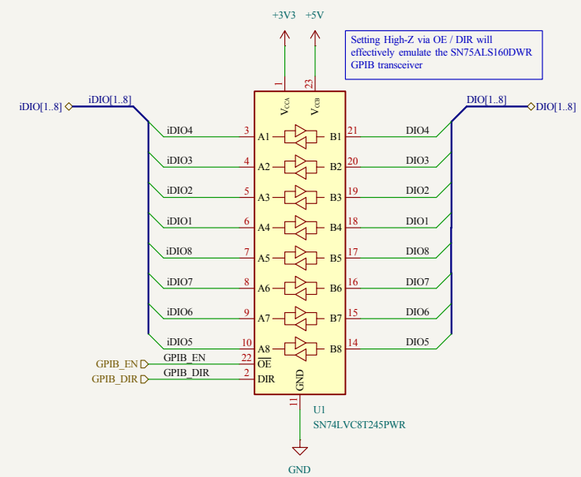

Title: **GPIB Transceiver**		Husby Labs /OPENSOURCE
Project: **LINC**		
Sheet: /Overview/GPIB Transceiver/		
File: gpib.kicad_sch		Author: Noah Husby
Size: A3	Rev: 0.1	Date: 2026-03-27
KiCad E.D.A. 10.0.0		Id: 5/6

Husby Labs
Chicago, IL
United States
opensource@husbylabs.com

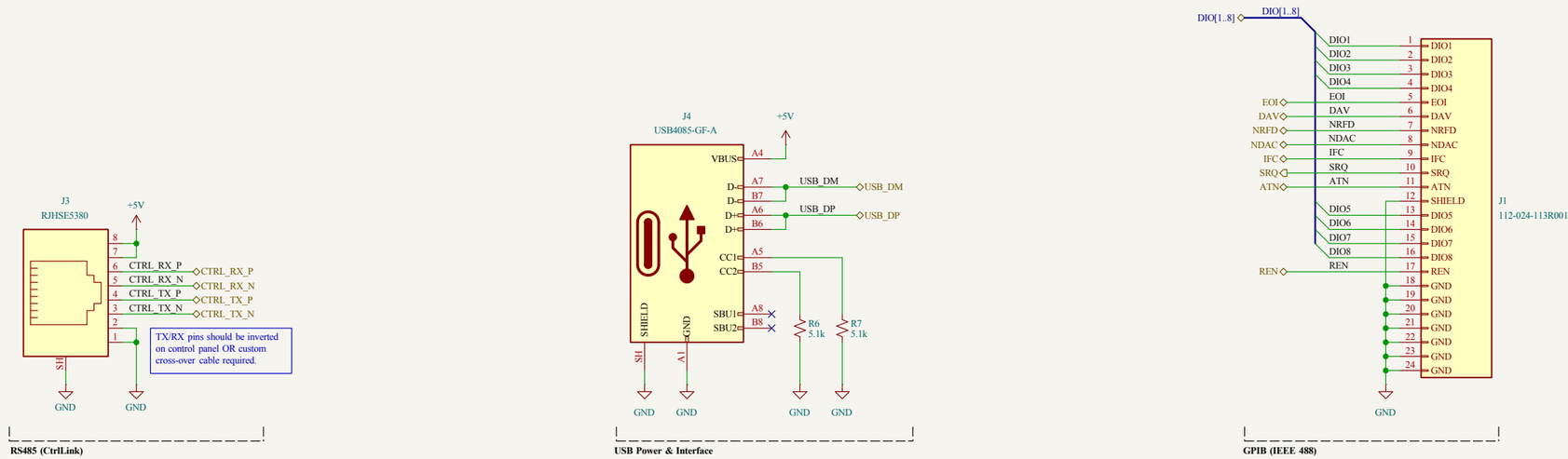

Title: **Connectors**	Husby Labs /OPENSOURCE
Project: **LINC**	
Sheet: /Overview/Connectors/	
File: connectors.kicad_sch	Author: Noah Husby
Size: A3 / Rev: 0.1	Date: 2026-03-27
KiCad E.D.A. 10.0.0	Id: 6/6

Husby Labs
Chicago, IL
United States
opensource@husbylabs.com