OpenAmbient

Open-source, privacy-preserving ambient monitoring platform designed for environmental data collection in clinical settings.

Main board

Status reading guide:

Draft: Early stage, ignore details.

Preliminary: Almost finished, could have some errors.

Checked: There shouldnt be any error, inform if that isnt the case.

Released: The schematic belongs to a design sent to production.

Status: Released

Release date: 03/03/26 (DD/MM/YY)

Variation: No variations

Revision: V0.1

Number of layers: 4

Micro/blind/buried vias: No

Related files: BOM, gerber files, and pick and place data

TITLE: Schematic Cover			REV: V0.1
OpenAmbient	Company: CabinPulse		Sheet: 1
	Date: 2026-03-03	Drawn By:	

Index:

Name	Page
Cover	1
Index	2
Power block diagram	3
Signal block diagram	4
BLE/WiFi ESP32S3 Core	5
BLE/WiFi ESP32S3 Miscellaneous	6
SIM7080 LTE	7
Power System	8
Sensors Temp, Mic, Acc, Hum, PIR	9
Sensors Spectral, Lux, Part, Gas	10
Mechanical	11

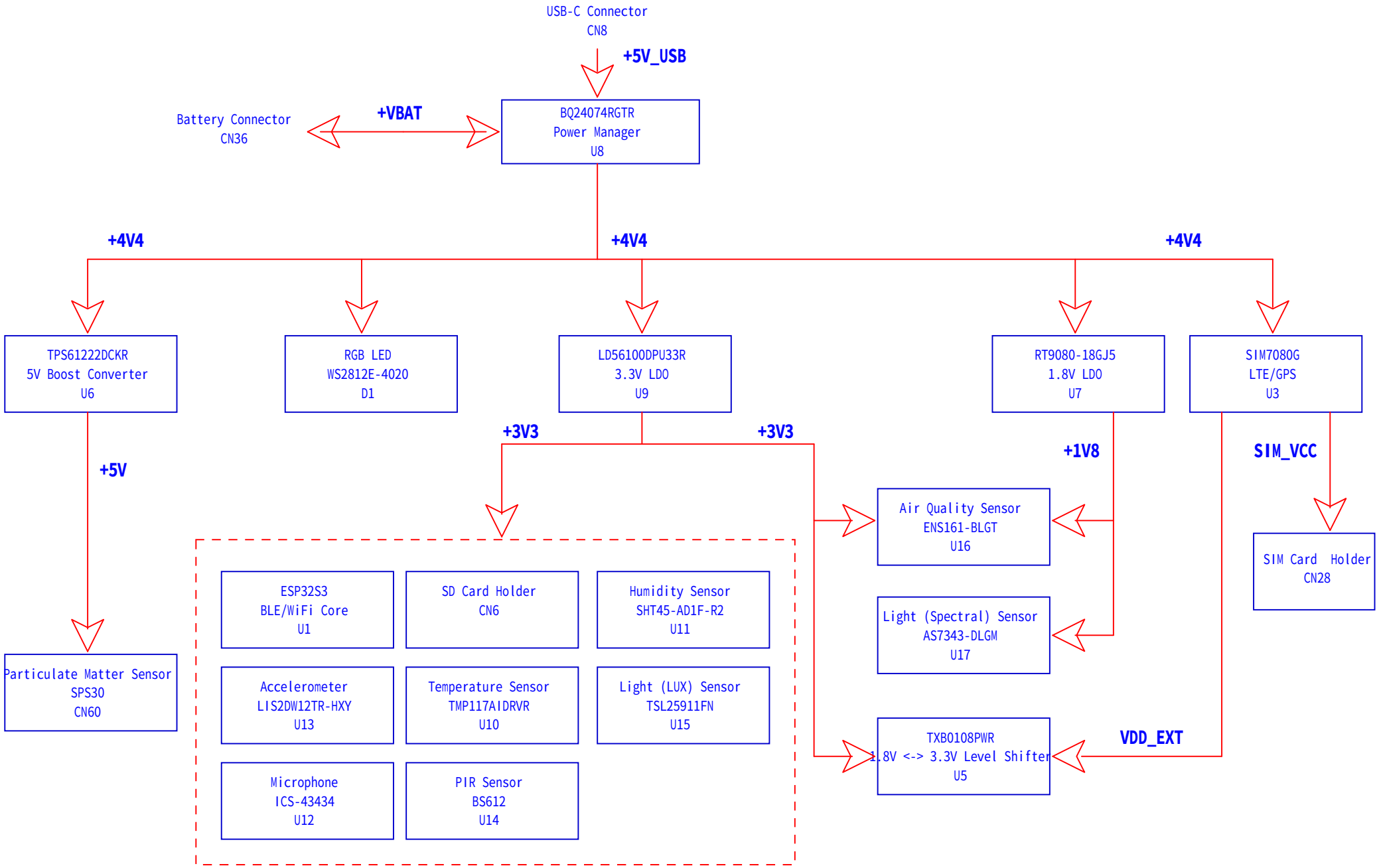

TITLE: Schematic	PowerBD		REV: V0.1
OpenAmbient	Company: CabinPulse		Sheet: 3
	Date: 2026-03-03	Drawn By:	

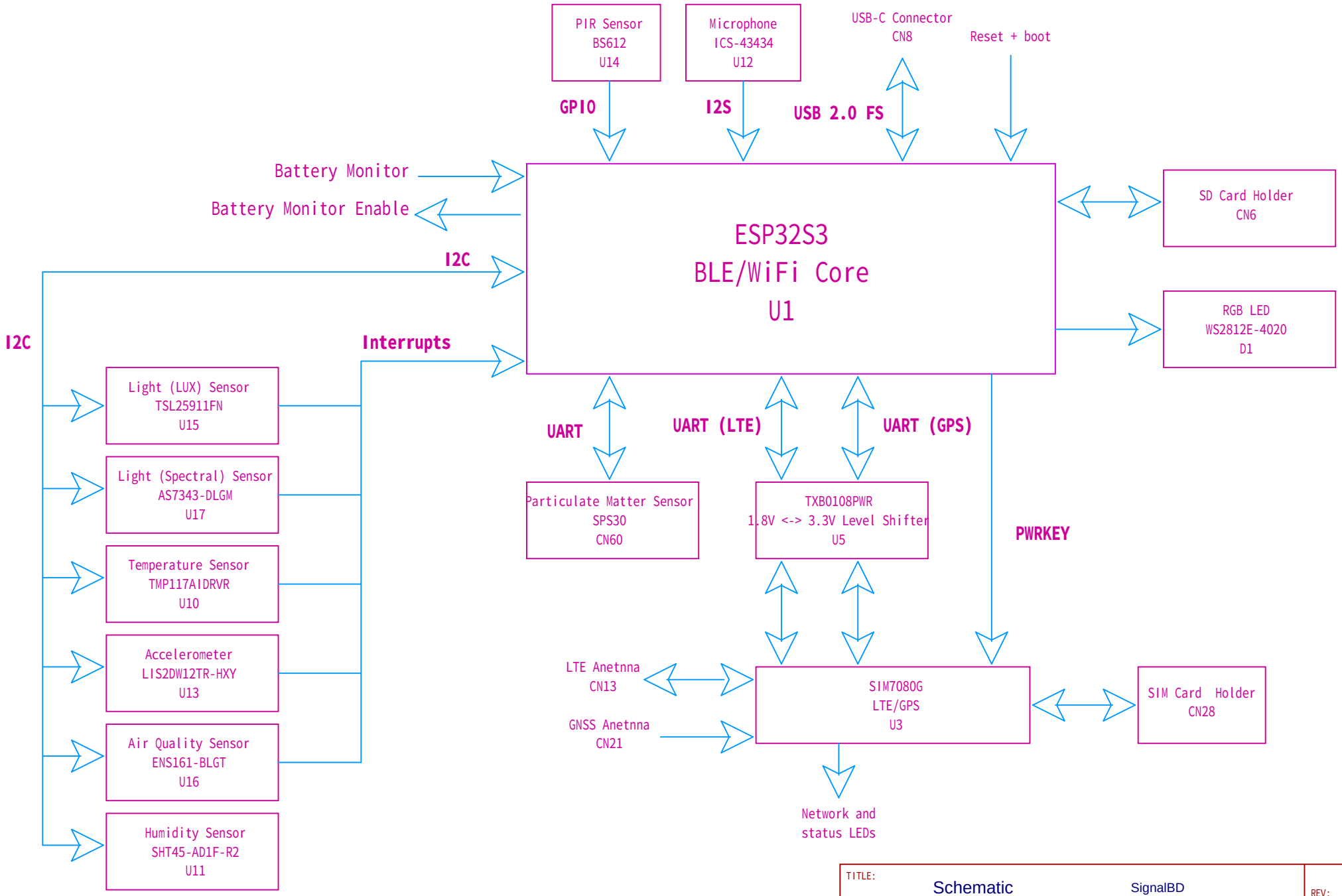

TITLE: Schematic	SignalBD		REV: V0.1
OpenAmbient	Company: CabinPulse		Sheet: 4
	Date: 2026-03-03	Drawn By:	

ESP32S3
BLE/WiFi Core

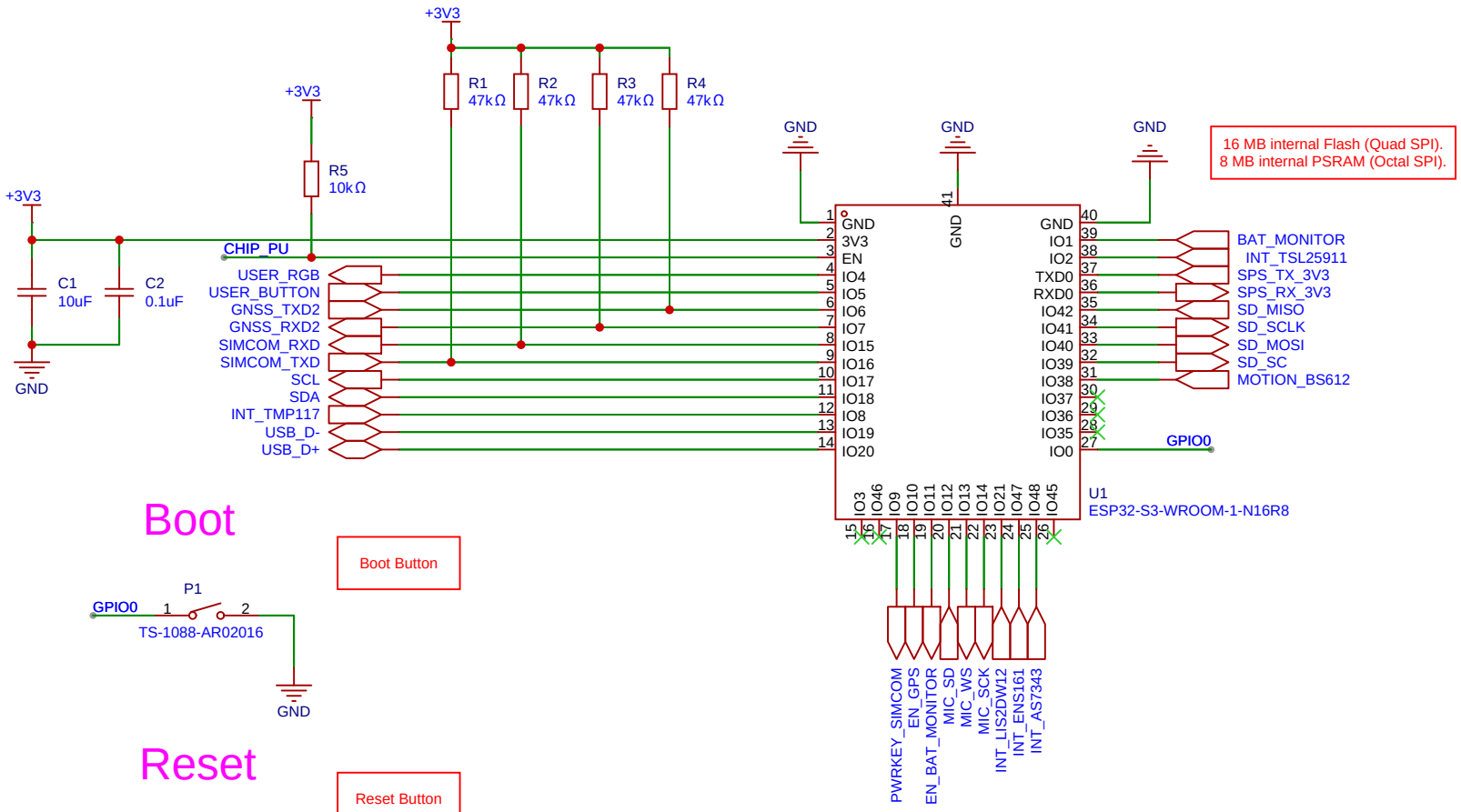

Boot

Boot Button

Reset

Reset Button

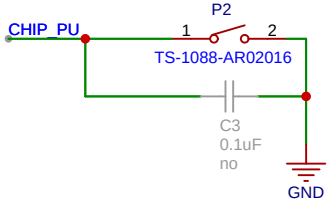

TITLE: Schematic	ESP32S3 Core		REV: V0.1
OpenAmbient	Company: CabinPulse		Sheet: 5
	Date: 2026-03-03	Drawn By:	

ESP32S3 Miscellaneous

RGB LED

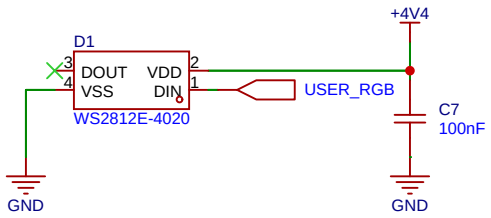

SD Card

Electrical card detection

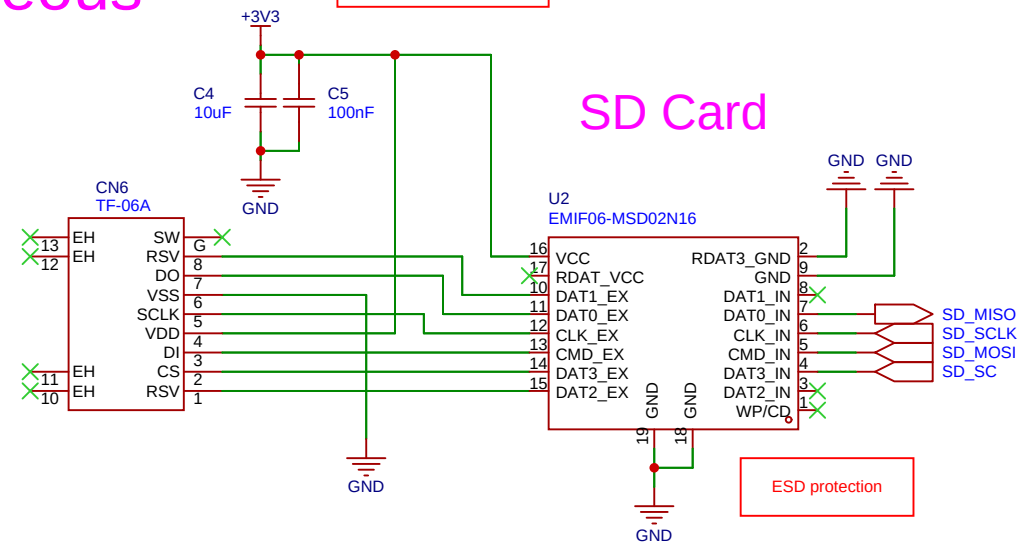

USB C

USB 2.0 FS, power and debug.

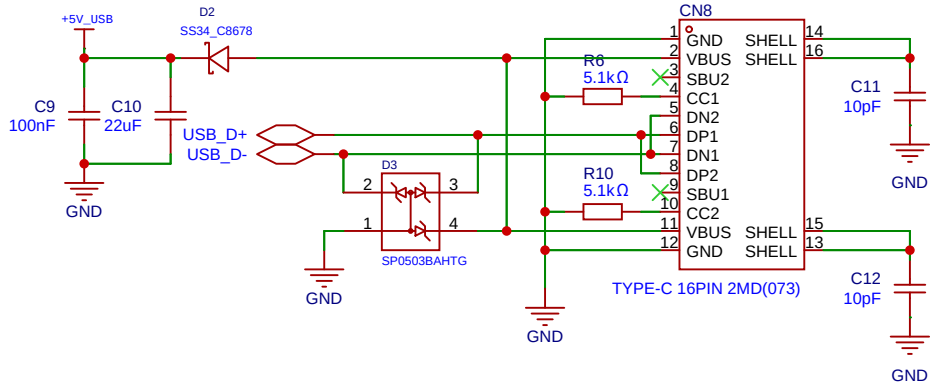

User Button

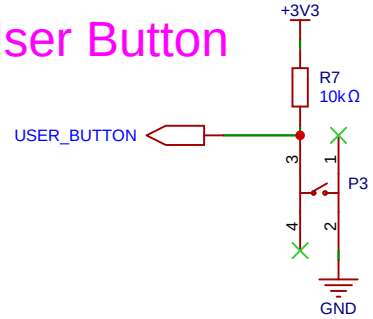

I2C pullups

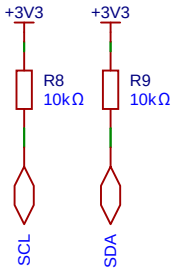

TITLE: Schematic	ESP32S3 Misc		REV: V0.1
OpenAmbient	Company: CabinPulse		Sheet: 6
	Date: 2026-03-03	Drawn By:	

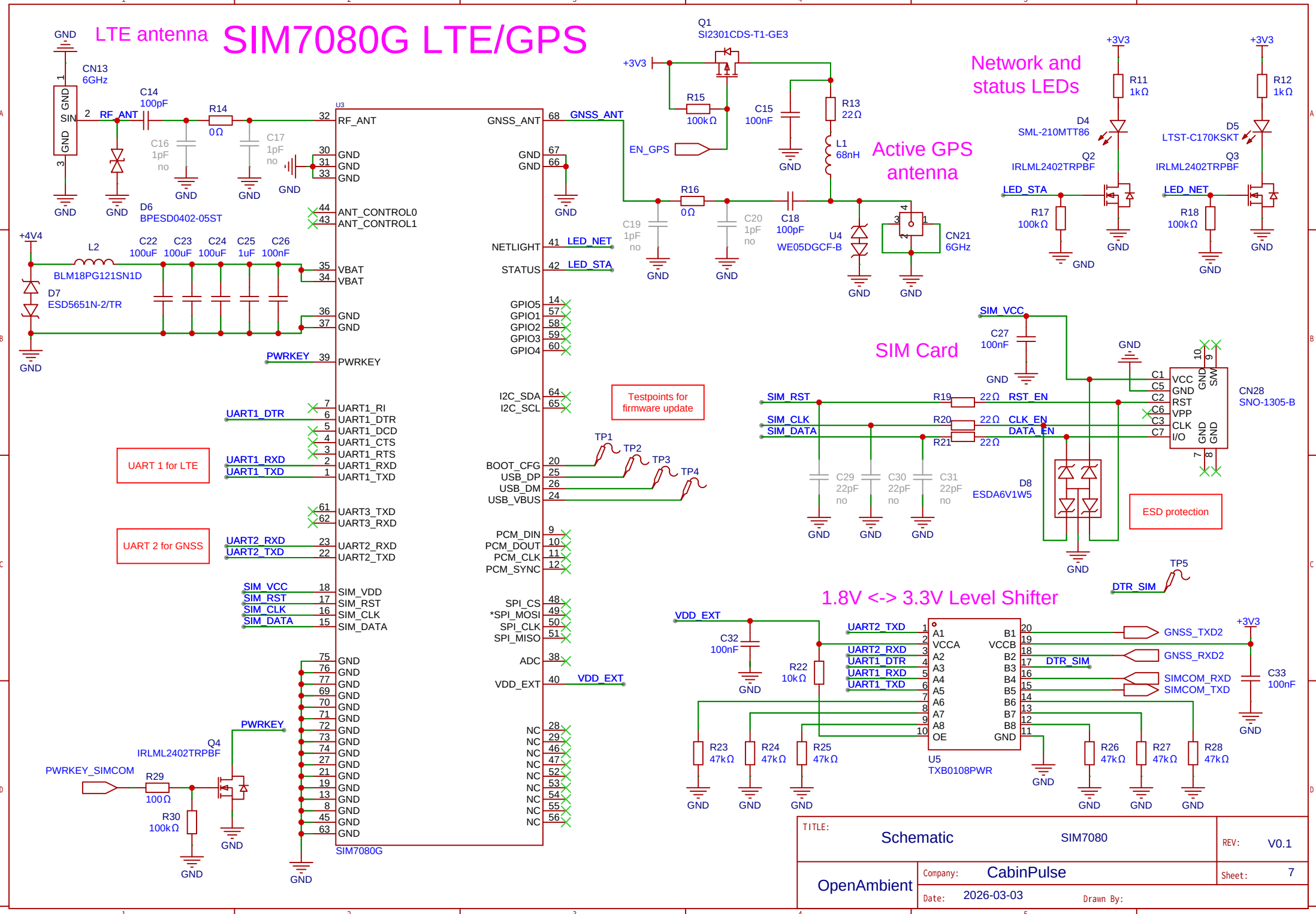
SIM7080G LTE/GPS
LTE antenna
CN13
6GHz
C14
100pF
R14
0Ω
C16
1pF
no
C17
1pF
no
D6
BPESD0402-05ST
RF_ANT
U3
SIM7080G
+4V4
L2
BLM18PG121SN1D
C22
100uF
C23
100uF
C24
100uF
C25
1uF
C26
100nF
D7
ESD5651N-2/TR
PWRKEY
PWRKEY_SIMCOM
Q4
IRLML2402TRPBF
R29
100Ω
R30
100kΩ
UART 1 for LTE
UART 2 for GNSS
UART1_DTR
UART1_RXD
UART1_TXD
UART2_RXD
UART2_TXD
SIM_VCC
SIM_RST
SIM_CLK
SIM_DATA
ANT_CONTROL0
ANT_CONTROL1
VBAT
GNSS_ANT
NETLIGHT
STATUS
LED_NET
LED_STA
GPIO5
GPIO1
GPIO2
GPIO3
GPIO4
I2C_SDA
I2C_SCL
BOOT_CFG
USB_DP
USB_DM
USB_VBUS
PCM_DIN
PCM_DOUT
PCM_CLK
PCM_SYNC
SPI_CS
*SPI_MOSI
SPI_CLK
SPI_MISO
ADC
VDD_EXT
Testpoints for firmware update
TP1
TP2
TP3
TP4
Q1
SI2301CDS-T1-GE3
+3V3
R15
100kΩ
EN_GPS
R16
0Ω
C19
1pF
no
C20
1pF
no
C15
100nF
R13
22Ω
L1
68nH
C18
100pF
U4
WE05DGCF-B
CN21
6GHz
Active GPS antenna
Network and status LEDs
R11
1kΩ
R12
1kΩ
D4
SML-210MTT86
D5
LTST-C170KSKT
Q2
IRLML2402TRPBF
Q3
IRLML2402TRPBF
R17
100kΩ
R18
100kΩ
SIM Card
C27
100nF
CN28
SNO-1305-B
R19
22Ω
R20
22Ω
R21
22Ω
RST_EN
CLK_EN
DATA_EN
C29
22pF
no
C30
22pF
no
C31
22pF
no
D8
ESDA6V1W5
ESD protection
TP5
DTR_SIM
1.8V <-> 3.3V Level Shifter
VDD_EXT
C32
100nF
R22
10kΩ
U5
TXB0108PWR
GNSS_TXD2
GNSS_RXD2
SIMCOM_RXD
SIMCOM_TXD
C33
100nF
R23
47kΩ
R24
47kΩ
R25
47kΩ
R26
47kΩ
R27
47kΩ
R28
47kΩ
GND
TITLE:
Schematic
SIM7080
REV:
V0.1
OpenAmbient
Company:
CabinPulse
Sheet:
7
Date:
2026-03-03
Drawn By:

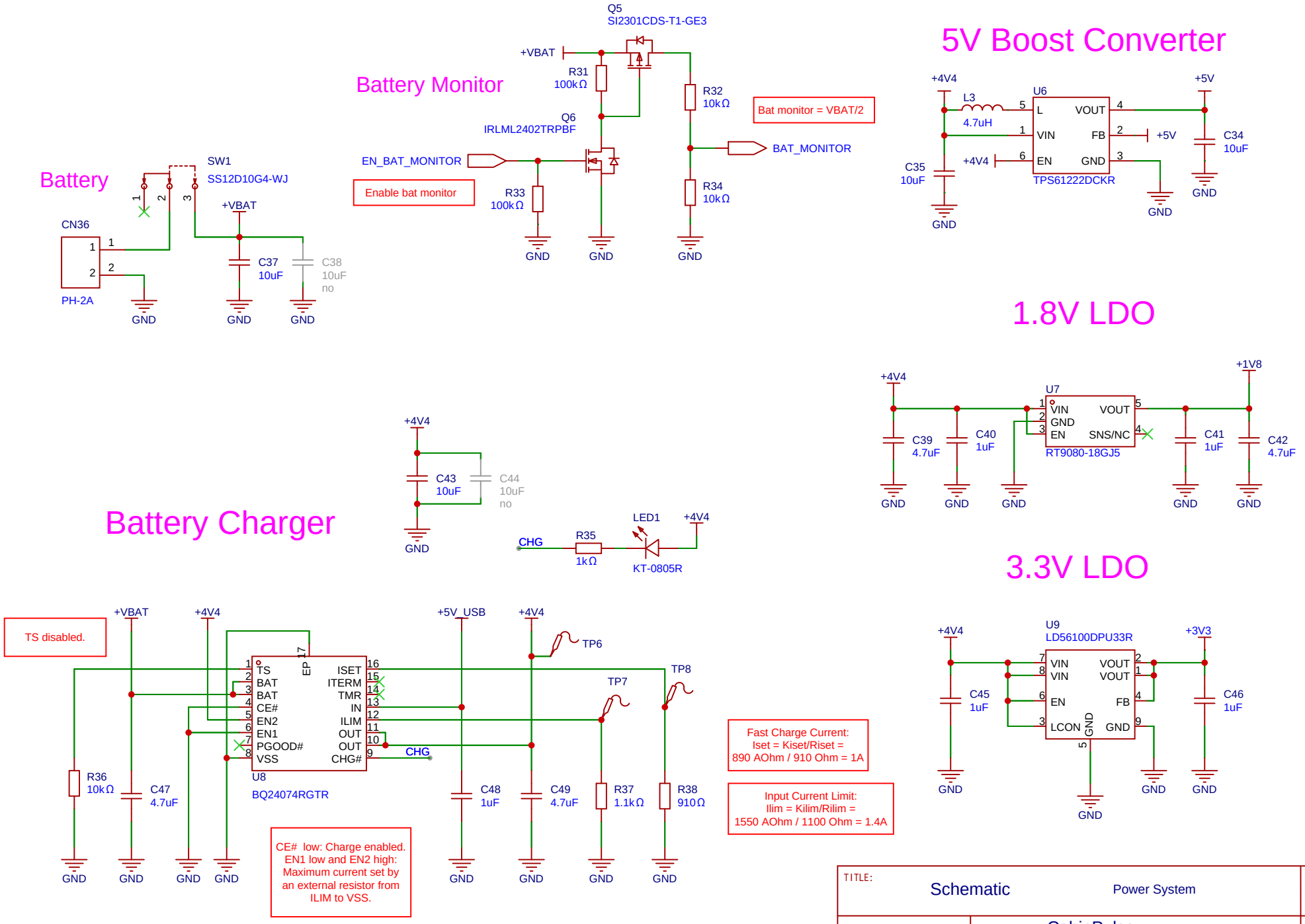

TITLE:	Schematic	Power System	REV: V0.1
OpenAmbient	Company: CabinPulse		Sheet: 8
	Date: 2026-03-03	Drawn By:	

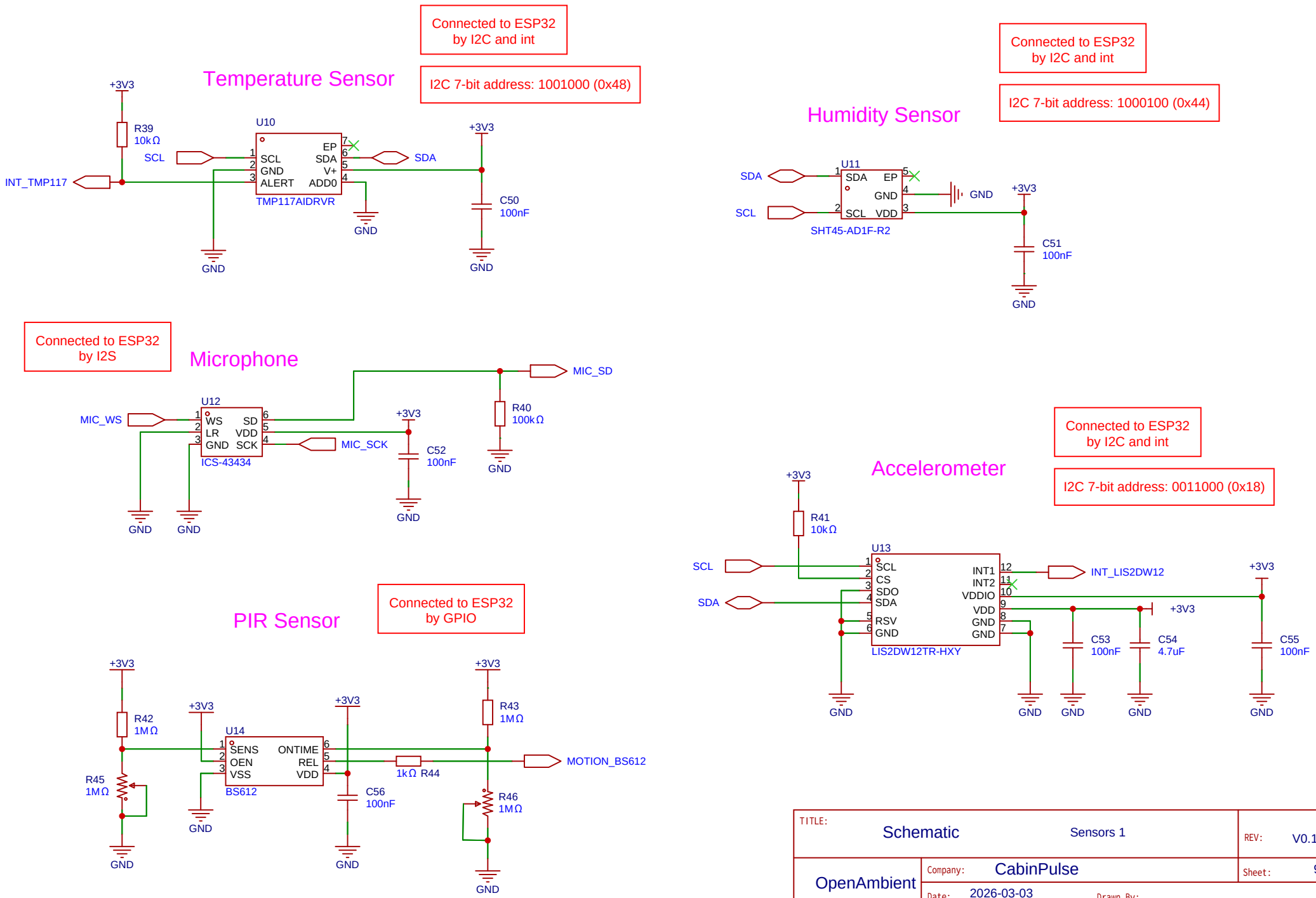
Temperature Sensor
Connected to ESP32 by I2C and int
I2C 7-bit address: 1001000 (0x48)
+3V3
R39 10kΩ
SCL
INT_TMP117
U10
SCL
GND
ALERT
EP
SDA
V+
ADD0
TMP117AIDRVR
SDA
C50 100nF
GND
Humidity Sensor
Connected to ESP32 by I2C and int
I2C 7-bit address: 1000100 (0x44)
U11
SDA
SCL
EP
GND
VDD
SHT45-AD1F-R2
C51 100nF
Microphone
Connected to ESP32 by I2S
MIC_SD
MIC_WS
U12
WS
LR
GND
SD
VDD
SCK
ICS-43434
MIC_SCK
C52 100nF
R40 100kΩ
Accelerometer
Connected to ESP32 by I2C and int
I2C 7-bit address: 0011000 (0x18)
R41 10kΩ
U13
SCL
CS
SDO
SDA
RSV
GND
INT1
INT2
VDDIO
VDD
LIS2DW12TR-HXY
INT_LIS2DW12
C53 100nF
C54 4.7uF
C55 100nF
PIR Sensor
Connected to ESP32 by GPIO
R42 1MΩ
R45 1MΩ
U14
SENS
OEN
VSS
ONTIME
REL
VDD
BS612
C56 100nF
1kΩ R44
R43 1MΩ
R46 1MΩ
MOTION_BS612
TITLE: Schematic
Sensors 1
REV: V0.1
OpenAmbient
Company: CabinPulse
Sheet: 9
Date: 2026-03-03
Drawn By:

Connected to ESP32
by I2C and int

I2C 7-bit address: 0101001 (0x29)

Light (LUX) Sensor

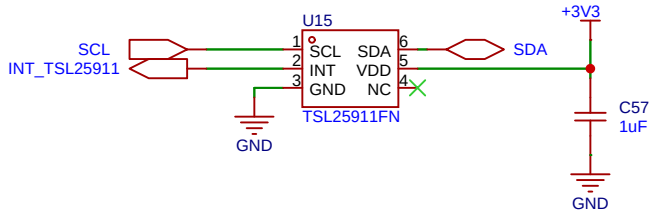

Connected to ESP32
by I2C and int

I2C 7-bit address: 1010011 (0x53)

Air Quality Sensor

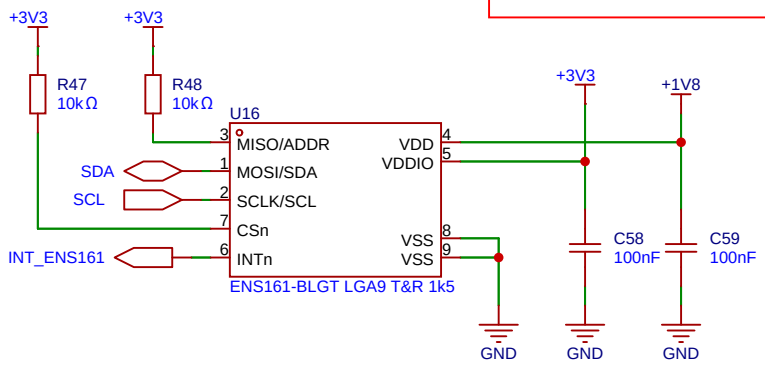

Connected to ESP32
by I2C and int

I2C 7-bit address: 0111001 (0x39)

Light (Spectral) Sensor

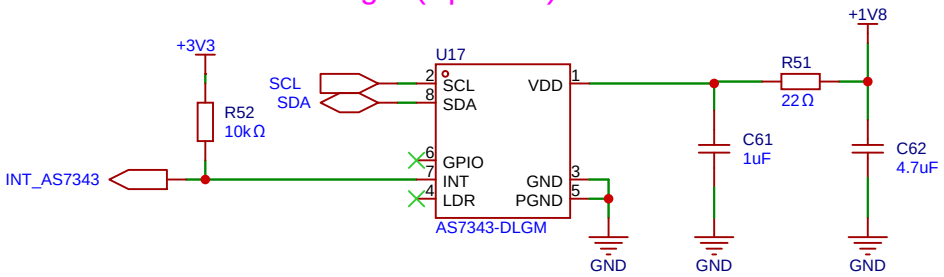

Particulate Matter Sensor

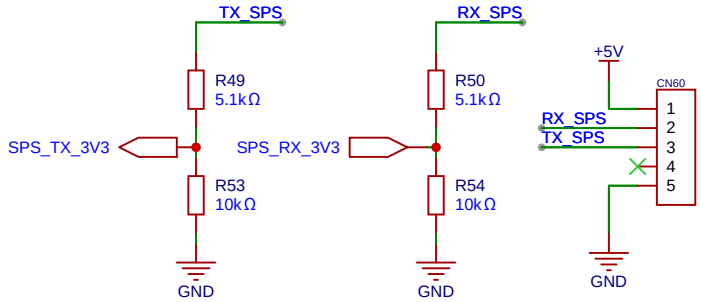

TITLE: Schematic	Sensors 2		REV: V0.1
OpenAmbient	Company: CabinPulse		Sheet: 10
	Date: 2026-03-03	Drawn By:	

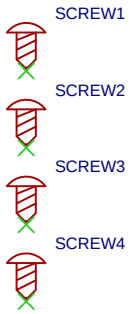

TITLE: Schematic		Mechanical	REV: V0.1
OpenAmbient	Company: CabinPulse		Sheet: 11
	Date: 2026-03-02	Drawn By:	