OpenAmbient V0.1 Hardware Design Documentation

Table of contents

Overview 2

Introduction: 2

PCB 3D render pictures: 3

Blocks Description: 5

- ESP32S3: 6
  - List of pin connections: 6
  - Strapping pins: 9
  - JTAG Interface: 9
  - Pins GPIO35/36/37: 10
  - I2C Interface: 10
  - USB, User Button, Boot and reset: 10
- SIM7080G Modem: 11
- Built-in sensors: 11

Power Supply Scheme: 11

Testing: 12

- Testpoints: 12
- Do Not Place options: 13

PCB Layout: 15
WiFi/BLE antenna placement: 17
Vendor recommendations, taken from "ESP32-S3 Hardware Design Guidelines" 19
Layer stackup: 19
Controlled impedance: 20
USB: 20
RF tracks: 21
PCB Manufacturing Information: 25
Summary of manufacturing files: 25
Manufacturing specifications: 26

Overview

This document details the main aspects of the hardware design for the OpenAmbient Revision V0.1 project. The following information is included:

- Overall PCB architecture.
- Detailed description of each block comprising the PCB.
- Firmware-related information, such as MCU pins used, I2C addresses, configurations, etc.
- PCB layout aspects, such as PCB stack-up used, Floorplan, Controlled Impedance, etc.
- Testing information, such as testpoint description, PCB configurations, etc.
- Manufacturing Information.

Introduction:

The OpenAmbient Hardware uses an ESP32 module (ESP32-S3-WROOM) as WiFi and BLE modem, a SIMCOM SIM7080G as LTE module and GNSS receiver, and a rich set of sensors and power management components.

Below is a brief description of the PCB main characteristics:

- Wireless connectivity:
  - LTE-M/NB-IoT (external antenna).
  - WiFi and BLE (built-in antenna).
  - GPS (external antenna).
- Built-In sensors:
  - Temperature.
  - Humidity.
  - PIR.
  - Air Quality.
  - Accelerometer.
  - Microphone.
  - Light (LUX and Spectral).
  - Particulate Matter.
- Power:
  - 1 cell Li-Ion battery supply.
  - Built-in Li-Ion battery charger.
  - USB-C connector for battery charging.
- User interface:
  - User button.
  - User RGB LED.
- Testing and debugging:
  - USB-C 2.0 FS for ESP32 flashing and debugging.
  - Testpoints and different configurations using DNP components.

PCB 3D render pictures:

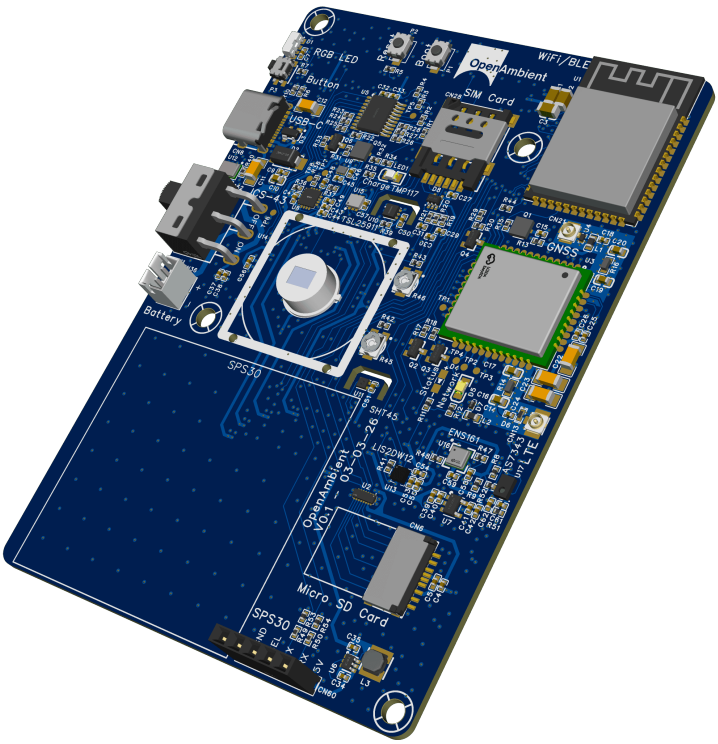

Oblique View

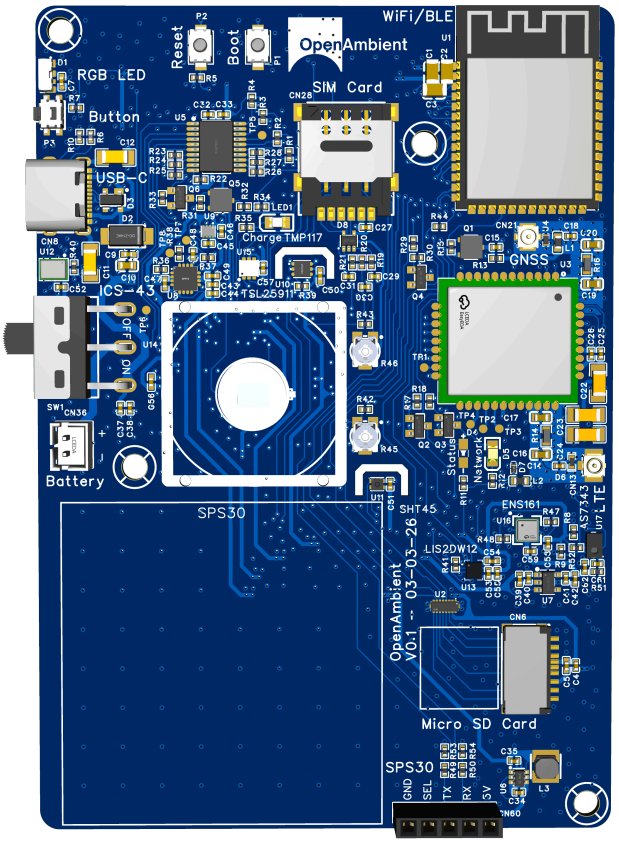

Top View

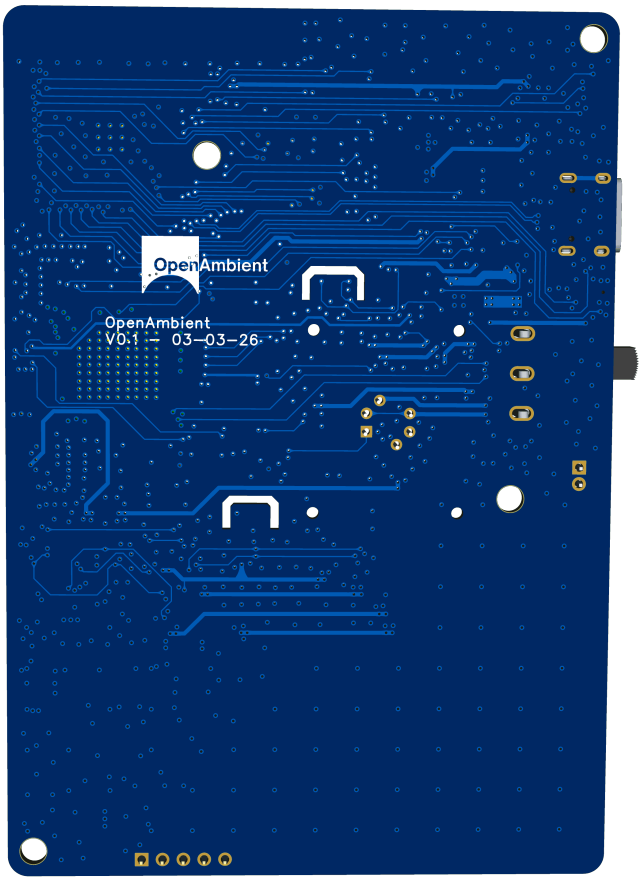

Bottom View

Blocks Description:

The schematic of the PCB comprises the following blocks:

- ESP32S3 SoC and surrounding circuitry.
- SIM7080G LTE modem and its surrounding circuitry.
- Power System.
- Built-in sensors.

Signal Block Diagram:

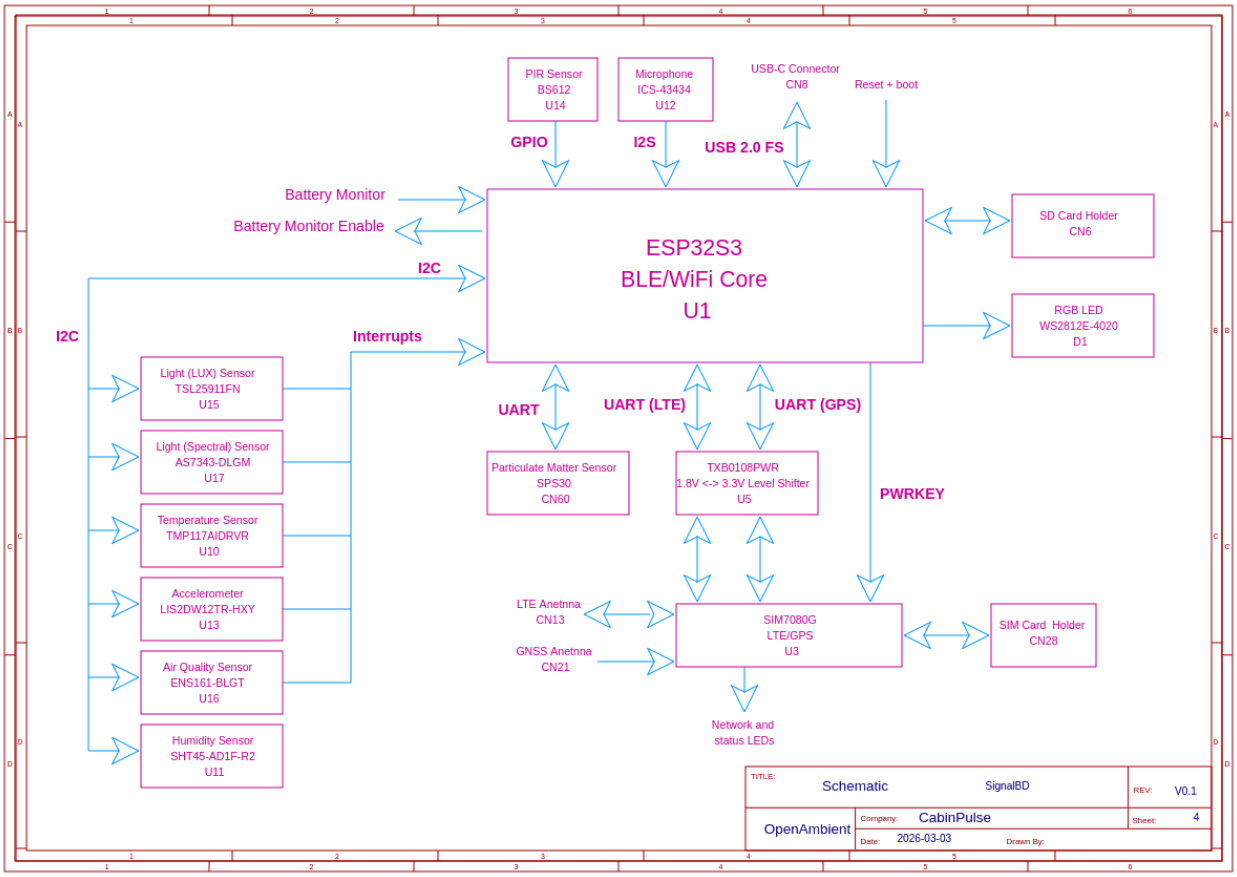

ESP32S3:

The ESP32S3 module exact part number is: ESP32-S3-WROOM-1-N16R8:

- Built-in WiFi/BLE antenna.
- 16MB of embedded QSPI Flash memory.
- 8MB of embedded OSPI PSRAM memory.

List of pin connections:

ESP32 Module pin name	ESP32 SoC pin name	Device connected	In/Out (as from ESP32)	Description
IO4	GPIO4	USER RGB	Out	RGB LED data.

IO5	GPIO5	USER BUTTON	In	General Purpose user button.
IO6	GPIO6	GNSS UART TX	In	SIM7080G GNSS UART interface, TX signal.
IO7	GPIO7	GNSS UART RX	Out	SIM7080G GNSS UART interface, RX signal.
IO15	XTAL_32K_P	LTE UART RX	Out	SIM7080G LTE UART interface, RX signal.
IO16	XTAL_32K_N	LTE UART TX	In	SIM7080G LTE UART interface, TX signal.
IO17	GPIO17	I2C SCL	Out	I2C bus SCL signal.
IO18	GPIO18	I2C SDA	In/Out	I2C bus SDA signal.
IO8	GPIO8	INT TMP117	In	TMP117 temperature sensor interrupt line.
IO19	GPIO19	USB D-	In/Out	Debug/flash USB negative data line.
IO20	GPIO20	USB D+	In/Out	Debug/flash USB positive data line.
IO3	GPIO3	Not used.	-----	Strapping pin.
IO46	GPIO46	Not used.	-----	Strapping pin.
IO9	GPIO9	SIM7080G PowerKey	Out	PowerKey signal for SIM7080G.
IO10	GPIO10	EN GPS	Out	GNSS Supply enable signal, active high.
IO11	GPIO11	EN BAT monitor	Out	Battery monitor circuitry enable.

IO12	GPIO12	MIC SD	In	ICS-43434 Microphone data signal.
IO13	GPIO13	MIC WS	Out	ICS-43434 Microphone Word Select signal.
IO14	GPIO14	MIC SCK	Out	ICS-43434 Microphone clock signal.
IO21	GPIO21	INT LIS2DW12	In	LIS2DW12 Accelerometer interrupt line.
IO47	SPICLK_P	INT ENS161	In	ENS161 Air Quality sensor interrupt line.
IO48	SPICLK_N	INT AS7343	In	AS7343 Light Spectrum sensor interrupt line.
IO45	GPIO45	Not used.	-----	Strapping pin.
IO0	GPIO0	Boot	In	Boot signal to trigger the bootloader. Used to flash the device by USB.
IO35	GPIO35	Not used	Not used	This signal is used by internal PSRAM and cannot be used for other purposes.
IO36	GPIO36	Not used	Not used	This signal is used by internal PSRAM and cannot be used for other purposes.
IO37	GPIO37	Not used	Not used	This signal is used by internal PSRAM and cannot be used for other purposes.
IO38	GPIO38	MOTION BS612	In	BS612 PIR sensor trigger line.
IO39	MTCK	SD SC	Out	SPI Chip Select signal for SD Card.

IO40	MTDO	SD MOSI	Out	SPI MOSI signal for SD Card.
IO41	MTDI	SD SCLK	Out	SPI serial clock signal for SD Card.
IO42	MTMS	SD MISO	In	SPI MISO signal for SD Card.
RXD0	U0RXD	SPS30 UART RX	Out	SPS30 particulate matter sensor RX signal.
TXD0	U0TXD	SPS30 UART TX	In	SPS30 particulate matter sensor TX signal.
IO2	GPIO2	INT TSL25911	In	TSL25911 Light (LUX) sensor interrupt line.
IO1	GPIO1	BAT monitor	In	Battery monitor analog voltage, equal to VBAT/2. Must be enabled first using EN BAT monitor.

Strapping pins:

The ESP32-S3 has 4 strapping pins:

- GPIO0
- GPIO3
- GPIO45
- GPIO46

These pins are sampled right after reset and define the behavior of the chip during booting. GPIO0 is used to trigger the bootloader and flash the device using USB-C. None of the other pins were used, so they read their corresponding default configuration.

JTAG Interface:

The JTAG interface is not accesible, the device must be flashed by USB-C.

Pins GPIO35/36/37:

Pins GPIO35, GPIO36 and GPIO37 are used internally by the ESP32S3 built-in PSRAM (Octa SPI interface), so they cannot be used nor connected externally. For that reason, they have been left unconnected.

I2C Interface:

The I2C interface allows communication from the ESP32S3 to most sensors. The following table details the specific devices that can be reached using I2C and their corresponding I2C address (7-bit):

- TMP117AIDRVR temp sensor: 1001000 (0x48).
- LIS2DW12TR accelerometer: 0011000 (0x18).
- SHT45 humidity sensor: 1000100 (0x44).
- TSL25911 Light (LUX) Sensor: 0101001 (0x29).
- AS7343 Light (Spectral) Sensor: 0111001 (0x39).
- ENS161 Air Quality Sensor: 1010011 (0x53).

The pull-ups resistors used for the I2C interface are 10kOhm, for both the SCL and SDA signals.

USB, User Button, Boot and reset:

The board includes a boot button to place the ESP32 in boot mode and allow it to boot from USB. UART butting is not possible (due to the UART pins being used for other purposes).

The user button is active low, and has a hardware-level pull-up, so its corresponding ESP32 pin doesn't need to have the internal pull-up activated.

The USB interface is used to flash and debug the ESP32 through the built-in USB-JTAG converter.

The ESP32 can be reset by either the reset button.

SIM7080G Modem:

To design the SIM7080G circuitry, the official SIMCOM documentation was followed:

- Hardware Design Guidelines.
- Product Specification.

The SIM7080G is connected to the ESP32-S3 through 2 UART ports, one used to send AT commands and intended for LTE and another one for GNSS.

ESD protection and dummy matching networks are included for both GNSS and LTE antennas. The GPS antenna connector provides 3.3V to supply an active antenna.

The module has two LEDs: A network LED that shows connectivity status and a general status LED.

A 3.3V to 1.8V level shifter is used to match the 1.8V signals from the SIM7080G and the 3.3V signals from the ESP32S3.

The Power Key signal can be used to reset the module from the ESP32 firmware.

Built-in sensors:

The board features the following built-in sensors:

- TMP117: Temperature (I2C plus interrupt).
- LIS2DW12: Accelerometer (I2C plus interrupt).
- ICS-43434: Microphone (I2S).
- SHT45: Humidity sensor (I2C).
- BS612: PIR sensor (GPIO).
- AS7343: Light (Spectral) sensor (I2C plus interrupt).
- TSL25911: Light (LUX) sensor (I2C plus interrupt).
- ENS161: Air Quality sensor (I2C plus interrupt).
- SPS30: Particulate Matter sensor, through external connector (UART).

Power Supply Scheme:

The following picture shows the power supply scheme of the PCB:

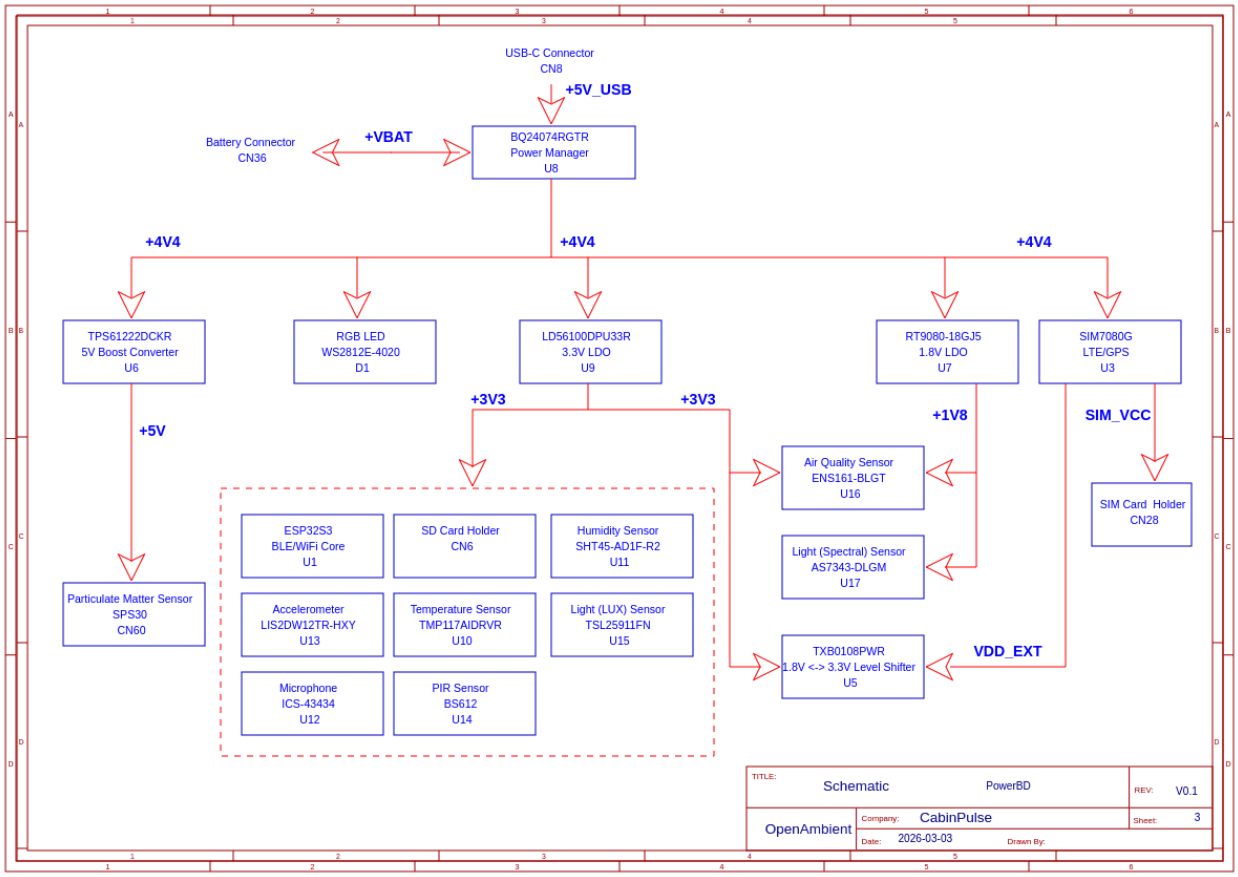

The battery charging and discharging are managed by the BQ24074 device. This device generates the 4.4V rail, which supplies all other components directly or indirectly.

To generate the 3.3V for the ESP32 and sensors, an LD56100 LDO is used. Some sensors require 1.8V as well, so the RT9080-18 is included as 1.8V LDO. Finally, a 5V boost converter is included to supply the SPS30, implemented using a TPS61222.

A battery monitoring circuitry is included to allow measuring the battery voltage at the ESP32 firmware level.

Testing:

Testpoints:

To aid in testing, several testpoints are provided in the PCB:

Designator	Description
TP1	SIM7080G Boot configuration.
TP2	SIM7080G USB 2.0 DP signal.
TP3	SIM7080G USB 2.0 DM signal.
TP4	SIM7080G USB VBUS.
TP5	SIM7080G UART 1 DTR signal (3.3V level).
TP6	4.4V supply rail.
TP7	BQ24074 ILIM signal.
TP8	BQ24074 ISET signal

Do Not Place options:

The board has several components marked as DNP that can be used to solve potential EMC/EMI and crosstalk issues, as well as antenna impedance mismatch issues:

Designator	Default Value	On behavior	Off Behavior	Comments
C38	Not placed	-----	-----	Used to add capacitance to VBAT node in case it is needed.
C44	Not placed	-----	-----	Used to add capacitance to +4V4 node in case it is needed.
				Used to smooth rise

C29	Not placed	-----	-----	and fall times in case of crosstalk or EMC/EMI issues with SIM card interface.
C30	Not placed	-----	-----	Used to smooth rise and fall times in case of crosstalk or EMC/EMI issues with SIM card interface.
C31	Not placed	-----	-----	Used to smooth rise and fall times in case of crosstalk or EMC/EMI issues with SIM card interface.
C16	Not placed	-----	-----	Used to match LTE antenna in case of mismatch.
C17	Not placed	-----	-----	Used to match LTE antenna in case of mismatch.
R14	0R	-----	-----	Used to match LTE antenna in case of mismatch.
C19	Not placed	-----	-----	Used to match GNSS antenna in case of mismatch.
C20	Not placed	-----	-----	Used to match GNSS antenna in case of mismatch.
R16	0R	-----	-----	Used to match GNSS antenna in case of

				mismatch.
C3	Not placed	-----	-----	Used to reduce bouncing at reset button.

PCB Layout:

Routing:

To route the tracks, orthogonal routing in the top and bottom layer was used, leaving both the in1 and in2 inner layers as dedicated GND planes. Also, plenty of stitching vias were used where signals transitioned from one layer to the other.

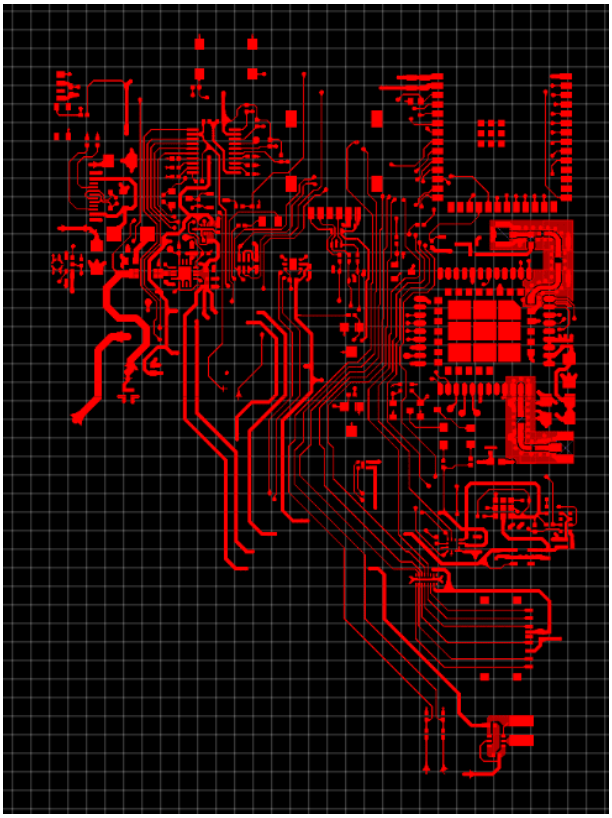

Top layer routing

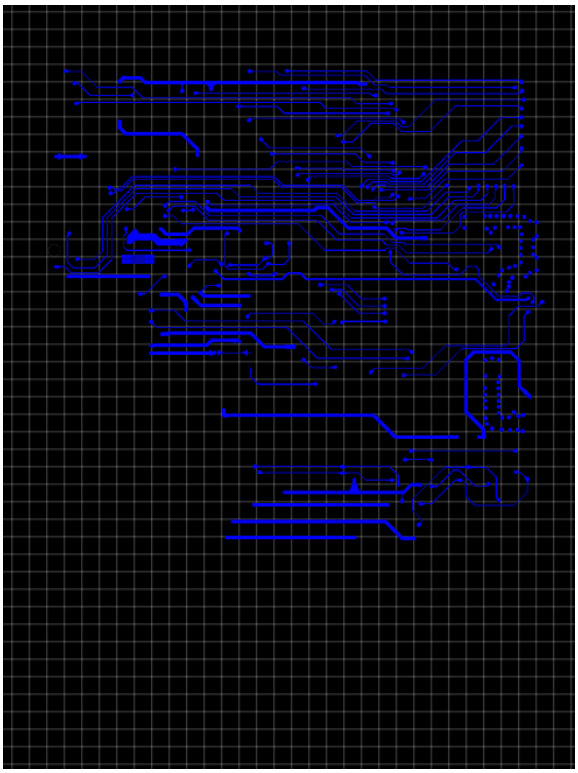

Bottom layer routing

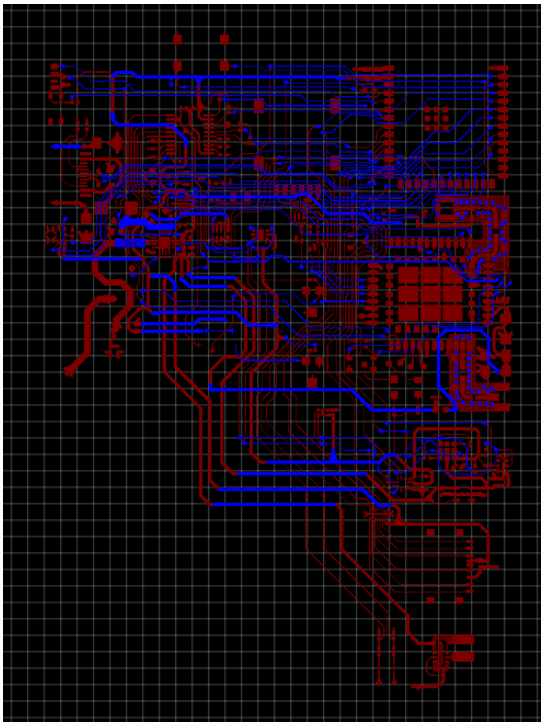

Top and Bottom layers routing superposed

WiFi/BLE antenna placement:

The ESP32-S3 was placed following the vendor recommendations to maximize the antenna performance and reduce potential EMC/EMI issues:

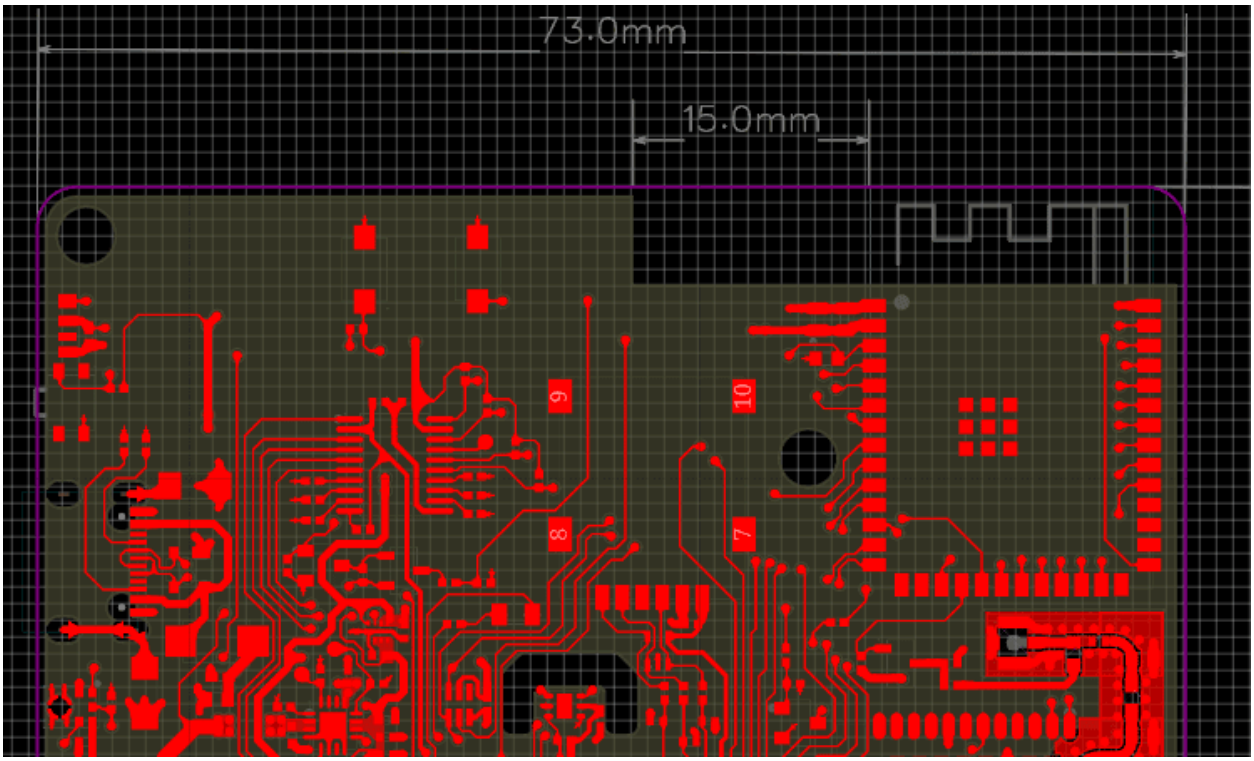

Wifi/BLE antenna placement in the board

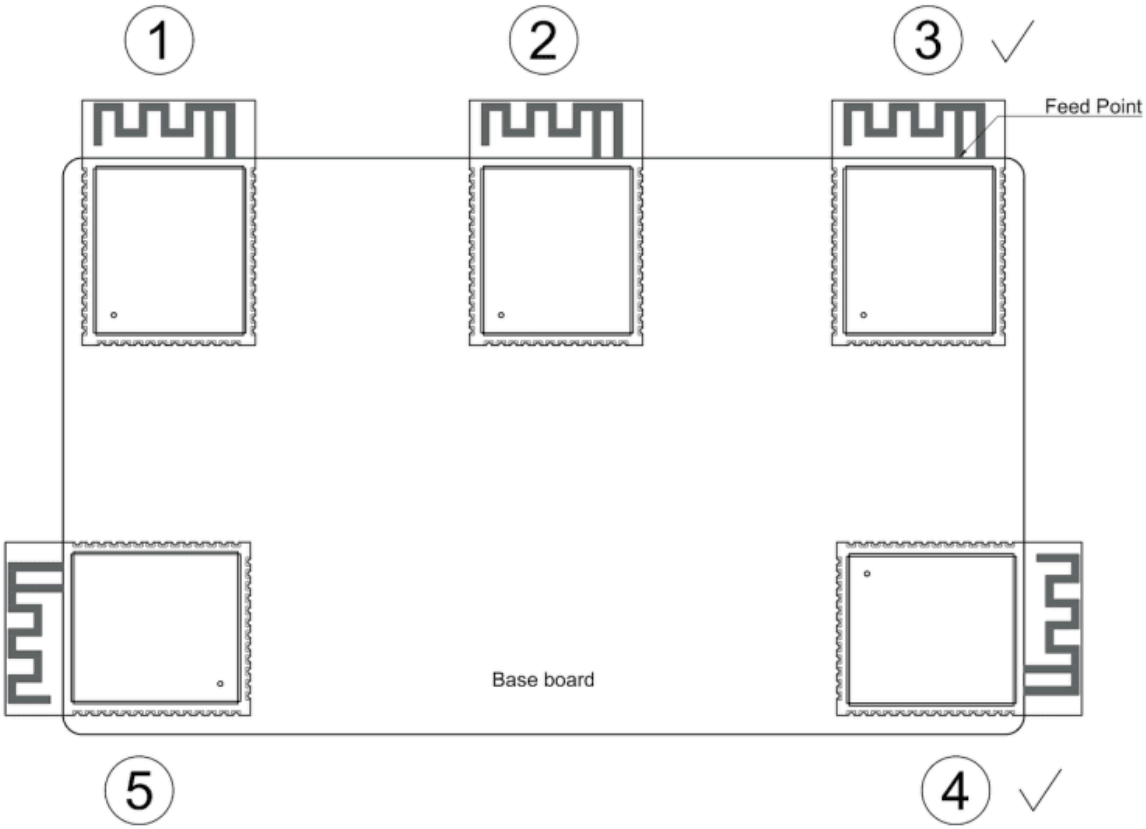

Fig. 24: Placement of ESP32-S3 Modules on Base Board (antenna feed point on the right)

Vendor recommendations, taken from "ESP32-S3 Hardware Design Guidelines"

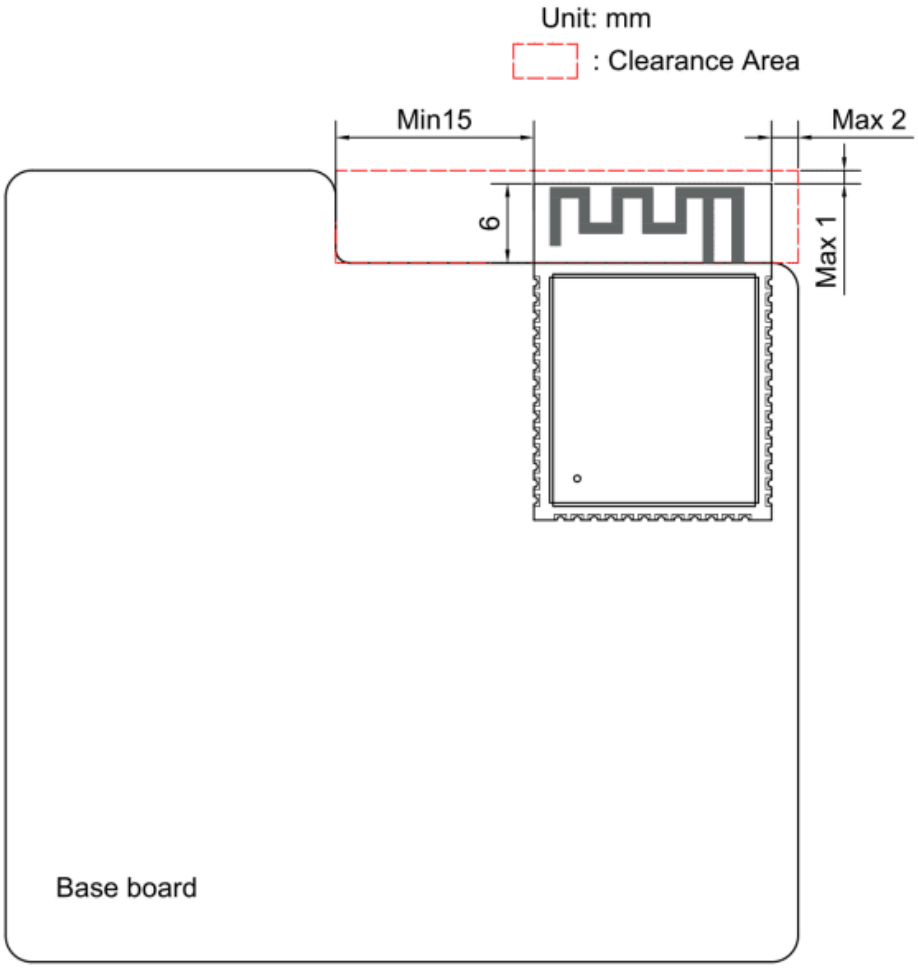

Fig. 26: Keepout Zone for ESP32-S3 Module' s Antenna on the Base Board

Vendor recommendations, taken from "ESP32-S3 Hardware Design Guidelines"

Layer stackup:

The following 4 layers stackup was used (JLC04161H-3313):

Layer	Material	Thickness (mil)	Thickness (mm)	
L1	Outer Copper Weight1oz	1.38	0.0350	← Signal
Prepreg	3313 RC57% 4.2mil	3.91	0.0994	
L2	Inner Copper Weight	0.60	0.0152	← GND
Core	1.3mm H/HOZ with copper	49.80	1.2650	
L3	Inner Copper Weight	0.60	0.0152	← GND
Prepreg	3313 RC57% 4.2mil	3.91	0.0994	
L4	Outer Copper Weight1oz	1.38	0.0350	← Signal

This is the cheapest 4-layer stackup available from JLCPCB.

This signal/GND scheme ensures proper EMC/EMI and signal integrity behavior.

Controlled impedance:

Two types of tracks need controlled impedance in this design:

- USB 2.0 differential pair.
- RF tracks, such as LTE and GPS.

USB:

The USB track width and spacing was calculated using JLCPCB official [impedance calculator](#) for 90 Ohms differential (recommended for USB 2.0):

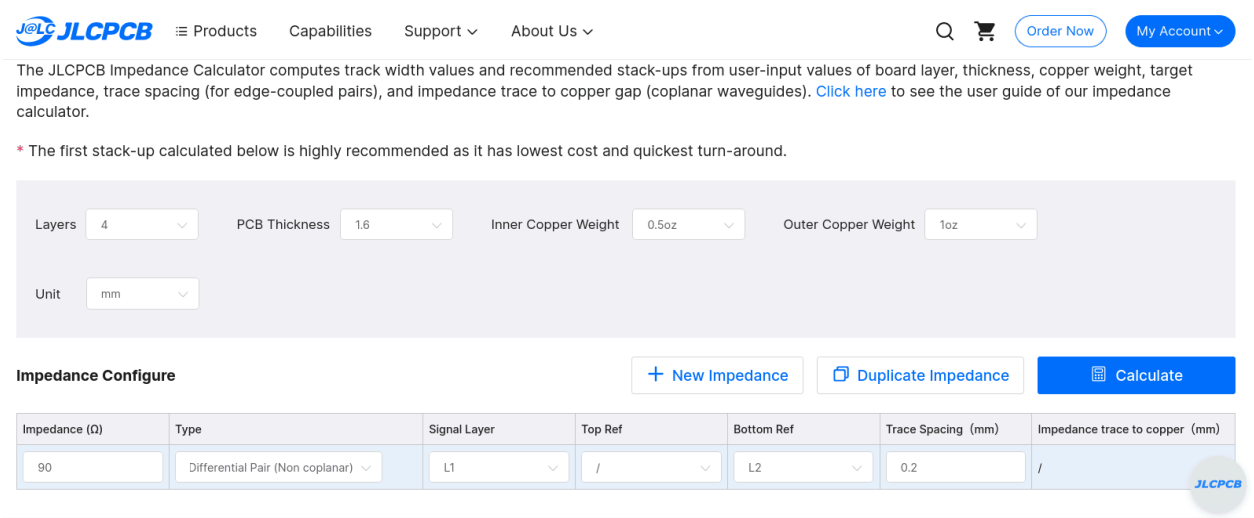

JLC04161H-3313(Finished thickness1.56mm±10%) | JLC04161H-3313A(Special/Finished thickness1.58mm±10%) | JLC04161H-7628(Standard/Finished th

Impedance (Ω)	Type	Signal Layer	Top Ref	Bottom Ref	Trace Width	Trace Spacing	Impedance trace to copper
90	Differential Pair (Non coplanar)	L1	/	L2	0.1575	0.2000	/

Layer	Material	Thickness (mil)	Thickness (mm)
L1	Outer Copper Weight1oz	1.38	0.0350
Prepreg	3313 RC57% 4.2mil	3.91	0.0994
L2	Inner Copper Weight	0.60	0.0152
Core	1.3mm H/HOZ with copper	49.80	1.2650
L3	Inner Copper Weight	0.60	0.0152
Prepreg	3313 RC57% 4.2mil	3.91	0.0994
L4	Outer Copper Weight1oz	1.38	0.0350

The result was

- Trace width: 0.15mm
- Trace spacing: 0.2mm

The next image shows the USB differential pair routed with the former properties:

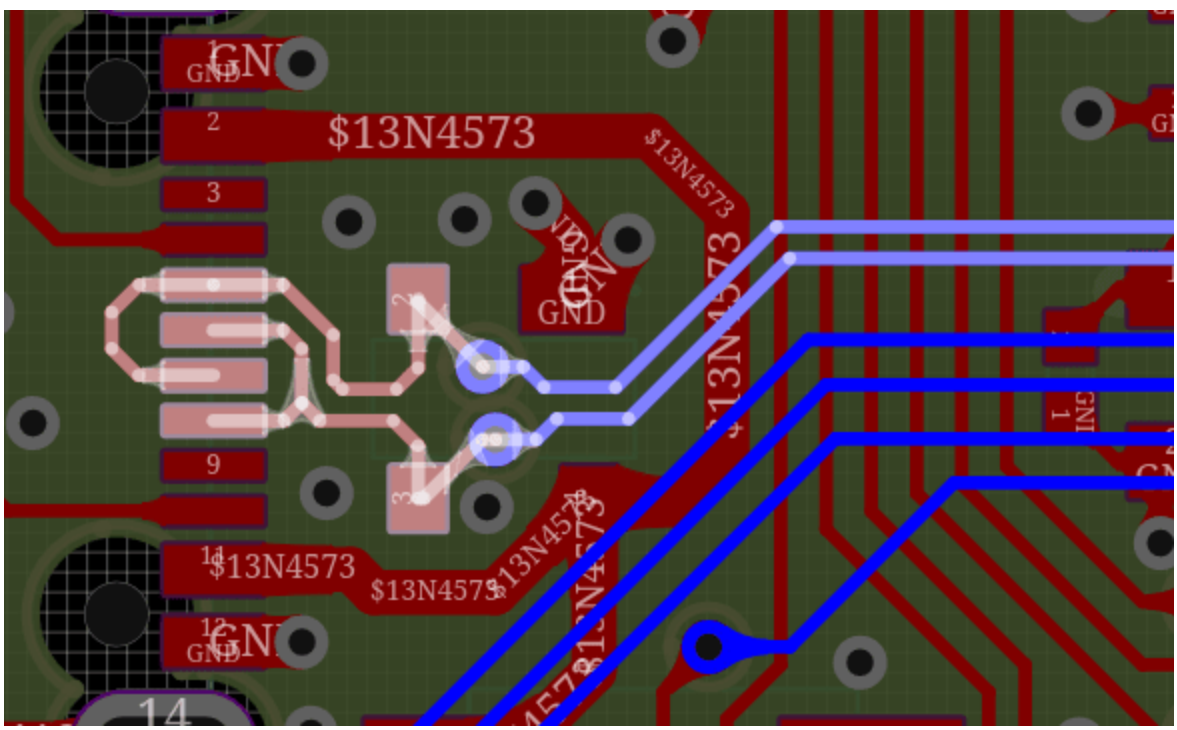

RF tracks:

The following points were taken into consideration when laying out the GPS and LTE

tracks:

- To increase track width (and then, accuracy), instead of using L2 as reference, L3 was used instead.
- Curved routing was used.
- The transmission line type chosen was "Single Ended Coplanar Microstrip"

The resulting track width was 0.65mm, shown below:

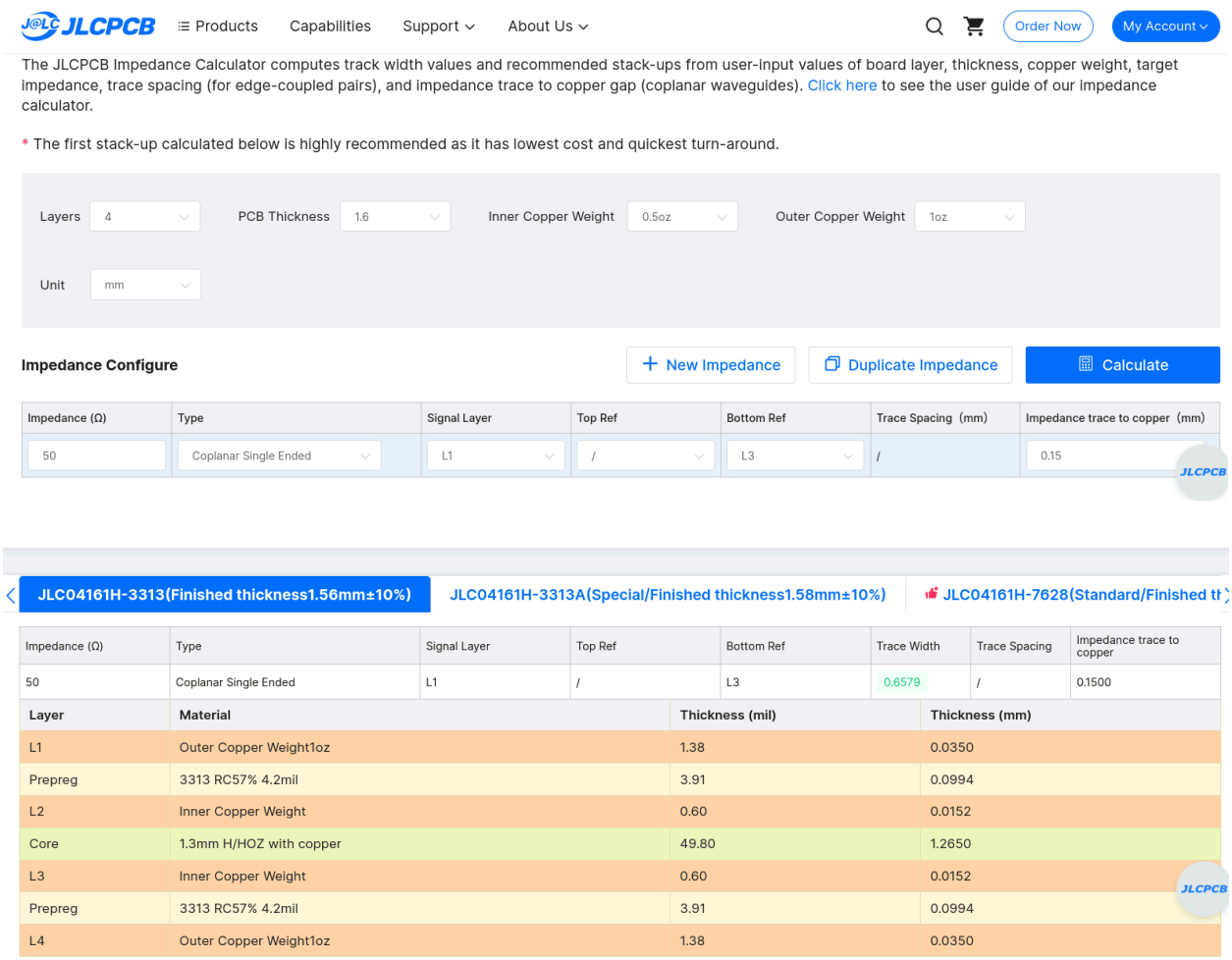

In the following pictures, the tracks routed are shown:

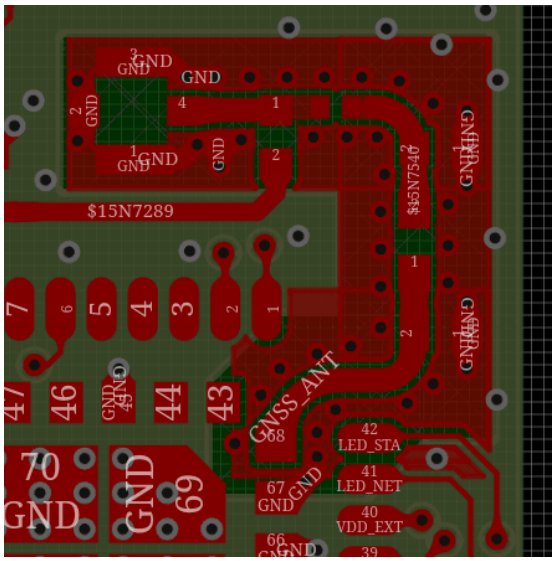
GND
GND
GND

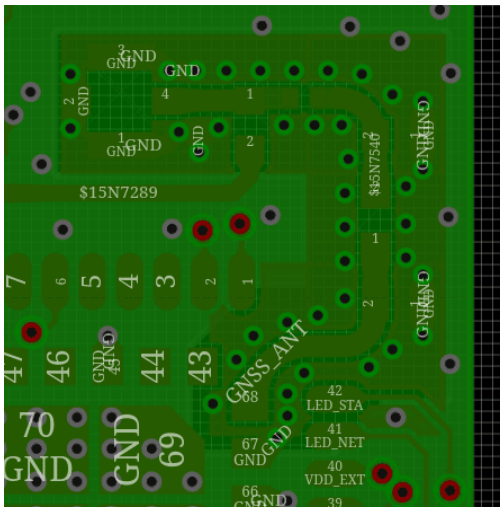

GPS track, in2 layer

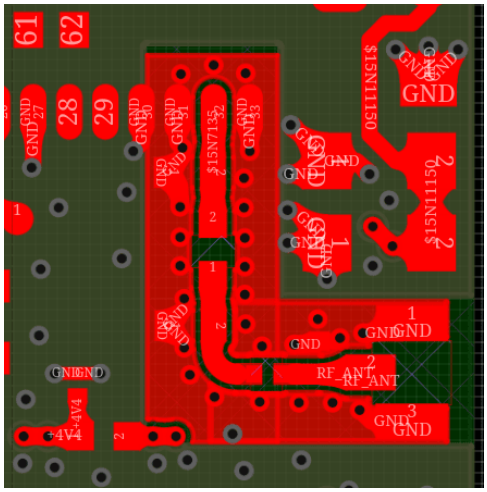

LTE track, top layer

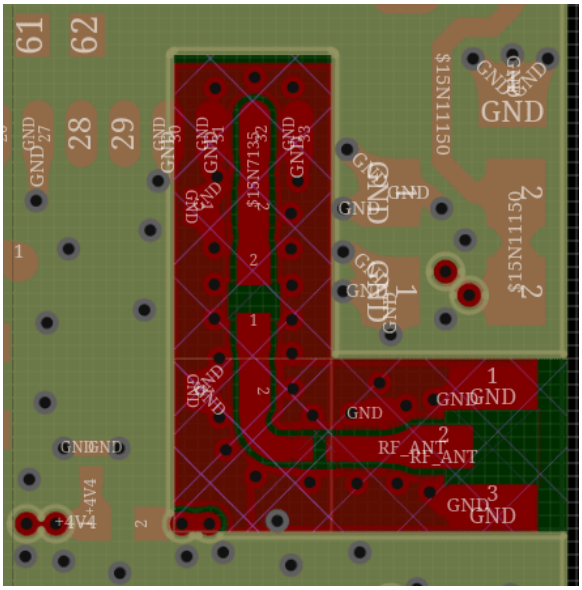

LTE track, in1 layer

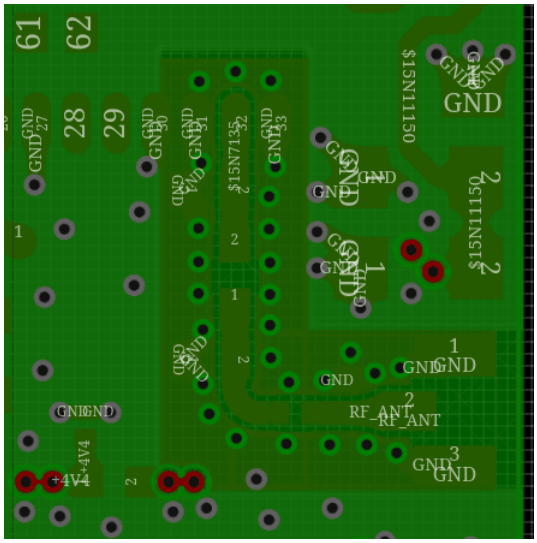

LTE track, in2 layer

PCB Manufacturing Information:

Summary of manufacturing files:

- Gerber files: gerber-OpenAmbient-V0_1-03-03-26.zip
- BOM: BOM-OpenAmbient-V0_1-03-03-26.csv

- Pick and Place: PnP-OpenAmbient-V0_1-03-03-26.csv

Manufacturing specifications:

- Layers: 4
- PCB thickness: 1.6mm.
- Surface finish: ENIG.
- Outer copper layer weight: 1 Oz.
- Inner copper layer weight: 0.5 Oz.
- Stackup: JLC04161H-3313
- Impedance control: Yes (+-10%).
- Min hole size: 0.3mm
- Min track width: 0.15mm
- Min copper clearance: 0.15mm