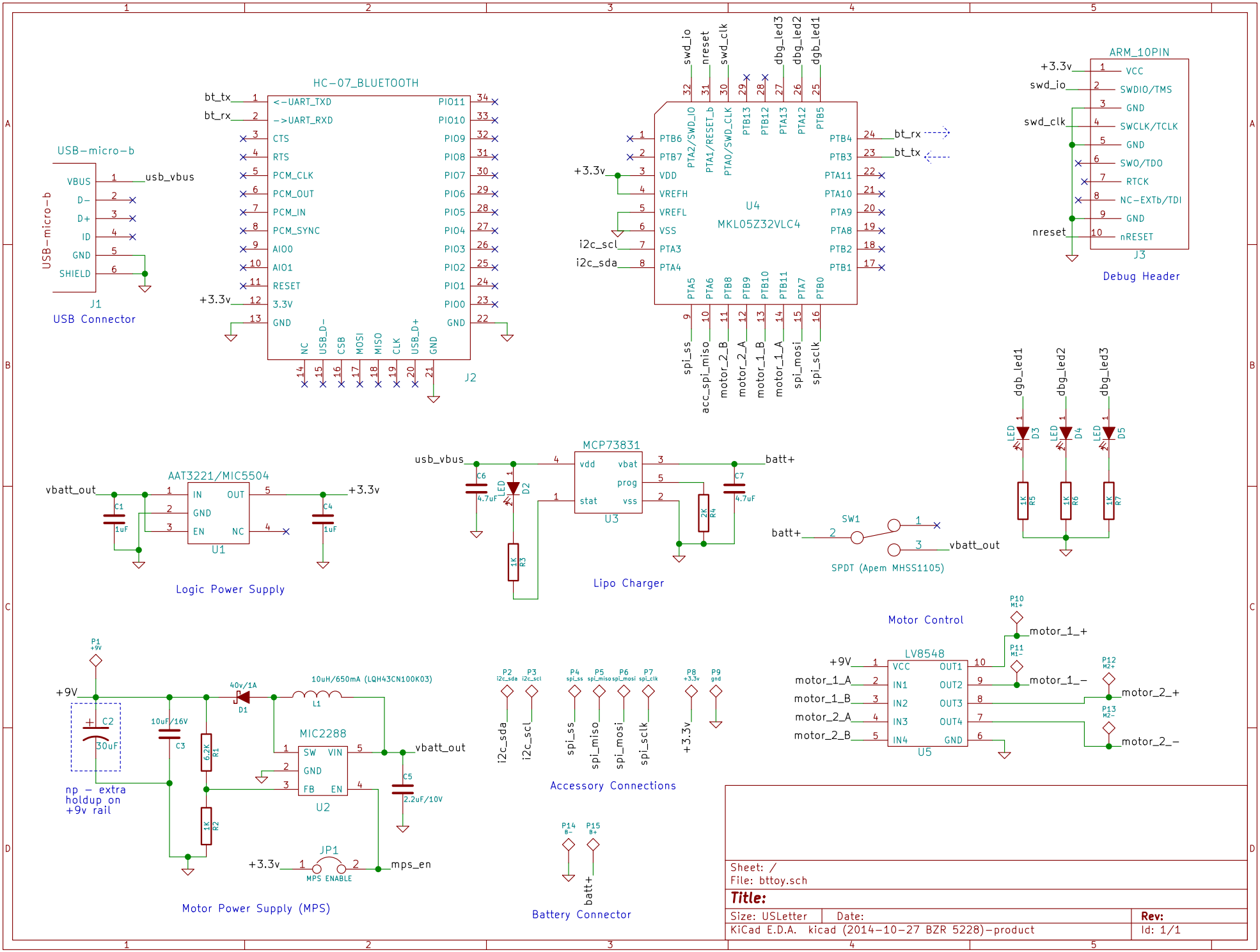

Sheet: /
File: bttoy.sch

Title:

Size: USLetter	Date:	Rev:
KiCad E.D.A. kicad (2014-10-27 BZR 5228)-product		Id: 1/1