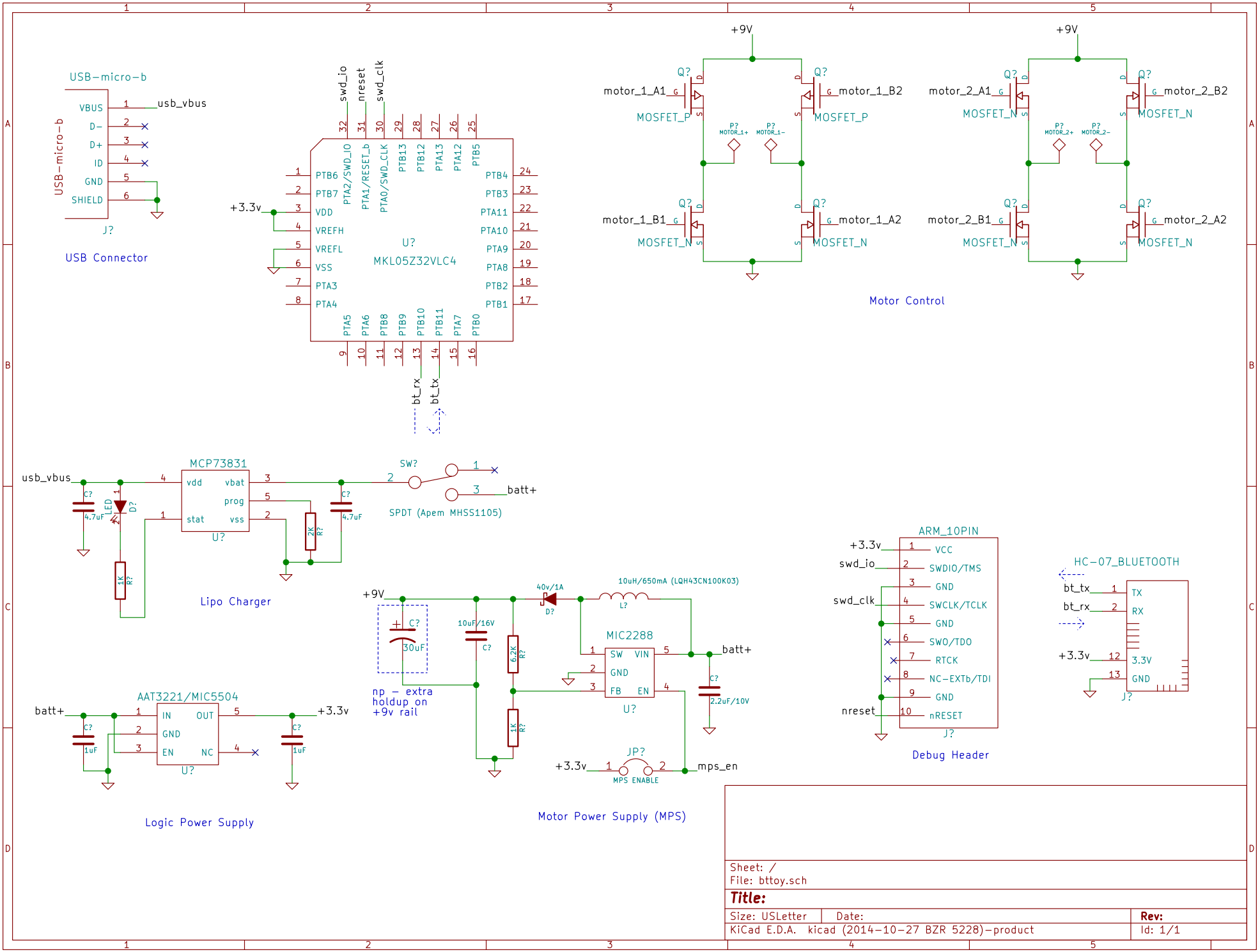
USB-micro-b
VBUS
D-
D+
ID
GND
SHIELD
usb_vbus
J?
USB Connector
swd_io
nreset
swd_clk
+3.3v
PTB6
PTB7
VDD
VREFH
VREFL
VSS
PTA3
PTA4
PTA2/SWD_IO
PTA1/RESET_b
PTA0/SWD_CLK
PTB13
PTB12
PTA13
PTA12
PTB5
PTB4
PTB3
PTA11
PTA10
PTA9
PTA8
PTB2
PTB1
PTA5
PTA6
PTB8
PTB9
PTB10
PTB11
PTA7
PTB0
U?
MKL05Z32VLC4
bt_rx
bt_tx
+9V
motor_1_A1
motor_1_B2
motor_1_B1
motor_1_A2
MOSFET_P
MOSFET_N
P? MOTOR_1+
P? MOTOR_1-
motor_2_A1
motor_2_B2
motor_2_B1
motor_2_A2
P? MOTOR_2+
P? MOTOR_2-
Motor Control
MCP73831
vdd
vbat
prog
stat
vss
U?
C? 4.7uF
LED
D?
1K R?
2K R?
SW?
batt+
SPDT (Apem MHSS1105)
Lipo Charger
AAT3221/MIC5504
IN
OUT
GND
EN
NC
C? 1uF
Logic Power Supply
C? 30uF
np - extra holdup on +9v rail
10uF/16V
40v/1A
D?
10uH/650mA (LQH43CN100K03)
L?
MIC2288
SW
VIN
GND
FB
EN
6.2K R?
1K R?
C? 2.2uF/10V
JP?
MPS ENABLE
mps_en
Motor Power Supply (MPS)
ARM_10PIN
VCC
SWDIO/TMS
GND
SWCLK/TCLK
SWO/TDO
RTCK
NC-EXTb/TDI
nRESET
Debug Header
HC-07_BLUETOOTH
TX
RX
3.3V
Sheet: /
File: bttoy.sch
Title:
Size: USLetter
Date:
Rev:
KiCad E.D.A. kicad (2014-10-27 BZR 5228)-product
Id: 1/1