EVERLIGHT

CATALOGUE 2011

OPTOELECTRONIC COMPONENTS

www.everlight.com

EVERLIGHT.

THE SOURCE OF LIGHT.

EVERLIGHT illuminates the way for many of the world's brightest companies. Acclaimed as a premiere global solution provider in the opto-semiconductor industry and held in high regard as a reliable partner for many of the world's leading electronics companies, EVERLIGHT incorporates versatility and creativity to provide customer driven value.

Since its foundation in 1983, EVERLIGHT has been an innovator in the production of LED for home appliances. Today EVERLIGHT brings decades of knowledge to a wide range of applications in the LED market including automotive, backlighting, solid state lighting, infrared products, mobile devices and signage.

From intelligent infrared sensors in mobile devices and backlit dashboards in automobiles to high-precision controls for industrial applications, EVERLIGHT improves the way we live. In addition, with applications for highly efficient indoor and outdoor lighting in offices, homes, landmarks and cities, EVERLIGHT's technology lights up the very spaces and places we enjoy everyday. In other words: EVERLIGHT makes the world brighter, more colorful and enhances quality of life.

For more information, please visit our website :

www.everlight.com

CONTENTS

	Alphanumeric Index		04
	Conditions of RoHS		12
	Application Notice		14
	Technical Data		15
Visible LED			
High Power LED			38
Low Power LED			44
Flash LED	High Power Flash LED	2016 Package	47
		3333 Package	48
	Low Power Flash LED	Triple Dice	49
		Four Dice	49
SMD LED	Subminiature LED Lamps (Leadframe)		50
	Surface Mount Chip LEDs (PCB)	Top View LED	52
		Top View 0402 (0.2T~0.5T)	53
		Top View 0603 (0.2T~0.8T)	54
		Top View 0805	59
		Top View 1206	61
		Top View Bi-Color	64
		Top View Full Color	68
		Side View (0.2T~1.0T)	70
		Side View Bi-Color	74
		Side View Full Color	75
		Reverse Mount	77
		Reverse Mount Bi-Color	79
		Reverse Mount Full Color	80
	Surface Mount PLCC LED (Reflector)	Top View LED	81
		Top View Bi-Color	82
		Top View White LED	83
		Top View PLCC2	84
		Top View PLCC3	88
		Top View PLCC4	90
		Side View LED	91
Super Flux LED	3 mm		93
	5 mm		94
	Flat		94
LED Lamps	2 mm Tower Type		95
	3 mm Round Type		96
	5 mm Round Type		101
	8 mm Round Type		107
	10 mm Round Type		107
	3 mm Cylindrical		108
	5 mm Cylindrical		108
	5 mm Square		108
	Rectangular		109
	3 mm Assembly LED		112
	5 mm Assembly LED		115
LED Digital Displays	Chip On Board Display	Single Digit Display	117
		Dual Digit Display	120
		Three Digit Display	123
		Four Digit Display	124
	SMD Display	Single Digit Display	126
		Dual Digit Display	128
		Three Digit Display	130
		Four Digit Display	132
	Dot Matrix Display		133
	Light Bar Display		134

Infrared LED, Sensors, Couplers

Infrared LED and Silicon Detector	Emitter	Lamp 3mm		138
		Lamp 5mm		139
		Piranha		142
		Side Look		143
		SMD		144
	Photo Diode	DIP		149
		Side Look		150
		SMD		151
	Photo Transistor	DIP		153
		Side Look		156
		SMD		158
Infrared Receiver Module	33KHz	IRM-8xxx Vo-GND-Vcc	Standard Burst	162
	36KHz	DIP-Vo-GND-Vcc	Standard Burst	165
			Short Burst	165
		DIP-Vo-Vcc-GND	Standard Burst	166
			Short Burst	166
		IRM-8xxx Vo-GND-Vcc	Standard Burst	167
	38KHz	DIP-Vo-GND-Vcc	Standard Burst	168
			Short Burst	168
		DIP-Vo-Vcc-GND	Standard Burst	169
			Short Burst	169
		SMD Top View	Standard Burst	170
		SMD Side View	Standard Burst	171
	40KHz	DIP-Vo-GND-Vcc	Standard Burst	171
	56KHz	DIP-Vo-GND-Vcc	Standard Burst	172
		DIP-Vo-Vcc-GND	Standard Burst	172
		IRM-8xxx Vo-GND-Vcc	Standard Burst	173
Optic-Fiber Device (Photo Link)	Receiver (PLR) Component			174
	Receiver (PLR) Module			176
	Transmitter (PLT) Component			180
	Transmitter (PLT) Module			182
Optical Sensor	Ambient Light Sensor	Analog		186
		Digital		190
	Proximity Sensor	Digital		190
	RGB Color Sensor	Single Color Sensor (Analog)		191
	Reflective Sensor			192
	Transmissive Sensor			196
Photo Coupler	Darlington Transistor	4Pin DIP-DC		201
		6Pin DIP-DC		201
		8Pin DIP-DC		202
	High Speed	8Pin SOP		202
		8Pin DIP		203
	Schmitt Trigger	6Pin DIP		204
	Transistor	4Pin DIP-AC		204
		4Pin DIP-DC		205
		4Pin High Isolation		205
		4Pin SOP-AC		206
		4Pin SOP-DC		206
		4Pin SSOP-DC		206
		4Pin/5Pin Long Creepage		207
		6Pin DIP-DC		208
		6Pin DIP-AC		208
		8Pin DIP-DC		209
		8Pin SOP-DC		209
	Triac	4Pin SOP		210
		6Pin DIP		211

ALPHANUMERIC INDEX

VISIBLE LED

10-01-C84-YSC-AAS2T2DH-AM	94
1003SURD/S530-A3	111
1003SYGD/S530-E2	111
1003UYD/S530-A3	111
1006SYGSURW/S530-A3	111
103SUBD/S400-A4	95
103SURD/S530-A3	95
103SYGD/S530-E2	95
11-21/BHC-AP2R1/2T	61
11-21/BHC-YR1S1/2T	61
11-21/G6C-BQ1R2B/2T	61
11-21/G6C-FN2P2B/2T	61
11-21/GHC-YT1U2/2T	61
11-21/R6C-AP1Q2LZ/2T	61
11-21/R6C-AR2S2B/2T	61
11-21/Y2C-CP2Q2B/2T	61
11-22/R6G6C-A01/2T	64
11-22/R6G6C-QSANP/2T	64
11-22/R6SGAC-A30/2T	64
12-11/BHC-ZL1M2QY/2C	70
12-21/BHC-AN1P2/2C	70
12-21/BHC-ZL1M2RY/2C	70
12-21/GHC-YR2S2/2C	70
12-21/R8C-AN1P2B/2D	70
12-21/T3D-AQ2S2M/2C	70
12-215/BHC-AN1P2/3C	71
12-215/BHC-XL1M2HY/3C	71
12-215/G6C-AL2M2B/3C	71
12-215/G6C-BP1Q2L/3C	71
12-215/R6C-AR1S1B/3C	71
12-215/T1D-ANPHY/3C	71
12-215/W1D-ANPHY/3C	71
12-215/Y2C-BR1S1L/3C	71
12-215/Y2C-CP1Q2B/3C	71
12-215/Y2C-CQ1R1B/3C	71
12-21C/BHC-AN1P2/2C	70
12-21C/BHC-YL1M2HY/2C	70
12-21C/T3D-CP1Q2B12Y/2C	70
12-21C/W1D-AR1S2/2C	70
12-22/BHR6C-A01/2C	74
12-22/G6R8C-A30/2C	74
12-22/R6GHC-A30/2C	74
12-22/Y2G6C-A30/2C	74
12-23C/R6GHBHC-A01/2C	75
12-23C/S2GHBHC-A01/2C	75
1224SYGC/S530-E2	98
1224USOC/S530-A3	98
1224UTC/S400-A6	98
1254-10SDRD/S530-A3	99
1254-10SURD/S530-A3	99
1254-10SURT/S530-A3	99
1254-10SYGD/S530-E2	99
1254-10SYGT/S530-E2	99
1254-10UYD/S530-A3	99
1259-7SDRSYGW/S530-A3	99
1259-7SURSYGW/S530-A3	99
1259-7UYSYGW/S530-A3	99
1383-2SDRD/S530-A3	105
1383-2SURD/S530-A3	105
1383SDRD/S530-A3	105
1383SURT/S530-A3	105
1383SYGD/S530-E2	105
1383SYGT/S530-E2	105
1383UYD/S530-A3	105
15-11/BHC-AN1P2/2T	61
15-11/BHC-ZL2N1QY/2T	61
15-11/W1D-APQHY/2T	61
15-13D/R6GHBHC-A01/2T	68
15-21/B6C-YR1S2B2/2T	62
15-21/B6C-ZQ1R1N/2T	62
15-21/BHC-AN1P2/2T	62
15-21/G6C-BK1L2VY/2T	62
15-21/G6C-FM1N2B/2T	62
15-21/G6C-FP1Q1L/2T	62
15-21/GHC-R2S2/2T	62
15-21/GHC-YR1S1/2T	62
15-21/R6C-AN1P2/2T	62
15-21/R6C-FQ1R1B/2T	62
15-21/S2C-AL2M2VY/2T	62
15-21/S2C-AQ2R2B/2T	62
15-21/S3C-AP1Q2/2T	62
15-21/T1D-CP1Q2TY/2T	62
15-21/T7D-JQ2S1PY/2T	62
15-21/W1D-APQHY/2T	62
15-21/Y2C-AN1P2/2T	62
15-21/Y2C-CP1Q2B/2T	62
15-215/G7C-BN1P2B/2T	63
15-215/R6C-AM2P1VY/2T	63
15-215/R6C-AP1Q1L/2T	63
15-21-G6C-A0N1P2B0E-2T-AM	62
15-21-R6C-B0Q1R2B0E-2T-AM	62
15-21-S2C-A0N2P2L0B-2T-AM	62
15-21-Y2C-A0P1Q2B0E-2T-AM	62
15-22/R6G6C-A32/2T	64
15-22/R6GHC-A01/2T	64
1533SYGD/S530-E2/O	111
16-213/BHC-AN1P2/3T	53
16-213/BHC-ZL1M2QY/3T	53
16-213/GHC-YR1S1/3T	53
16-213/R6C-A2225VZ/3T	53
16-213/T3D-AP1Q2QY/3T	53
16-213/T7D-AQ1R1QY/3T	53
16-216/T3D-AQ1R2TY/3T	53
16-219A/T2D-AR2T1QY/3T	53
16-916/T1D-AP1Q2QY/3T	71
17-11/BHC-AN1P2/3T	59
17-21/BHC-AN1P2/3T	59
17-21/BHC-AP1Q2/3T	59
17-21/BHC-XLMJY/3T	59
17-21/G6C-AN1P1B/3T	59
17-21/G6C-AP1Q1B/3T	59
17-21/G6C-FM1N2B/3T	59
17-21/G6C-FN1P2B/3T	59
17-21/G6C-FP1Q1B/3T	59
17-21/GHC-XS1T2M/3T	59
17-21/GHC-YR1S2/3T	59
17-21/GPC-AK0M1B/3T	59
17-21/GVC-AMPB/3T	59
17-21/R6C-AN2Q1B/3T	59
17-21/R6C-AP1Q2L/3T	59
17-21/R7C-AN2Q1B/3T	59
17-21/S2C-AN1P2B/3T	59
17-21/S2C-AP1Q2B/3T	59
17-21/T1D-ANPHY/3T	59
17-21/T1D-CP2R1TY/3T	59
17-21/T1D-KN2P2HY/3T	59
17-21/W1D-APQHY/3T	59
17-21/Y2C-AN1P2/3T	59
17-21/Y2C-CN1P2B/3T	59
17-21/Y2C-CP2Q2B/3T	59
17-215/B6C-YP2R2/3T	60
17-215/BHC-AN1P2/3T	60
17-215/BHC-BP2Q2M/3T	60
17-215/G6C-BM1N2L/3T	60
17-215/G6C-FN2P2B/3T	60
17-215/R6C-AQ1R2B/3T	60
17-215/S2C-AQ1R2B/3T	60
17-215/S2C-CP2R1B/3T	60
17-21-GPC-A0L1M2B0E-3T-AM	60
17-21-R7C-A0N1P2B0C-3T-AM	60
17-21-S3C-6FQ2R2L0E-3T-AM	60
17-21-Y2C-A0L1M2V0B-3T-AM	60
17-223/BHR7C-C30/3C	74
18-225/B6R6C-C01/3T	65
18-225/R6G6C-A01/3T	65
18-225/S2G6C-A01/3T	65
18-225A/R6GHW-B01/3T	65
19-117/BHC-YJ2K2TX/3T	54
19-117/BHC-ZL1M2RY/3T	54
19-117/T1D-AP2Q2QY/3T	54
19-118/BHC-ZL1M2QY/3T	54
19-123/Y2ST1D-C30/2T	65
19-137/R6GHBHC-A01/2T	68
19-21/B6C-AP2Q2M/3T	55
19-21/BHC-AP1Q2/3T	55
19-21/BHC-YL1M1RY/3T	55
19-21/BHC-ZQ1R2N/3T	55
19-21/G6C-AL1M2LY/3T	55
19-21/G6C-FM1N2B/3T	55
19-21/G6C-FP1Q1L/3T	55
19-21/GHC-YN1P2QY/3T	55
19-21/GPC-FL1M2B/3T	55
19-21/R6C-AL2N1VY/3T	55
19-21/R6C-FP1Q2L/3T	55
19-21/R7C-AK1L2BY/3T	55
19-21/R7C-AN2Q1B/3T	55
19-21/R8C-FN2Q1L/3T	55
19-21/S2C-AL2M2VY/3T	55
19-21/S2C-AQ1R2B/3T	55
19-21/T1D-ANPHY/3T	55
19-21/T1D-CPQTY/3T	55
19-21/W1D-ANPHY/3T	55
19-21/Y2C-AL1M2VY/3T	55
19-21/Y2C-CP1Q2B/3T	55
19-213 /Y2C-CQ1R2/3T	57
19-213/B7C-AQ2S1B2/3T	57
19-213/BHC-AN1P2/3T	57
19-213/G6C-AP1Q2/3T	57
19-213/G6C-BM1N2B/3T	57
19-213/G6C-FN2Q1L/3T	57

19-213/G6W-FN1P1B/3T	57
19-213/GHC-XS1T1N/3T	57
19-213/GHC-YP1Q2QY/3T	57
19-213/GHC-YR1S2/3T	57
19-213/R6C-AM2P1VY/3T	57
19-213/R6C-AN1P2/3T	57
19-213/R6C-AN2Q1B/3T	57
19-213/R6C-AP1Q2B/3T	57
19-213/R6C-AQ1R2B/3T	57
19-213/R8C-FN1P2/3T	57
19-213/S2C-AN1P2B/3T	57
19-213/S3C-AN2P2B/3T	57
19-213/T1D-ANPHY/3T	57
19-213/Y2C-AP1Q2B/3T	57
19-213/Y2C-CN1P2/3T	57
19-213/Y2C-CP1Q2L/3T	57
19-213/Y2C-CQ2R2L/3T	57
19-213A/T1D-CP2Q2HY/3T	56
19-217/B9C-ANQE/3T	56
19-217/BHC-AN1P2/3T	56
19-217/BHC-XK1L2B11X/3T	56
19-217/BHC-YL2M2TY/3T	56
19-217/G7C-AL1M2B/3T	56
19-217/GHC-YR1S2/3T	56
19-217/R6C-P1Q2/3T	56
19-217/S2C-AL1M2VY/3T	56
19-217/S3C-AL2N1VY/3T	56
19-217/T1D-ANPHY/3T	56
19-217/T1D-JP1Q2QY/3T	56
19-217/T7D-CS2T2B2/3T	56
19-217/W1D-CPQTY/3T	56
19-217/Y5C-AM1N1VY/3T	56
19-217/Y5C-APQB/3T	56
19-217/Y5C-AQ2R2/3T	56
19-218/BHC-ZL1M2QY/3T	58
19-218/GHC-YR1S2M/3T	58
19-218/R6C-AL1M2VY/3T	58
19-218/R6C-FM2P1B7Y/3T	58
19-218/T1D-CQ2R2TY/3T	58
19-219/T3D-AQ2R2TY/3T	58
19-219/T7D-AV1W1E/3T	58
19-219/Y5C-AM1N2VY/3T	58
19-22/G6R6C-A31/2T	66
19-22/R6BHC-B01/2T	66
19-22/R6G6C-A01/2T	66
19-22/R6GHC-C02/2T	66
19-22/Y2G6C-A14/2T	66
19-223/G6S2C-A01/2T	67
19-223/R6BHC-A05/2T	67
19-223/R6G6C-A01/2T	67
19-223/R7BHC-A30/2T	67
19-223/R7G6C-A01/2T	67
19-223/S2BHC-A01/2T	67
19-223/S2T1D-C30/2T	67
19-223/Y2G6C-A01/2T	67
19-226/R6BHC-B01/2T	66
19-226/R6G7C-B02/2T	66
19-226/R6GHC-A03/2T	66
19-237/R6GHBHC-A04/2T	68
19-237A/BHR6GHC-A01/2T	69
19-237B/R6GHBHC-C01/2T	69
19-337/R6GHBHC-A01/2T	69
204-10SDRD/S530-A3	96
204-10SUBC/S400-A4	96
204-10SUGC/S400-A5	96
204-10SURC/S400-A8	96
204-10SURC/S530-A3	96
204-10SURC/S530-A3-L	96
204-10SURD/S530-A3	96
204-10SURD/S530-A3-L	96
204-10SURT/S530-A3	96
204-10SYGC/S530-E2	96
204-10SYGD/S530-E3	96
204-10SYGT/S530-E2	96
204-10USOC/S400-A9	96
204-10UYC/S400-A9	96
204-10UYC/S530-A3	96
204-10UYC/S530-A3-L	96
204-10UYD/S530-A3	96
204-10UYD/S530-A3-L	96
204-10UYOC/S530-A3	96
204-10UYT/S530-A3	96
209SDRSYGW/S530-A3	97
209SURSYGC/S530-A3	97
209SURSYGW/S530-A3	97
209SURSYGW/S530-A3	97
209UYOSUGC/S530-A3	97
22-21/BHC-AN1P2/2C	72
22-21/GHC-YR1S2/2C	72
22-23/R6GHBHC-A01/2C	75
22-23C/R6GHBHW-C01/2C	76
23-21/G6C-AL2N1/2T	77
23-21/GHC-YR2T1/2A	77
23-21/R6C-AM1N2AY/2A	77
23-21/R8C-AN2Q1B/2T	77
23-215A/BHC-DN2P2E/5A	78
23-21B/BHC-AN1P2/2A	77
23-21B/BHC-ZL1M1Y/2A	77
23-21B/G6C-AM2P1/2A	77
23-21B/S2C-AN1P2/2A	77
23-21B/T1D-ANQHY/2A	77
23-21B/T1D-CP2Q2TY/2A	77
23-21B/W1D-ANQHY/2A	77
23-21C/T1D-CP2Q2TY/2A	77
23-22B/R7G6C-A30/2T	79
23-22B/S2BHC-C30/2A	79
23-22C/S2BHC-B30/2A	79
23-23B/R6GHBHC-A01/2A	80
24-21/BHC-AN1P2/2A	78
24-21/GHC-YR2T1/2A	78
25-21/BHC-APR/2T	78
25-21/GHC-YSU/2A	78
25-21/T1D-ANQHY/2A	78
25-21/W1D-APQHY/2A	78
264-7SDRC/S530-A3	97
264-7SDRD/S530-A3	97
264-7SUGC/C525	97
264-7SURC/S400-A8	97
264-7SURD/S530-A3	97
264-7SURT/S530-A3	97
264-7SYGC/S530-E3	97
264-7SYGD/S530-E2	97
264-7SYGT/S530-E2	97
264-7UYC/S400-A9	97
27-21/BHC-AN1P2/3C	72
27-21/BHC-AP1Q2/3C	72
27-21/GHC-YR1S2M/3C	72
27-21/R6C-AP1Q2B/3C	72
27-21/S2C-FP1Q1L/3C	72
27-21/T1D-ANPHY/3C	72
27-21/T1D-CQ1R2NW/3C	72
27-21/T3D-AP2Q2HY/3C	72
27-21/W1D-APQHY/3C	72
27-21/Y2C-CPQB/3D	72
28-21SDRC/S530-A3/TR8	50
28-21SURC/S530-A2/TR8	50
28-21UYC/S530-A3/TR8	50
30-01/B4C-AKNB	93
30-01/G4C-ARTB	93
30-01-B74-S3NC-C6T1U1DH-AM	93
30-01-B84-RFC-D4T1U1DH-AM	93
30-01-B84-YSC-A1T1U1DH-AM	93
31-01/B4C-AKNB	93
31-01/T4C-4PRB	93
31-01-B14-S3NC-C6T1U1DH-AM	93
313-2SYGC/S530-E2	101
313-2SYGD/S530-E2	101
313-2UYD/S530-A3	101
32-01/B4C-AJMB	94
32-01/G4C-AQSB	94
32-01/T4C-4PRB	94
323-2SURD/S530-A3	101
323-2SYGD/S530-E2	101
3294-15SUBC/S400-A6	100
3294-15SUGC/S400-A6	100
3294-15SURC/S400-A7	100
3294-15UBGC/S400-A6	100
33-01/B4C-AHKB	93
33-01/G4C- ARTB	93
33-01-C34-YYSC-A5T1U1CH-AM	93
33-01-C44-RRFC-D1T1U1CH-AM	93
333-2SDRC/S530-A4	102
333-2SDRD/S530-A3	102
333-2SDRT/S530-A3	102
333-2SUBC/C470/S400-A6	102
333-2SUBD/S400-A4	102
333-2SUBW/C470/S400-A4	102
333-2SUGC/C525	102
333-2SUGC/S400-A5	102
333-2SURC/S400-A8	102
333-2SURC/S530-A2	102
333-2SURD/S530-A3	102
333-2SURT/S530-A3	102
333-2SYGC/S530-E2	102
333-2SYGD/S530-E2	102
333-2SYGT/S530-E2	102
333-2SYGW/S530-E2	102
333-2UBC/C430	102
333-2UTC/S400-A6	102
333-2UYC/S400-A4	102

ALPHANUMERIC INDEX

VISIBLE LED

333-2UYC/S400-A7 102
333-2UYC/S530-A3 102
333-2UYC/S530-A6 102
333-2UYD/S530-A3 102
334-15/T1C1-1VXA 103
334-15/T1C1-4VXC 103
334-15/T1C1-7VXC 103
334-15/T1C3-7TVA 103
334-15/T1C5-4PRA 103
334-15/T2C1-1SUB 103
334-15/T2C1-1UWA 103
334-15/T2C1-1UWB 103
334-15/T2C1-2UWC 103
334-15/T2C1-4UWC 103
334-15/T2C1-4UWC/R10 103
334-15/T2C1-7UWC 103
334-15/T2C2-1TVB 103
334-15/T2C2-6TVB 103
334-15/T2C2-6TWB 103
334-15/T2C2-7TVA 103
334-15/T2C3-1RTB 103
334-15/T2C3-2RTC 103
334-15/T2C3-4RTB 103
334-15/T2C5-1MQB 103
334-15/X1C2-1UWA 103
334-15/X1C5-6QSA 103
334-15/X2C1-1UWB 103
334-15/X2C1-4UWA 103
336SURSYGW/S530-A3 101
336SYGSYGD/S530-E2 101
339-1SURSYGC/S530-A3 104
339-1SURSYGW/S530-A3 104
339-1UYSYGW/S530-A3 104
339-1UYUBW/S530-A4 104
35-01/B4C-AKNB 94
35-01/T4C-4PRB 94
363-2SURD/S530-A3 107
363-2SYGD/S530-E2 107
363SYGD/S530-E2 107
38-01-A74-YSC-A2T1U1DH-AM 93
38-01-A84-RAC-D4T1U1DH-AM 93
38-01-A84-S3NC-C1S2T2CH-AM 93
383-2SUBC/C470/S400-A6 104
383-2SURC/S400-A6 104
383-2SURC/S400-A8 104
383-2SURC/S530-A3 104
383-2SURC/S530-A6 104
383-2SYGC/S530-E2 104
383-2SYGD/S530-E2 104
383-2UBC/C470 104
383-2USOC/S530-A6 104
383-2UYC/S400-A6 104
383-2UYC/S530-A3 104
393-2SURD/S530-A3 107
393UYD/S530-A3 107
414-10UYD/S530-A3 108
4204-10SYGC/S530-E4 100
42-21/BHC-AUW/1T 52
42-21A/BHC-ZV1W2N/1T 52
42-21A/GHC-YX1Y2N/1T 52
423-2ASUGC/S400-A6-P/TR1(A) 108
423-2UYC/S530-A6 108
45-21/KK2C-S30308BACB41/2T 44
45-21/KK2C-S4040AC4CB41/2T 44
45-21/LK2C-B2832AC2CB2/2T 44
45-21/LK2C-B38452C4CB2/2T 44
45-21/LK2C-B45562C4CB2/2T 44
45-21/LK2C-B50634C6CB2/2T 44
45-21/LK2C-B56702C4CB2/2T 44
45-21/QK2C-B2832AC2CB2/2T 44
45-21/QK2C-B3845AC2CB2/2T 44
45-21/QK2C-B45562C4CB2/2T 44
45-21/QK2C-B50632C4CB2/2T 44
45-21/QK2C-B56702C4CB41/2T 44
45-21UMC/3235A54/TR8 81
48-213/BHC-ZM2P1QY/3C 73
48-213/R6C-AM1N2VY/3C 73
48-213/T2D-AQ2R2QY/3C 73
48-213/T3D-AP1Q2TY/3C 73
48-213/T7D-AQ1R2QY/3C 73
484-10SURT/S530-A3 98
484-10UTC/S400-A6 98
484-10UYT/S530-A3 98
494-10SURT/S530-A3 98
494-10SYGT/S530-E2 98
50-215BUMC/3437425/TR8 81
50-215UMC/3437555/TR8 91
513SURD/S530-A3 109
513SYGD/S530-E2 109
514SURD/S530-A3 109
514SYGD/S530-E2 109
514UYD/S530-A3 109
519-1SURSYGW/S530-A3 109
523-2SDRD/S530-A3 110
523-2SURD/S530-A3 110
523-2UYD/S530-A3 110
523SURD/S530-A3 110
523SYGD/S530-E2 110
523UYD/S530-A3 110
57-11UTC/S827-1/TR8 91
57-21/R6C-AP1Q2B/BF 91
57-21-B1C-A1J1K2A1C-BT8-AM 92
57-21-B5P-A9V1ABBHE-BT8-AM 92
57-21-GPSC-U8M1N2A5E-BT8-AM 92
57-21SYGC/S530-E3/TR8 91
57-21-Y2C-H5S1T1B0E-BT8-AM 92
573SURD/S530-A3 110
573SYGD/S530-E2 110
583SURD/S530-A3 108
583SYGD/S530-E2 108
583UYD/S530-A3 108
59-146UTD/TR8 49
594SUBC/C470/S400-A4 110
594SURD/S530-A3 110
594SYGD/S530-E2 110
594UYD/S530-A3 110
61-238/KK2C-S30306F4GB2/ET 46
61-238/KK2C-S40408F6GB2/ET 46
61-238/LK2C-B28322FAGB2/ET 46
61-238/LK2C-B45568F6GB2/ET 46
61-238/LK2C-B50638F6GB2/ET 46
61-238/LK2C-B50638F6GB2/ET 81
61-238/LK2C-B56706F4GB2/ET 46
61-238/QK2C-B28322FAGB2/ET 46
61-238/QK2C-B45562FAGB2/ET 46
61-238/QK2C-B50632FAGB2/ET 46
61-238/RSGBB7C-B02/ET 81
61-238UMC/S3085/TR8/LT 81
62-227B/KK2C-N3030N4P3S2Z6/2T 46
62-227B/KK2C-N4040N4P3S2Z6/2T 46
62-227B/LK2C-N3030N4P3S2Z6/2T 46
62-227B/LK2C-N4040N4P3S2Z6/2T 46
6324-15SUBC/S400-X10 105
6324-15SURC/S400-A9 105
65-11/BHC-AR1S2B2/2T 84
65-11/T2C-FV1W2E/2T 84
65-11UTC/S933/TR8 84
65-21/G6C-AN2Q1/3T 84
65-21/Y2C-CJ2L2X/3T 84
65-21/Y2SC-AR1S2B/2T 84
65-21/Y2SC-FR2S1B/2T 84
65-21-B1C-A1H2K1A1C-2T8-AM 85
65-21-B3T-A0S1T1A7E-2T8-AM 85
65-21-G6C-Y2P2R1B7E-2T8-AM 85
65-21-R7C-A6Q2S1B0E-2T8-AM 85
65-21-S2SC-B2S1T1B7E-2T8-AM 85
67-03/BHGHR6W-B11/2T 90
67-03/RSGHBHC-B06/1T 90
67-11/BHC-FQ2S1F/2T 85
67-11/GHC-AT2V1/2T 85
67-11/W1C-ES1T2N/2T 85
67-11/W1C-FV1W2F/2T 85
67-21/B3C-BN1Q2N/2T 87
67-21/B7C-AS2U1N/2T 87
67-21/BHC-FP1Q2F/2T 87
67-21/G4C-BQ1T2N/2T 87
67-21/G6C-FN2P2B/2T 87
67-21/GBC-YV2W2N/2T 87
67-21/GHC-AS2U1B17Z/2T 87
67-21/GHC-BV1/2T 87
67-21/KK2C-S3030AC2CB2/2T 45
67-21/KK2C-S4040AC2CB2/2T 45
67-21/LK2C-B28322C4CB2/2T 45
67-21/LK2C-B38454C6CB2/2T 45
67-21/LK2C-B45564C6CB2/2T 45
67-21/LK2C-B50634C6CB2/2T 45
67-21/LK2C-B56704C6CB2/2T 45
67-21/QK2C-B28322C4CB2/2T 45
67-21/QK2C-B38452C4CB2/2T 45
67-21/QK2C-B45562C4CB2/2T 45
67-21/QK2C-B50632C4CB2/2T 45
67-21/QK2C-B56702C4CB2/2T 45
67-21/R6C-AP2R1B/2T 87
67-21/R6C-FN2Q1BZ/2T 87
67-21/R6C-FR2T1B/2T 87
67-21/R6C-FS1U1B/2T 87
67-21/RSC-FT2V1B/2T 87
67-21/RSC-T1V1/2T 87
67-21/S2C-FQ2R2B/2T 87
67-21/S3C-AS1T1/2T 87

67-21/T2C-YV2W2B22/2A0 87
67-21/T2C-ZV1W2E/2T 87
67-21/T3C-EU1V2M/2A0 87
67-21/Y2C-AP1Q1B/2T 87
67-21/Y2C-AS1T1/2T 87
67-21/Y2C-BR2T1B/2T 87
67-21/YSC-FU1U2B/2T 87
67-21/YSC-FU1V2B/2T 87
67-21-B1C-R3K1M1C6C-2T8-AM 86
67-21-B3T-Q8R1S2M0E-2T8-AM 86
67-21-GHC-Z1T2U2A6C-2T8-AM 86
67-21-R7C-F3K1L1B6A-2T8-AM 86
67-21-S2C-B2K2L2B7A-2T8-AM 86
67-21SUBC/S400-X9/TR8 87
67-21SURC/S530-A7/TR8 87
67-21UBC/C430/TR8 87
67-21UYC/S530-A6/TR8 87
67-22/G3G3C-B45/2T 82
67-22/R6BHC-B07/2T 82
67-22/R6G6C-B09/2T 82
67-22/R6Y2C-B31/2T 82
67-22SURSYGC/S530-A2/TR8 82
67-22UYSYGC/S530-A5/TR8 82
67-23/R6GHBHC-B05/2T 83
67-23/T2C-EY2Z0/2T 83
67-235UWC/TR8 83
67-23SDRSYGUBC/TR8 83
67-31A/B7C-AT1U2MZ3/2T 88
67-31A/GHC-YV1W2EZ3/2T 88
67-31A/SAC-AW1X2B9Z5/2T 88
67-31E/RSC-AV1W2B9Z5/2T 88
67-31E-GPSC-U8P2R1B7G-2T8-AM 89
67-31E-S3SC-M1U2V2C1G-2T8-AM 89
67-31E-Y9NC-E9V1AAC1G-2T8-AM 89
67-31EZ-BLT-2AV2ABC2F-2T8-AM 89
69-23BUMD/TR8 49
7343-2SURC/S400-A9 105
7343-2SURD/S530-A3 105
7343-2SYGD/S530-E3 105
7343-2USRC/S1060 105
7343-2UYC/H2/S400-A9 105
7343-2UYC/S1060 105
7343-2UYC/S400-A9 105
7343-2UYC/S530-A3 105
7344-15SUBC/C470/S400-A6 106
7344-15SUGC/S400-A5 106
7344-15SUGC/S400-X6 106
7383/R2C3-AMQB/P 106
7383USRW/S1089-2 106
91-21SUBC/S400-A4/TR7 50
91-21SUGC/S400-A4/TR7 50
91-21SURC/S530-A6/TR7 50
91-21SYGC/S530-E4/TR7 50
91-21UBC/C430/TR7 50
91-21USRC/S530-A4/TR7 50
93-22SURSYGC/S530-A3/TR8 82
94-22SUBC/S400-A4/S2 92
95-21SDRC/S530-A3/TR10 51
95-21SUBC/S400-A5/TR10 51
95-21SUGC/S400-A4/TR7 51
95-21SYGC/S530-E2/TR7 51
95-21USRD/S357/TR7 51
95-21UYC/S530-A5/TR7 51
A1394B/3SYG/S530-E2 113
A1479-1B/SURSYGW/S530-A3 115
A1844B/4SYG/S530-E2 114
A203B/SUR/S530-A3 115
A203B/SYG/S530-E2 115
A203B/UY/S530-A3 115
A214B/SUR/S530-A3 112
A214B/SYG/S530-E2 112
A214B/UY/S530-A3 112
A253B/SUR/S530-A3 116
A253B/SYG/S530-E2 116
A264B/SUB/S400-A4 112
A264B/SUR/S530-A3 112
A264B/SYG/S530-E2 112
A264B/UY/S530-A3 112
A274B/SYG/S530-E2 112
A2774B/SYG/S530-E2 114
A2784B/2SYGSDRW/S530-A3 114
A694B/2SUR/S530-A3 113
A694B/2SYG/S530-E2 113
A694B/2UY/S530-A3 113
A694B/SURSYG/S530-A3 113
A694B/SYGUY/S530-A3 113
A93B/SUR/S530-A3 116
B1001SDRWB/S530-A3 134
B1001SURWB/S530-A3 134
B1001SYGWA/S530-E2 134
B1001USOWA/S530-A4 134
B1010SURD/S530-A3 134
B1010SYGD/S530-E2 134
D305SURWA/S530-A3 120
D306SURWA/S530-A3 120
D425SURWA/S530-A3 120
D425SYGWA/S530-E2 120
D425USOWA/S530-A4 120
D426SURWB/S530-A3 121
D426SYGWA/S530-E2 121
D426USOWA/S530-A3 121
D426UYOWB/S530-A3 121
D511SURWB/S530-A3 121
D512SURWB/S530-A3 121
D512UBWA/C470 121
D515SURWA/S530-A3 122
D525SURWA/S530-A3 122
D525SYGWA/S530-E2 122
D525USOWA/S530-A3 122
D526SURWA/S530-A3 122
EHP-69/GT01C-P01/TR 48
EHP-A09K-BRTT-5670HDBEBD9K-1T8-AM 43
EHP-A09K-S5TC-S3000CADAE1K-1T8-AM 43
EHP-A09K-Y8TC-E9000BBDAE1K-1T8-AM 43
EHP-C04/NT01A-P01/TR 47
EHP-C04/NT01H-P01/TR 47
ELCH06/BJ4J6Z10-N0 48
ELSH-E61B1-0LPNM-CB7B8 40
ELSH-E71B1-0LPNM-CB7B8 40
ELSH-E81B3-0LPNM-DB6B8 40
ELSH-E91B3-0LPNM-DB6B8 40
ELSH-F31Y1-0LPNM-AA3A5 40
ELSH-F31Y1-0LPNM-AA4A6 40
ELSH-F41O1-0LPNM-AR3R4 40
ELSH-F41R1-0LPNM-AR5R6 40
ELSH-F41Y1-0LPNM-AA3A5 40
ELSH-F41Y1-0LPNM-AA4A6 40
ELSH-F51O1-0LPNM-AR3R4 40
ELSH-F51R1-0LPNM-AR5R6 40
ELSH-F61M1-0CPHS-C2700 39
ELSH-F61M1-0LPGS-C2700 39
ELSH-F61M1-0LPGS-C3000 39
ELSH-F61O1-0LPNM-AR3R4 40
ELSH-F61R1-0LPNM-AR5R6 40
ELSH-F71G1-0LPNM-CG1G2 40
ELSH-F71G1-0LPNM-CG2G3 40
ELSH-F71M1-0CPGS-C2700 39
ELSH-F71M1-0CPHS-C3000 39
ELSH-F71M1-0CPHS-C3500 39
ELSH-F71M1-0LPGS-C3000 39
ELSH-F71N1-0LPGS-C4000 39
ELSH-F81C1-0LPGS-C5000 39
ELSH-F81C1-0LPGS-C5700 39
ELSH-F81C1-0LPGS-C6500 39
ELSH-F81M1-0CPGS-C3000 39
ELSH-F81M1-0CPGS-C3500 39
ELSH-F81M1-0VPHS-C2700 39
ELSH-F81M1-0VPHS-C3000 39
ELSH-F81N1-0LPGS-C4000 39
ELSH-F81N1-0LPGS-C4500 39
ELSH-F81N1-0VPHS-C4000 39
ELSH-F81R3-0LPNM-BR4R6 40
ELSH-F81Y3-0LPNM-BA3A5 40
ELSH-F91C1-0CPGS-C5000 39
ELSH-F91C1-0LPGS-C5700 39
ELSH-F91C1-0LPGS-C6500 39
ELSH-F91G3-0LPNM-DG1G3 40
ELSH-F91M1-0VPGS-C2700 39
ELSH-F91M1-0VPGS-C3000 39
ELSH-F91M1-0VPGS-C3500 39
ELSH-F91N1-0CPGS-C4000 39
ELSH-F91N1-0CPGS-C4500 39
ELSH-F91R3-0LPNM-BR4R6 40
ELSH-J11C1-0CPGS-C5700 39
ELSH-J11C1-0CPGS-C6500 39
ELSH-J11C1-0VPGS-C5000 39
ELSH-J11G3-0LPNM-DG1G3 40
ELSH-J11N1-0VPGS-C4000 39
ELSH-J11N1-0VPGS-C4500 39
ELSH-J21C1-0VPGS-C5700 39
ELSH-J21C1-0VPGS-C6500 39
ELSH-J21M3-0CPHS-D2700 40
ELSH-J21M3-0CPHS-D3000 40
ELSH-J21M3-0LPGS-D2700 40
ELSH-J21M3-0LPGS-D3000 40
ELSH-J21M3-0LPGS-D3500 40
ELSH-J31M3-0CPGS-D2700 40
ELSH-J31M3-0CPGS-D3000 40
ELSH-J31M3-0CPGS-D3500 40
ELSH-J31N3-0LPGS-D4000 40

ALPHANUMERIC INDEX

VISIBLE LED

ELSH-J41N3-0CPGS-D4000	40
ELSH-J41N3-0LPGS-D4500	40
ELSH-J51C3-0LPGS-D5000	40
ELSH-J51N3-0CPGS-D4500	40
ELSH-J61C3-0CPGS-D5000	40
ELSH-J61C3-0LPGS-D5700	40
ELSH-J61C3-0LPGS-D6500	40
ELSH-J71C3-0CPGS-D5700	40
ELSH-J71C3-0CPGS-D6500	40
ELSH-Q61F1-0LPNM-JF3F8	40
ELSH-Q91E1-0LPNM-JD3D8	40
ELSH-Q91L1-0LPNM-CB5B6	40
ELSW-E61B1-0LPNM-CB7B8	42
ELSW-E71B1-0LPNM-CB7B8	42
ELSW-E81B3-0LPNM-DB6B8	42
ELSW-E91B3-0LPNM-DB6B8	42
ELSW-F41Y1-0LPNM-AA3A5	42
ELSW-F51O1-0LPNM-AR3R4	42
ELSW-F51R1-0LPNM-AR5R6	42
ELSW-F61M1-0CPHS-C2700	41
ELSW-F61M1-0LPGS-C2700	41
ELSW-F61M1-0LPGS-C3000	41
ELSW-F61O1-0LPNM-AR3R4	42
ELSW-F61R1-0LPNM-AR5R6	42
ELSW-F71G1-0LPNM-CG1G2	42
ELSW-F71G1-0LPNM-CG2G	42
ELSW-F71M1-0CPGS-C2700	41
ELSW-F71M1-0CPHS-C3000	41
ELSW-F71M1-0CPHS-C3500	41
ELSW-F71M1-0LPGS-C3000	41
ELSW-F71N1-0LPGS-C4000	41
ELSW-F81C1-0LPGS-C5700	41
ELSW-F81C1-0LPGS-C6500	41
ELSW-F81M1-0CPGS-C3000	41
ELSW-F81M1-0CPGS-C3500	41
ELSW-F81M1-0VPHS-C2700	41
ELSW-F81M1-0VPHS-C3000	41
ELSW-F81N1-0LPGS-C4000	41
ELSW-F81N1-0VPHS-C4000	41
ELSW-F81R3-0LPNM-BR4R6	42
ELSW-F81Y3-0LPNM-BA3A5	42
ELSW-F91C1-0CPGS-C5000	41
ELSW-F91C1-0LPGS-C5700	41
ELSW-F91C1-0LPGS-C6500	41
ELSW-F91G3-0LPNM-DG1G3	42
ELSW-F91M1-0VPGS-C2700	41
ELSW-F91M1-0VPGS-C3000	41
ELSW-F91M1-0VPGS-C3500	41
ELSW-F91N1-0CPGS-C4000	41
ELSW-F91N1-0CPGS-C4500	41
ELSW-F91R3-0LPNM-BR4R6	42
ELSW-J11C1-0CPGS-C5700	41
ELSW-J11C1-0CPGS-C6500	41
ELSW-J11C1-0VPGS-C5000	41
ELSW-J11G3-0LPNM-DG1G3	42
ELSW-J11N1-0VPGS-C4000	41
ELSW-J11N1-0VPGS-C4500	41
ELSW-J21C1-0VPGS-C5700	41
ELSW-J21C1-0VPGS-C6500	41
ELSW-J21M3-0CPHS-D2700	42
ELSW-J21M3-0CPHS-D3000	42
ELSW-J21M3-0LPGS-D2700	42
ELSW-J21M3-0LPGS-D3000	42
ELSW-J21M3-0LPGS-D3500	42
ELSW-J31M3-0CPGS-D2700	42
ELSW-J31M3-0CPGS-D3000	42
ELSW-J31M3-0CPGS-D3500	42
ELSW-J31N3-0LPGS-D4000	42
ELSW-J41N3-0CPGS-D4000	42
ELSW-J41N3-0LPGS-D4500	42
ELSW-J51C3-0LPGS-D5000	42
ELSW-J51N3-0CPGS-D4500	42
ELSW-J61C3-0CPGS-D5000	42
ELSW-J61C3-0LPGS-D5700	42
ELSW-J61C3-0LPGS-D6500	42
ELSW-J71C3-0CPGS-D5700	42
ELSW-J71C3-0CPGS-D6500	42
ELYI-K42M5-0LPGS-P3000	43
ELYI-K72C5-0LPGS-P5700	43
ELYI-K72C5-0LPGS-P6500	43
F415SURWA/S530-A3	124
F416SURWA/S530-A3/S685	125
F416SYGWA/S530-E3	125
F511SURWA/S530-A3	125
F511SYGWA/S530-E2	125
F512SURWA/S530-A3	125
F512SYGWA/S530-E2	125
M2881SURWA/S530-A3	133
M2881SYGWA/S530-E2	133
M2881UYWA/S530-A3	133
M2882SYGWA/S530-E2	133
S1006SURWA/S530-A3	118
S2325SURWA/S530-A3	118
S2326SURWA/S530-A3	118
S2326SYGWA/S530-E2	118
S2326UBWA/C470	118
S2326USOWA/S530-A4	118
S315SURWA/S530-A3	117
S315SYGWA/S530-E2	117
S321SURWA/S530-A3	117
S321SYGWA/S530-E2	117
S321USOWA/S530-A4	117
S322SURWA/S530-A3	117
S322SYGWA/S530-E2	117
S322UBWA/C470	117
S322USOWA/S530-A4	117
S4005SYGWA/S530-E2	119
S4005USOWA/S530-A3	119
S4006SURWA/S530-A3	119
S4006USOWA/S530-A4	119
S506SYGWA/S530-E2	127
SD405SURWA/S530-A3/S290	128
SD406SURWA/S530-A4/S290	128
SD406SYGWA/S530-E2/S290	128
SD506SURWA/S530-A4/S290	129
SD511SYGWA/S530-E2/S290	129
SD512SYGWA/S530-E2/S290	129
SF405SURWA/S530-A3/S290	132
SF405SYGWA/S530-E2/S290	132
SF511SURWA/S530-A3/S290	132
SF512SURWA/S530-A3/S290	132
SF512SYGWA/S530-E2/S290	132
SS205SURWA/S530-A3/S290	126
SS205SYGWA/S530-E2/S290	126
SS205UYOWA/S530-A3/S290	126
SS205UYWA/S530-A3/S290	126
SS206SURWA/S530-A3/S290	126
SS206UYWA/S530-A3/S290	126
SS405SURWB/S530-A3/S290	126
SS406SURWA/S530-A3/S290	127
SS511SURWA/S530-A3/S290	127
SS511SYGWA/S530-E2/S290	127
SS512SURWA/S530-A3/S290	128
SS512UBWA/C470/S290	128
ST405SURWA/S530-A3/S290	130
ST406SURWA/S530-A3/S290	130
ST505SYGWA/S530-E2/S290	130
ST511SYGWA/S530-E2/S290	131
ST512SURWA/S530-A3/S290	131
ST512SYGWA/S530-E2/S290	131
T315SYGWA/S530-E2	123
T316SURWA/S530-A3	123
T316SYGWA/S530-E2	123
T511SURWA/S530-A3	123
T511SYGWA/S530-E2	123
T511UYOWA/S530-A3	123
T512SURWA/S530-A3	124
T512SYGWA/S530-E2	124
T512UYOWA/S530-A3	124

INFRARED LED, SENSORS, COUPLERS

4N25	208
4N26	208
4N27	208
4N28	208
4N29	201
4N30	201
4N31	201
4N32	201
4N33	201
4N35	208
4N36	208
4N37	208
4N38	208
6N135	203
6N136	203
6N137	203
6N138	203
6N139	203
ALS-PD70-01C/TR7	186
ALS-PDIC144-6B	188
ALS-PDIC144-6C/L378	188
ALS-PDIC15-21B/TR8	186
ALS-PDIC15-21C/L230/TR8	186
ALS-PDIC17-55C/TR8	187
ALS-PDIC17-77B/TR8	187
ALS-PDIC17-77C/TR8	187
ALS-PDIC17-79NB/TR8	190
ALS-PDIC243-3C	188
ALS-PT17-51C/L177/TR8	188
ALS-PT19-315C/L177/TR8	189
ALS-PT204-6C/L177	189
ALS-PT243-3C/L177	189
APS-12D-1-02/TR8	190
CLS15-22C/L213B/TR8	191
CLS15-22C/L213G/TR8	191
CLS15-22C/L213R/TR8	191
CNY17-1	208
CNY17-2	208
CNY17-3	208
CNY17-4	208
CNY17F-1	208
CNY17F-2	208
CNY17F-3	208
CNY17F-4	208
CNY64	205
CNY65	205
EL0452	202
EL0500	202
EL0501	202
EL0600	202
EL0601	202
EL1010-G	207
EL1012-G	207
EL1013-G	207
EL1014-G	207
EL1017-G	207
EL1018-G	207
EL1019-G	207
EL1110-G	207
EL1112-G	207
EL1113-G	207
EL1114-G	207
EL1116-G	207
EL1117-G	207
EL1118-G	207
EL1119-G	207
EL205	209
EL206	209
EL207	209
EL208	209
EL211	209
EL212	209
EL213	209
EL215	209
EL216	209
EL217	209
EL3010	211
EL3011	211
EL3012	211
EL3021	211
EL3022	211
EL3023	211
EL3031	211
EL3032	211
EL3033	211
EL3041	211
EL3042	211
EL3043	211
EL3051	211
EL3052	211
EL3053	211
EL3061	211
EL3062	211
EL3063	211
EL3081	211
EL3082	211
EL3083	211
EL354	206
EL357N-G	206
EL3H7-G	206
EL4502	203
EL814	204
EL815	201
EL816	205
EL817	205
EL817-G	205
EL825	202
EL827	209
ELD205	209
ELD206	209
ELD207	209
ELD211	209
ELD213	209
ELD217	209
ELM3022	210
ELM3023	210
ELM3024	210
ELM3042	210
ELM3043	210
ELM3044	210
ELM3052	210
ELM3053	210
ELM3054	210
ELM3062	210
ELM3063	210
ELM3064	210
ELM3082	210
ELM3083	210
ELM3084	210
H11A1	208
H11A2	208
H11A3	208
H11A4	208
H11A5	208
H11AA1	208
H11AA2	208
H11AA3	208
H11AA4	208
H11B1	201
H11B2	201
H11B255	201
H11B3	201
H11L1	204
HIR11-21C/L11/TR8	144
HIR19-21C/L11/TR8	145
HIR204	138
HIR204/H0	138
HIR204C	138
HIR204C/H0	138
HIR234C	138
HIR30-01C/S16	142
HIR323C	139
HIR323C/H0	139
HIR333/H0	139
HIR333C/H0	139
HIR36-01C/S32	142
HIR38-01C	142
HIR67-21C/L11/TR8	147
HIR7373C	140
HIR7393C	140
HIR83-01B/TR8	147
HIR8323/C16	141
HIR89-01C/1R	148
HIR928-6C-F	143
IR11-21C/TR8	144
IR12-21C/TR8	144
IR15-21C/TR8	144
IR17-21C/TR8	145
IR19-21C/TR8	145
IR19-315C/TR8	145
IR204/H16/L10	138
IR204/H60	138
IR204-A	138
IR204C/H16/L10	138
IR204C-A	138
IR25-21C/TR8	146
IR26-21C/L110/TR8	146
IR26-51C/L110/TR8	146
IR323	139
IR323/H0-A	139

ALPHANUMERIC INDEX

INFRARED LED, SENSORS, COUPLERS

IR333/H0	139
IR333/H0/L10	139
IR333-A	139
IR333C	139
IR333C/H0/L10	139
IR333C/H2	139
IR383	139
IR42-21C/TR8	147
IR533C	140
IR67-21C/TR8	147
IR7373C	140
IR7393C	140
IR8353-14C	141
IR908-7C-F	143
IR91-21C	148
IR91-21C/TR10	148
IR91-21C/TR7	148
IR928-6C-F	143
IR95-21C/TR7	148
IR958-8C	143
IR958-8P	143
IRM-2638T	168
IRM-2640T	171
IRM-2656T	172
IRM-3636M	165
IRM-3636M3	165
IRM-3636T	165
IRM-3638M	168
IRM-3638M2	168
IRM-3638M3	168
IRM-3640M2	171
IRM-3640T	171
IRM-3656M3	172
IRM-3656T	172
IRM-3736M	166
IRM-3736M3	166
IRM-3738M	169
IRM-3738T	169
IRM-3756M3	172
IRM-8601K-1	162
IRM-8602K-1	162
IRM-8602K-5	173
IRM-8608K-1	163
IRM-8751K-1	163
IRM-8751K-2	167
IRM-8752K-1	164
IRM-8752K-2	167
IRM-8752K-5	173
IRM-8753K-1	164
IRM-8753K-2	167
IRM-8755K-1	164
IRM-8755K-2	167
IRM-H238T/TR2	170
IRM-H638T/TR2	170
IRM-V538T/TR1	171
ITR20001/T	194
ITR20002	194
ITR20004	194
ITR20005-F	200
ITR20402	200
ITR20403	200
ITR20501	195
ITR20510/TR8	195
ITR20904	195
ITR8010	196
ITR8102	196
ITR8104	196
ITR8105	197
ITR8307	192
ITR8307	192
ITR8307/F43	192
ITR8307/L24	192
ITR8307/L24	192
ITR8307/L24/F43	192
ITR8402-F-A	197
ITR9606-F	197
ITR9608-F	198
ITR9702-F	198
ITR9707	198
ITR9803	199
ITR9809-F/T	199
ITR9813	199
ITR9904	193
ITR9908	193
ITR9909	193
MCT2E	208
PD15-21B/TR8	151
PD15-22B/TR8	151
PD204-6B	149
PD204-6C/L3	149
PD333-3B/H0/L2	149
PD333-3C/H0/L2	149
PD42-21B/TR8	151
PD42-21C/TR8	151
PD438B	150
PD438B/L1	150
PD438B/S46	150
PD438C	150
PD438C/S46	150
PD638B	150
PD70-01B/TR10	152
PD70-01B/TR7	152
PD70-01C/TR10	152
PD70-01C/TR7	152
PD95-21B/TR10	152
PLR135	174
PLR135/T	176
PLR135/T1	176
PLR135/T10	179
PLR135/T2	176
PLR135/T5A	177
PLR135/T5P	177
PLR135/T6	177
PLR135/T7	178
PLR135/T8	178
PLR135/T9	179
PLR137	174
PLR155	174
PLR233	175
PLR253	175
PLT132	180
PLT133	180
PLT133/T	182
PLT133/T1	182
PLT133/T10W	185
PLT133/T2	182
PLT133/T5A	183
PLT133/T5P	183
PLT133/T6	183
PLT133/T6A	184
PLT133/T7	184
PLT133/T8	184
PLT133/T9	185
PLT137	181
PLT232/L5	181
PT11-21C/L41/TR8	158
PT12-21B/TR8	158
PT12-21C/TR8	158
PT1504-6B	155
PT15-21B/TR8	158
PT15-21C/TR8	158
PT17-21B/L41/TR8	159
PT17-21C/L41/TR8	159
PT19-21B/L41/TR8	159
PT19-21C/L41/TR8	159
PT204-6B	153
PT204-6C	153
PT2559B/L2/H2-F	157
PT2559B/L2-F	157
PT2559B-F	157
PT26-21B/TR8	159
PT26-21C/TR8	159
PT26-51B/TR8	160
PT333-3B	154
PT333-3C	153
PT334-6B	154
PT334-6C	154
PT42-21B/TR8	160
PT534-6B	155
PT5529B/L2/H2-F	157
PT5529B/L2-F	157
PT67-21B/C14/TR8	160
PT67-21C/L41/TR8	161
PT908-7B-F	156
PT908-7C-F	156
PT91-21B	161
PT91-21B/TR10	161
PT91-21B/TR7	161
PT91-21B/TR9	161
PT91-21C	161
PT91-21C/TR10	161
PT91-21C/TR7	161
PT928-6B-F	156
PT928-6C-F	156
PT958-8C	156
RM-3638L	168
SIR12-21C/TR8	144
SIR19-21C/TR8	145
SIR19-315/TR8	145
SIR204-A	138

SIR204C	138
SIR234	138
SIR323-5	139
SIR333-A	139
SIR383C	139
SIR67-21C/TR8	147
SIR928-6C-F	143
TIL111	208
TIL113	201
TIL117	208

CONDITIONS OF RoHS

From July 1st, 2006, RoHS requires that all electrical equipment should not contain lead, mercury, cadmium, hexavalent chromium, polybrominated biphenyls (PBBs) or poly brominated diphenyl ethers (PBDEs), and the elements are restricted to certain amount (such as mercury in a wound lighting tube <5 mg, lead in CRT glass, soldering tin, etc.). Before the date every member of European Union must obey of environment on chemical regulation.

- According to RoHS part, the norm of restrict and limit used substance adopted by EVERLIGHT.

Name	Description	Criteria
Cadmium	Cadmium and its compounds must not be present in parts, components, materials or products. Cadmium and its compounds must not used as stabilizers, coloring agent or as a surface coating treatment in parts, components, materials or products.	< 5 ppm (Plastics) < 75 ppm (Metals)
Lead restrictions	Lead and/or lead compounds shall not be present in hardware components or parts, however, except solder, electrical components and interconnect materials. Lead carbonates and sulfates must not be used in any paint applied to parts, component, or products.	< 100 ppm (Plastics) < 1000 ppm (Others)
Mercury restrictions	Mercury must not be contained in any part, material, components or product, including, but not limited to switches, relays or electrical contacts. This restriction does not apply to lamps with less than 10 mg if mercury.	< 5 ppm
Hexavalent chromium (chromium VI) and hexavalent chromium compounds	Hexavalent chromium (chromium VI) and hexavalent chromium compounds must not be present in parts, components, materials or products.	< 2 ppm
Polybrominated Biphenyls (PBBs)	Plastics parts, pomponents, materials and products must not contain Polybrominated Biphenyls as flame retardants, specific PBBs, but are not limited to those listed in attachment item.	< 5 ppm
Polybrominated Diphenyl Ethers (PBDEs)	Plastic parts, components, materials and products must not contain Polybrominated Biphenyl Ethers, known as flame retardants, specific PBBEs, including, but are not limited to, those listed in attachment item.	< 5 ppm

Compliant with the following condition :

- RoHS for SGS report.

Div	Product P/N & Type	Catagory	RoHS & SGS report file
Visible Product Group	High Power LED	High Power LED	ELSH, ELSW, ELYI Series
	SMD For Lead Frame Type	SMD A	SMD A TYPE
	SMD For PCB Type	SMD B	SMD B TYPE
	SMD For Reflector Type	SMD C	SMD C TYPE
	Lead Lamp Super Bright Lamp LED	Lamp	Lamp Lead Frame – Iron
	Super Bright Lamp LED Outdoor Application Super Oval Type	Lamp	Lamp Lead Frame – Copper
	Super Flux LED (Power LED)	Lamp	Super Flux LED (Power LED) Series
	LED Assembly Lamp Injection-Assembly	Array	Array Series
	Digit Display Dot Matrix Display	Display	Display Series
	SMD Display	SMD-Display	SMD-Display
Infrared Product Group	Lamp Infrared Emitting Diode Lamp Photo Transistor Lamp Photo Diode	IR, PT, PD, 2PT	Lamp Series
	Side Looking Phototransistor Side Looking Dual Phototransistor Side Looking Infrared Emitting Diode	IR, PT, PD, 2PT	Side Looking Series
	SMD For Lead Frame Type	IR/PT/PD	SMD A TYPE
	SMD For PCB Type	IR/PT/PD	SMD B TYPE
	SMD For Reflector Type	IR/PT/PD	SMD C TYPE
	Transmissive ITR without Line	ITR	Transmissive ITR without Line Series
	Reflective ITR	ITR	ITR8307
	IRM SMD Type	IRM	IRM-2XXX, 3XXX Series
	IRM DIP Type IRM 8XXX-P Series	IRM IRM	IRM-VXXX, HXXX Series IRM-8XXX-P Series
Integrated Circuit Application	EL-81X Series	Photo Coupler	EL-817
Communication Product Group	PLT Series	Photo Link	PLT Series
	PLR Series	Photo Link	PLR Series
Ambient Light Sensor Group	Lamp Ambient Light Sensor SMD Ambient Light Sensor	ALS	ALS Lamp Series ALS SMD Series

APPLICATION NOTICE

Since we are continuously improving all of our products, the information listed in this Catalogue, which includes specifications, characteristics, data, materials used, structure, etc., are subject to change without prior notice. It is necessary that you request the newest specification sheet from Everlight when you place any inquiry or purchase order.

Please carefully read the specification sheet, and confirm your acceptance of the content. Everlight Electronics does not accept any liabilities for damages occurred due to the customer's lack of confirming the newest product specification.

It is important to strictly follow the maximum limit and other important instructions listed on the specifications sheet when using Everlight's products. The following is a list of special notes for products used in specific applications. It is recommended that customers read the instructions carefully before installing the products. Again, Everlight does not accept any liabilities for any improper use of Everlight's product or failure to follow the instructions listed herein:

Special Instruction:

1. Products listed in this Catalogue are designed primarily for the application listed below:
   A : Calculators
   B : Measurement equipment
   C : AV machines
   D : QA machines
   E : Operating machines
   F : Consumer electronics
   G : Telecommunications

While products meet the application listed above, additional attention is required when products are to be utilized in the instruments listed under Special Instruction Notes 2 and 3.

2. When high reliability and safety concerns are required, it is very important that the design be made to focus on safety and long term reliability. Special care should be given to assure that Everlight's products integrate and function properly with all other parts of the instrument. Instruments fall into these categories include:

   A : Instruments attached to transportation tools (aircraft, train, automobile)
   B : Traffic signs
   C : Gas leaking detectors and gas shutters
   D : Fire detectors
   E : Other safety detectors

3. When extremely high reliability and safety concerns are required, it is necessary that you contact Everlight for additional information before use. Instruments fall into these categories include:

   A : Aerospace instruments
   B : Telecommunication tools (main line)
   C : Nuclear weapon controls
   D : Medical instruments

4. Should you have any additional questions, please contact Everlight for details.

本資料所記載之製品的規格、特性、DATA、使用原料、構造…等，有時為了改良製品，無法事前通知，而逕行與予變更。因此請務必使用最新的規格書，並請針對內容加以確認。若因未確認規格書，導致使用次製品之機器或其他應用產品發生瑕疵時，敝公司將不負此責任。

使用本資料所記載之製品時，請遵守規格書所記載之絕對最大定格，使用上之注意事項，以及下列之注意點，若因不遵守規格書所記載之絕對最大定格，使用上之注意事項，以及下述之注意點，而導致發生損害問題時，敝公司將不負此責任。

注意項目：

1. 本資料所記載之製品，原則上是為了下述之用途而製造出來的產品
   A：電算機
   B：OA機器
   C：通信機器
   D：計測機器
   E：工作機器
   F：AV機器
   G：家電製品

若雖合乎上述用途，但是屬於下述2或3所記載之機器時，則需遵守個別產品之使用注意事項。

2. 若本資料所記載之製品用於下述講求高信賴信與安全性之用途時，因牽涉到機能與精度方面，為了維持這類機器的信賴性與安全性，請務必注重安全設計與長期性設計，並且需考慮整體機構間的關係，依機器整體之安全設計來使用。
   A：運送機器(飛機、火車、汽車)與控制安全性等相關之產品
   B：交通信號機
   C：瓦斯漏氣檢測關閉機
   D：防災裝置
   E：各種安全裝置

3. 若本資料所記載之製品用於下述講求高信賴性與安全性之用途時，因牽涉到機能與精度方面，請事先與敝公司聯絡。
   A：太空機器(航太儀器)
   B：通信機器(幹線)
   C：原子彈控制機器
   D：醫療機器

4. 涉及上述注意事項之任何一項時，如有疑問，請和敝公司業務人員聯絡。

HIGH POWER LED (SHUEN 炫, SHWO 爍, YI 熠 SERIES)
CIE BINNING RANKS

White Color
Cool-White Bin Coordinates

5000K				
Bin	50K-1	50K-2	50K-3	50K-4
Reference Range	4745~5000K	5000~5310K	4745~5000K	5000~5310K
CIE X	0.346	0.338	0.337	0.345
	0.345	0.337	0.337	0.344
	0.353	0.345	0.344	0.352
	0.355	0.346	0.345	0.353
CIE Y	0.369	0.362	0.349	0.356
	0.356	0.349	0.337	0.343
	0.362	0.356	0.343	0.349
	0.376	0.369	0.356	0.362

5700K				
Bin	57K-1	57K-2	57K-3	57K-4
Reference Range	5310~5700K	5700~6020K	5700~6020K	5310~5700K
CIE X	0.329	0.321	0.321	0.329
	0.329	0.321	0.322	0.329
	0.337	0.329	0.329	0.337
	0.338	0.329	0.329	0.337
CIE Y	0.354	0.346	0.335	0.342
	0.342	0.335	0.324	0.331
	0.349	0.342	0.331	0.337
	0.362	0.354	0.342	0.349

6500K				
Bin	65K-1	65K-2	65K-3	65K-4
Reference Range	6020~6500K	6500~7050K	6500~7050K	6020~6500K
CIE X	0.312	0.303	0.305	0.313
	0.313	0.305	0.307	0.314
	0.321	0.313	0.314	0.322
	0.321	0.312	0.313	0.321
CIE Y	0.339	0.330	0.321	0.329
	0.329	0.321	0.311	0.319
	0.337	0.329	0.319	0.326
	0.348	0.339	0.329	0.337

■ White Bin Structure

White Color SHUEN Series

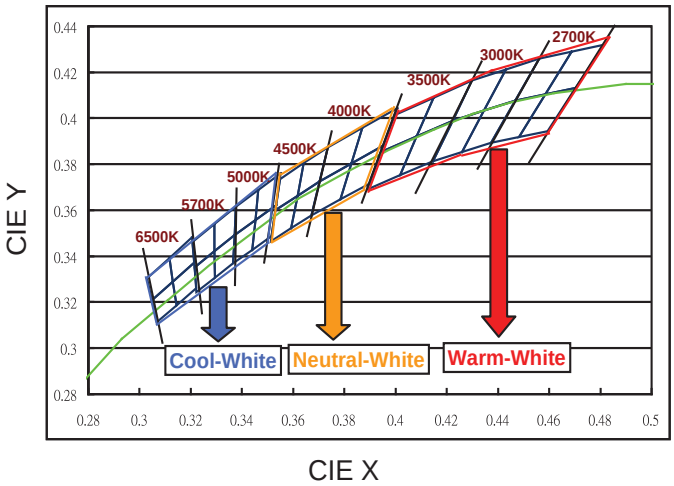

Chromaticity specification defined by ANSI

Natural-White Bin Coordinates

4000K				
Bin	40K-1	40K-2	40K-3	40K-4
Reference Range	3710~4000K	4000~4260K	4000~4260K	3710~4000K
CIE X	0.387	0.374	0.370	0.383
	0.383	0.370	0.367	0.378
	0.395	0.383	0.378	0.390
	0.401	0.387	0.383	0.395
CIE Y	0.396	0.387	0.373	0.380
	0.380	0.373	0.358	0.365
	0.388	0.380	0.365	0.372
	0.404	0.396	0.380	0.388

4500K				
Bin	45K-1	45K-2	45K-3	45K-4
Reference Range	4260~4500K	4500~4745K	4500~4745K	4260~4500K
CIE X	0.364	0.355	0.353	0.362
	0.362	0.353	0.351	0.359
	0.370	0.362	0.359	0.367
	0.374	0.364	0.362	0.370
CIE Y	0.381	0.374	0.360	0.366
	0.366	0.360	0.347	0.352
	0.373	0.366	0.352	0.358
	0.387	0.381	0.366	0.373

Warm-White Bin Coordinates

2700K				
Bin	27K-1	27K-2	27K-3	27K-4
Reference Range	2580~2700K	2700~2870K	2700~2870K	2580~2700K
CIE X	0.469	0.456	0.447	0.459
	0.459	0.447	0.437	0.448
	0.470	0.459	0.448	0.459
	0.481	0.469	0.459	0.470
CIE Y	0.429	0.426	0.408	0.410
	0.410	0.408	0.389	0.392
	0.413	0.410	0.392	0.394
	0.432	0.429	0.410	0.413

3000K				
Bin	30K-1	30K-2	30K-3	30K-4
Reference Range	2870~3000K	3000~3220K	3000~3220K	2870~3000K
CIE X	0.443	0.430	0.422	0.435
	0.435	0.422	0.415	0.426
	0.447	0.435	0.426	0.437
	0.456	0.443	0.435	0.447
CIE Y	0.421	0.417	0.399	0.403
	0.403	0.399	0.381	0.385
	0.408	0.403	0.385	0.389
	0.426	0.421	0.403	0.408

3500K				
Bin	35K-1	35K-2	35K-3	35K-4
Reference Range	3220~3500K	3500~3710K	3500~3710K	3220~3500K
CIE X	0.415	0.400	0.394	0.408
	0.408	0.394	0.389	0.402
	0.422	0.408	0.402	0.415
	0.430	0.415	0.408	0.422
CIE Y	0.409	0.402	0.385	0.392
	0.392	0.385	0.369	0.375
	0.399	0.392	0.375	0.381
	0.417	0.409	0.392	0.399

HIGH POWER LED (SHUEN 炫, SHWO 爍, YI 熠 SERIES)
BRIGHTNESS BINNING RANKS

Brightness (lm)

Luminous Flux Bins

Group	Binning	Minimum Photometric Flux (lm)	Maximum Photometric Flux (lm)
E	1	4	5
	2	5	6
	3	6	8
	4	8	10
	5	10	13
	6	13	17
	7	17	20
	8	20	23
	9	23	27
F	1	27	33
	2	33	39
	3	39	45
	4	45	52
	5	52	60
	6	60	70
	7	70	80
	8	80	90
	9	90	100
J	1	100	110
	2	110	120
	3	120	130
	4	130	140
	5	140	150
	6	150	160
	7	160	180
	8	180	200
	9	200	225
K	1	225	250
	2	250	275
	3	275	300
	4	300	325
	5	325	350
	6	350	375
	7	375	400
	8	400	425
	9	425	450
N	1	450	475
	2	475	500
	3	500	525
	4	525	550

Wavelength (nm)

Group	Binning	Minimum Dominant Wavelength (nm)	Maximum Dominant Wavelength (nm)
B Blue/ Royal-Blue	1	430	435
	2	435	440
	3	440	445
	4	445	450
	5	450	455
	6	455	460
	7	460	465
	8	465	470
G Green	1	520	525
	2	525	530
	3	530	535
	4	535	540
	5	540	545
	6	545	550
A Amber	1	580	582.5
	2	582	.5 585
	3	585	587.5
	4	587	.5 590
	5	590	592.5
	6	592	.5 595
R Red	3	610	615
	4	615	620
	5	620	625
	6	625	630
	7	630	635
D Deep-Red	1	635	640
	2	640	645
	3	645	650
	4	650	655
	5	655	660
	6	660	665
	7	665	670
	8	670	675
F Far-Red	1	700	710
	2	710	715
	3	715	720
	4	720	725
	5	725	730
	6	730	735
	7	735	740
	8	740	745

HIGH POWER LED (SHUEN 炫, SHWO 爍, YI 熠 SERIES)
FORWARD VOLTAGE BINNING RANKS

Shuen & Shwo

Forward Voltage Bins

Group Name	Bins
A	U1+U2+U3
B	U2+U3+U4
C	V1+V2+V3
D	V2+V3+V4
E	V3+V4+V5
F	V1+V2
G	V1

Group Name	Minimum Forward Voltage (V)	Maximum Forward Voltage (V)
U1	1.75	2.05
U2	2.05	2.35
U3	2.35	2.65
U4	2.65	2.95
V1	2.95	3.25
V2	3.25	3.55
V3	3.55	3.85
V4	3.85	4.15
V5	4.15	4.45

Yi (DC-5W)

Group Name	Bins
N	O4+O5+O6
O	O5+O6+O7
P	O4+O5+O6+O7
Q	O7+R1+R2
R	R1+R2+R3
S	R2+R3
T	R2+R3+R4

Bin	Minimum Forward Voltage (V)	Maximum Forward Voltage (V)
O1	4.5	5.0
O2	5.0	5.5
O3	5.5	6.0
O4	6.0	6.5
O5	6.5	7.0
O6	7.0	7.5
O7	7.5	8.0
R1	8.0	9.0
R2	9.0	10.0
R3	10.0	11.0
R4	11.0	12.0

HIGH POWER LED (HV - HIGH VOLTAGE SERIES)
FORWARD VOLTAGE BINNING RANKS

HV (1W)

Forward Voltage Bins For 110V

Group Name	Bins
A	A3+A4
B	A4+A5
C	A5+A6
D	A3+A4+A5
E	A4+A5+A6
F	A3+A4+A5+A6

Bin	Production Line	
	Minimum Voltage (V)	Maximum Voltage (V)
A1	43	45
A2	45	47
A3	47	49
A4	49	51
A5	51	53
A6	53	55
A7	55	57
A8	57	59
A9	59	61

HV (2W)

Forward Voltage Bins For 110V

Group Name	Bins
A	B3+B4
B	B4+B5
C	B5+B6
D	B3+B4+B5
E	B4+B5+B6
F	B3+B4+B5+B6

Bin	Production Line	
	Minimum Voltage (V)	Maximum Voltage (V)
B1	87	91
B2	91	95
B3	95	99
B4	99	103
B5	103	107
B6	107	111
B7	111	115
B8	115	119
B9	119	123

HV (4W)

Forward Voltage Bins For 110V

Group Name	Bins
A	B3+B4
B	B4+B5
C	B5+B6
D	B3+B4+B5
E	B4+B5+B6
F	B3+B4+B5+B6

Bin	Production Line	
	Minimum Voltage (V)	Maximum Voltage (V)
B1	87	91
B2	91	95
B3	95	99
B4	99	103
B5	103	107
B6	107	111
B7	111	115
B8	115	119
B9	119	123

Forward Voltage Bins For 220V

Group Name	Bins
H	C6+C7+C8
I	C7+C8+C9
J	C4+C5+C6+C7
K	C5+C6+C7+C8
L	C6+C7+C8+C9
M	C4+C5+C6+C7+C8
N	C5+C6+C7+C8+C9
O	C4+C5+C6+C7+C8+C9

Bin	Production Line	
	Minimum Voltage (V)	Maximum Voltage (V)
C1	175	180
C2	180	185
C3	185	190
C4	190	195
C5	195	200
C6	200	205
C7	205	210
C8	210	215
C9	215	220
D1	220	225
D2	225	230
D3	230	235
D4	235	240

HIGH POWER LED (EHP-A09K) BINNING RANKS

Color Bins

Group	Bin	Minimum Dominant Wavelength (nm)	Maximum Dominant Wavelength (nm)	Condition
Red	1	616	619	I_F =150mA
	2	619	622	
	3	622	625	
	4	625	628	
Yellow	1	583	586	
	2	586	589	
	3	589	592	
	4	592	595	
Green	1	516	519	
	2	519	522	
	3	522	525	
	4	525	528	
Blue	1	448	451	
	2	451	454	
	3	454	457	
	4	457	460	
	5	460	464	
	6	464	467	

Bin Range of Forward Voltage

Group	Min.	Max.	Unit	Condition
1	1.70	1.85	V	I_F =150mA
2	1.85	2.00		
3	2.00	2.15		
4	2.15	2.30		
5	2.30	2.45		
6	2.45	2.60		
7	2.60	2.75		
8	2.75	2.90		
9	2.90	3.05		
10	3.05	3.20		
11	3.20	3.35		
12	3.35	3.50		
13	3.50	3.65		
14	3.65	3.80		
15	3.80	3.95		
16	3.95	4.10		
17	4.10	4.25		

Bin Code of Luminous Intensity

Group	Min.	Max.	Unit	Condition
V2	900	1120	V	I_F =150mA
AA	1120	1400		
AB	1400	1800		
BA	1800	2240		
BB	2240	2800		
CA	2800	3550		
CB	3550	4500		
DA	4500	5600		
DB	5600	7100		
EA	7100	9000		

Note:
1. The standard shipping format for serial types includes a family bin of 3 individual brightness bins. Individual brightness bins cannot be ordered.
2. Only one bin will be shipped on each reel (there will be no mixing of two bins on each reel).

Cool White & Warm White Bin Code of Luminous Intensity

Group	Min.	Max.	Unit	Condition
CB	3550	4500	mcd	I_F =150mA
DA	4500	5600		
DB	5600	7100		
EA	7100	9000		

Note:
1. The standard shipping format for serial types includes a family bin of 3 individual brightness bins. Individual brightness bins cannot be ordered.
2. Only one bin will be shipped on each reel (there will be no mixing of two bin on each reel).

HIGH POWER LED (EHP-A09K) CIE BINNING RANKS

Cool White (Production Spec)

4500~5000K

Rank	CIE_x	CIE_y	Rank	CIE_x	CIE_y	Condition
U4	0.364	0.383	U7	0.344	0.344	I_F = 150mA
	0.367	0.400		0.343	0.331	
	0.348	0.385		0.357	0.343	
	0.347	0.372		0.360	0.357	
U5	0.364	0.383	U8	0.342	0.320	
	0.362	0.372		0.343	0.331	
	0.346	0.359		0.357	0.343	
	0.347	0.372		0.355	0.330	
U6	0.362	0.372	U9	0.342	0.320	
	0.360	0.357		0.355	0.330	
	0.344	0.344		0.353	0.315	
	0.346	0.359		0.341	0.305	

4500~5000K

Rank	CIE_x	CIE_y	Rank	CIE_x	CIE_y	Condition
V4	0.329	0.357	V7	0.329	0.331	I_F = 150mA
	0.329	0.369		0.344	0.344	
	0.348	0.385		0.343	0.331	
	0.347	0.372		0.329	0.320	
V5	0.329	0.345	V8	0.343	0.331	
	0.329	0.357		0.329	0.320	
	0.347	0.372		0.329	0.310	
	0.346	0.359		0.342	0.320	
V6	0.329	0.331	V9	0.329	0.310	
	0.329	0.345		0.342	0.320	
	0.346	0.359		0.341	0.305	
	0.344	0.344		0.330	0.300	

5650~6300K

Rank	CIE_x	CIE_y	Rank	CIE_x	CIE_y	Condition
W4	0.329	0.369	W7	0.329	0.331	I_F = 150mA
	0.329	0.357		0.329	0.320	
	0.315	0.344		0.318	0.310	
	0.314	0.355		0.317	0.320	
W5	0.329	0.345	W8	0.329	0.321	
	0.316	0.333		0.329	0.310	
	0.315	0.344		0.319	0.300	
	0.329	0.357		0.318	0.310	
W6	0.329	0.345	W9	0.321	0.290	
	0.329	0.331		0.330	0.300	
	0.317	0.320		0.329	0.310	
	0.316	0.333		0.319	0.300	

6300~7000K

Rank	CIE_x	CIE_y	Rank	CIE_x	CIE_y	Condition
X4	0.301	0.342	X7	0.308	0.311	I_F = 150mA
	0.314	0.355		0.317	0.320	
	0.315	0.344		0.319	0.300	
	0.303	0.333		0.311	0.293	
X5	0.305	0.322	X8	0.321	0.290	
	0.303	0.333		0.319	0.300	
	0.315	0.344		0.311	0.293	
	0.316	0.333		0.313	0.285	
X6	0.308	0.311				
	0.305	0.322				
	0.316	0.333				
	0.317	0.320				

7000~8000K

Rank	CIE_x	CIE_y	Rank	CIE_x	CIE_y	Condition
Y3-3	0.290	0.318	Y9-3	0.308	0.311	I_F = 150mA
	0.303	0.333		0.311	0.293	
	0.301	0.342		0.290	0.270	
	0.286	0.333		0.283	0.284	
Y6-3	0.308	0.311	Y1-3	0.302	0.283	
	0.283	0.284		0.311	0.293	
	0.274	0.301		0.313	0.285	
	0.303	0.333		0.305	0.273	

8000~9000K

Rank	CIE_x	CIE_y	Rank	CIE_x	CIE_y	Condition
Y3-2	0.281	0.309	Y9-2	0.308	0.311	I_F = 150mA
	0.290	0.318		0.283	0.284	
	0.286	0.333		0.274	0.301	
	0.276	0.321		0.303	0.333	
Y6-2	0.302	0.283	Y1-2	0.299	0.265	
	0.311	0.293		0.295	0.276	
	0.313	0.285		0.302	0.283	
	0.305	0.273		0.305	0.273	

9000~10000K

Rank	CIE_x	CIE_y	Rank	CIE_x	CIE_y	Condition
Y3-1	0.274	0.301	Y9-1	0.290	0.270	I_F = 150mA
	0.281	0.309		0.283	0.284	
	0.276	0.321		0.289	0.291	
	0.269	0.309		0.295	0.276	
Y6-1	0.283	0.284	Y1-1	0.295	0.276	
	0.274	0.301		0.299	0.265	
	0.281	0.309		0.295	0.259	
	0.289	0.291		0.290	0.270	

10000~14000K

Rank	CIE_x	CIE_y	Rank	CIE_x	CIE_y	Condition
S3-1	0.259	0.270	S9-1	0.270	0.260	I_F = 150mA
	0.274	0.301		0.283	0.284	
	0.269	0.309		0.290	0.270	
	0.251	0.280		0.280	0.248	
S6-1	0.274	0.301	S1-1	0.280	0.248	
	0.283	0.284		0.290	0.270	
	0.270	0.260		0.295	0.259	
	0.259	0.270		0.286	0.240	

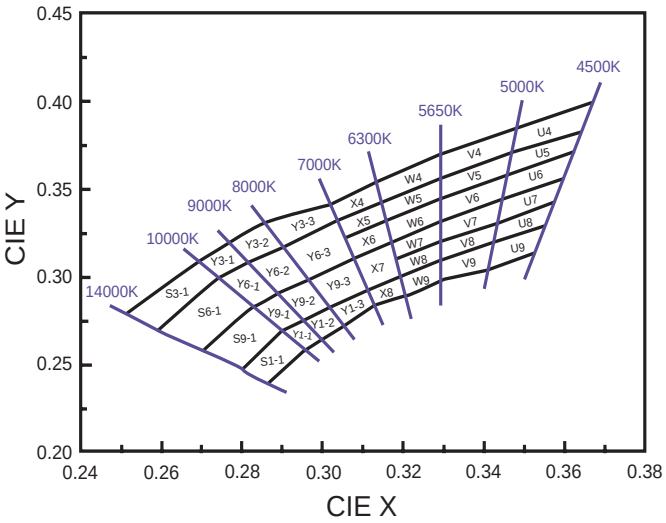

Warm White (Production Spec)

2760~2850K

Rank	CIE_x	CIE_y	Rank	CIE_x	CIE_y	Condition
M4	0.471	0.451	M7	0.444	0.399	I_F = 150mA
	0.487	0.454		0.458	0.403	
	0.477	0.437		0.449	0.388	
	0.461	0.433		0.436	0.384	
M5	0.461	0.433	M8	0.423	0.358	
	0.477	0.437		0.435	0.383	
	0.467	0.420		0.449	0.388	
	0.453	0.416		0.434	0.359	
M6	0.453	0.416	M9	0.411	0.334	
	0.467	0.420		0.423	0.358	
	0.458	0.403		0.434	0.359	
	0.444	0.399		0.421	0.334	

3500~3800K

Rank	CIE_x	CIE_y	Rank	CIE_x	CIE_y	Condition
R4	0.402	0.423	R7	0.387	0.374	I_F = 150mA
	0.421	0.433		0.402	0.382	
	0.415	0.416		0.397	0.367	
	0.396	0.404		0.383	0.360	
R5	0.396	0.404	R8	0.378	0.343	
	0.415	0.416		0.382	0.359	
	0.409	0.400		0.396	0.367	
	0.392	0.391		0.390	0.349	
R6	0.392	0.391	R9	0.373	0.327	
	0.409	0.400		0.378	0.343	
	0.402	0.382		0.390	0.349	
	0.387	0.374		0.384	0.331	

2850~3050K

Rank	CIE_x	CIE_y	Rank	CIE_x	CIE_y	Condition
N4	0.454	0.446	N7	0.429	0.394	I_F = 150mA
	0.471	0.451		0.444	0.399	
	0.461	0.433		0.436	0.384	
	0.446	0.429		0.422	0.379	
N5	0.446	0.429	N8	0.412	0.356	
	0.461	0.433		0.422	0.379	
	0.453	0.416		0.435	0.383	
	0.438	0.412		0.423	0.358	
N6	0.438	0.412	N9	0.402	0.334	
	0.453	0.416		0.412	0.356	
	0.444	0.399		0.423	0.358	
	0.429	0.394		0.411	0.334	

3800~4100K

Rank	CIE_x	CIE_y	Rank	CIE_x	CIE_y	Condition
S4	0.386	0.413	S7	0.374	0.366	I_F = 150mA
	0.402	0.423		0.387	0.374	
	0.396	0.404		0.383	0.360	
	0.381	0.394		0.371	0.352	
S5	0.381	0.394	S8	0.368	0.337	
	0.396	0.404		0.370	0.351	
	0.392	0.391		0.382	0.359	
	0.378	0.382		0.378	0.343	
S6	0.378	0.382	S9	0.364	0.322	
	0.392	0.391		0.368	0.337	
	0.387	0.374		0.378	0.343	
	0.374	0.366		0.373	0.327	

3050~3250K

Rank	CIE_x	CIE_y	Rank	CIE_x	CIE_y	Condition
P4	0.438	0.440	P7	0.416	0.389	I_F = 150mA
	0.454	0.446		0.429	0.394	
	0.446	0.429		0.422	0.379	
	0.431	0.423		0.410	0.374	
P5	0.431	0.423	P8	0.401	0.353	
	0.446	0.429		0.410	0.373	
	0.438	0.412		0.422	0.379	
	0.424	0.406		0.412	0.356	
P6	0.424	0.406	P9	0.393	0.333	
	0.438	0.412		0.401	0.353	
	0.429	0.394		0.412	0.356	
	0.416	0.389		0.402	0.334	

4100~4500K

Rank	CIE_x	CIE_y	Rank	CIE_x	CIE_y	Condition
T4	0.367	0.400	T7	0.359	0.356	I_F = 150mA
	0.386	0.413		0.374	0.366	
	0.381	0.394		0.371	0.352	
	0.364	0.383		0.357	0.343	
T5	0.364	0.383	T8	0.355	0.330	
	0.381	0.394		0.357	0.343	
	0.378	0.382		0.370	0.351	
	0.362	0.372		0.368	0.337	
T6	0.362	0.372	T9	0.353	0.315	
	0.378	0.382		0.355	0.330	
	0.374	0.366		0.368	0.337	
	0.359	0.356		0.364	0.322	

3250~3500K

Rank	CIE_x	CIE_y	Rank	CIE_x	CIE_y	Condition
Q4	0.421	0.433	Q7	0.402	0.382	I_F = 150mA
	0.438	0.440		0.416	0.389	
	0.431	0.423		0.410	0.374	
	0.415	0.416		0.397	0.367	
Q5	0.415	0.416	Q8	0.390	0.349	
	0.431	0.423		0.396	0.367	
	0.424	0.406		0.410	0.373	
	0.409	0.400		0.401	0.353	
Q6	0.409	0.400	Q9	0.384	0.331	
	0.424	0.406		0.390	0.349	
	0.416	0.389		0.401	0.353	
	0.402	0.382		0.393	0.333	

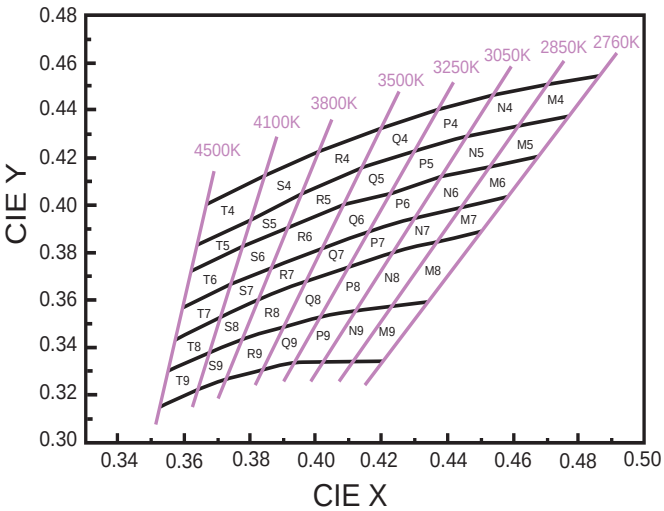

SMD LED : SURFACE MOUNT CHIP LED (PCB TYPE)
BRIGHTNESS BIN SELECTION

Luminous Intensity Groups

Unit : mcd

	C0: 0.28 … 0.45	Q ▶	Q1: 72.0 … 90.0
	D0: 0.45 … 0.70		Q2: 90.0 … 112
	E0: 0.70 … 1.1	R ▶	R1: 112 … 140
	F0: 1.1 … 1.8		R2: 140 … 180
	G0: 1.8 … 2.8	S ▶	S1: 180 … 225
	H0: 2.8 … 4.5		S2: 225 … 285
	J0: 4.5 … 7.2	T ▶	T1: 285 … 360
	K0: 7.2 … 11.5		T2: 360 … 450
L ▶	L1: 11.5 … 14.5	U ▶	U1: 450 … 565
	L2: 14.5 … 18.0		U2: 565 … 715
M ▶	M1: 18.0 … 22.5		V0: 715 … 1120
	M2: 22.5 … 28.5		W0: 1120 … 1800
N ▶	N1: 28.5 … 36.0		X0: 1800 … 2850
	N2: 36.0 … 45.0		Y0: 2850 … 4500
P ▶	P1: 45.0 … 57.0		
	P2: 57.0 … 72.0		

Note: The luminous intensity data did not include ±15% testing tolerance.

V_F (Forward Voltage Spec. Setup)

Unit : V

Forward Voltage Groups						Bin	Min.	Max.
					A	00	1.55	1.75
				B		0	1.75	1.95
			C			1	1.95	2.15
						2	2.15	2.35
						3	2.35	2.55
						4	2.55	2.75
		F		E	D	5	2.75	3.05
						6	3.05	3.35
						7	3.35	3.65
						8	3.65	3.95
N	F	K			J	10	2.70	2.90
				L		11	2.90	3.10
						12	3.10	3.30
						13	3.30	3.50
						14	3.50	3.70
				P	H	15	2.70	2.85
						16	2.85	3.00
						17	3.00	3.15
						18	3.15	3.30

Note: The forward voltage data did not include ±0.1V testing tolerance.

For Lighting Application Only

SMD LED : SURFACE MOUNT PLCC LED (REFLECTOR) / LOW POWER LED BRIGHTNESS BIN SELECTION

Luminous Intensity Groups

Unit : mcd

Bin code	Range		Bin code	Range		Bin code	Range		Bin code	Range		Bin code	Range		Bin code	Range	
	Min.	Max.		Min.	Max.		Min.	Max.		Min.	Max.		Min.	Max.		Min.	Max.
2A	0	200	2C	2000	2200	2E	4000	4200	2G	6000	6200	2J	8000	8200	8K	9600	9800
4A	200	400	4C	2200	2400	4E	4200	4400	4G	6200	6400	4J	8200	8400	AL	9800	10000
6A	400	600	6C	2400	2600	6E	4400	4600	6G	6400	6600	2J	8000	8200	2L	10000	10200
8A	600	800	8C	2600	2800	8E	4600	4800	8G	6600	6800	4J	8200	8400	4L	10200	10400
AB	800	1000	AD	2800	3000	AF	4800	5000	AH	6800	7000	6J	8400	8600	6L	10400	10600
2B	1000	1200	2D	3000	3200	2F	5000	5200	2H	7000	7200	8J	8600	8800	8L	10600	10800
4B	1200	1400	4D	3200	3400	4F	5200	5400	4H	7200	7400	AK	8800	9000	AM	10800	11000
6B	1400	1600	6D	3400	3600	6F	5400	5600	6H	7400	7600	2K	9000	9200			
8B	1600	1800	8D	3600	3800	8F	5600	5800	8H	7600	7800	4K	9200	9400			
AC	1800	2000	AE	3800	4000	AG	5800	6000	AJ	7800	8000	6K	9400	9600			

V_F (Forward Voltage Spec. Setup)

Unit : V

Forward Voltage Groups		Bin	Min.	Max.
G		34	2.7	2.8
		35	2.8	2.9
	B2	36	2.9	3
		37	3	3.1
		38	3.1	3.2
		39	3.2	3.3
		40	3.3	3.4
		41	3.4	3.5
		42	3.5	3.6
		43	3.6	3.7

Bin Structure

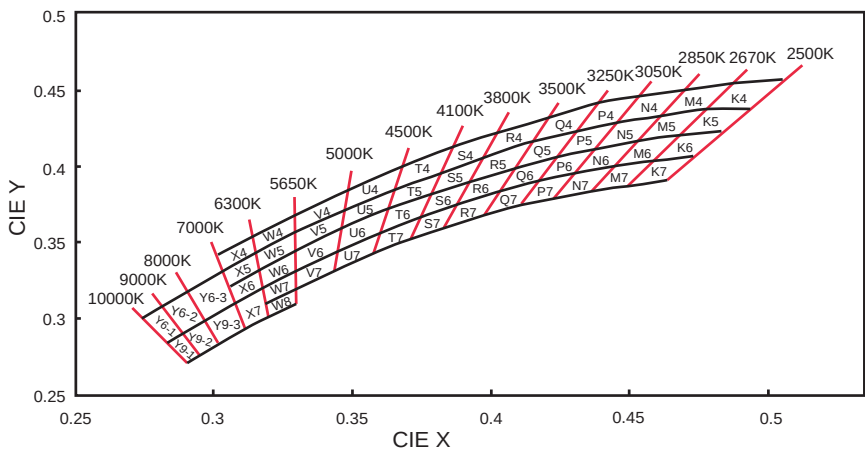

Bin Coordinate

10000K~9000K			9000K~8000K			8000K~7000K			7000K~6300K			6300K~5650K			5650K~5000K		
Rank	CIE_x	CIE_y	Rank	CIE_x	CIE_y	Rank	CIE_x	CIE_y	Rank	CIE_x	CIE_y	Rank	CIE_x	CIE_y	Rank	CIE_x	CIE_y
Y6-1	0.2740	0.3010	Y6-2	0.2810	0.3090	Y6-3	0.2900	0.3180	X4	0.3011	0.3422	W4	0.3136	0.3550	V4	0.3286	0.3690
	0.2810	0.3090		0.2900	0.3180		0.3031	0.3327		0.3136	0.3550		0.3286	0.3690		0.3481	0.3856
	0.2890	0.2910		0.2970	0.3000		0.3076	0.3108		0.3148	0.3444		0.3288	0.3569		0.3469	0.3717
	0.2830	0.2840		0.2890	0.2910		0.2970	0.3000		0.3031	0.3327		0.3148	0.3444		0.3288	0.3569
Y9-1	0.2830	0.2840	Y9-2	0.2890	0.2910	Y9-3	0.2970	0.3000	X5	0.3031	0.3327	W5	0.3148	0.3444	V5	0.3288	0.3569
	0.2890	0.2910		0.2970	0.3000		0.3076	0.3108		0.3148	0.3444		0.3288	0.3569		0.3469	0.3717
	0.2950	0.2760		0.3020	0.2830		0.3112	0.2932		0.3160	0.3332		0.3290	0.3451		0.3458	0.3592
	0.2900	0.2700		0.2950	0.2760		0.3020	0.2830		0.3052	0.3224		0.3160	0.3332		0.3290	0.3451
									X6	0.3052	0.3224	W6	0.3160	0.3332	V6	0.3290	0.3451
										0.3160	0.3332		0.3290	0.3451		0.3458	0.3592
										0.3175	0.3204		0.3292	0.3313		0.3444	0.3442
										0.3076	0.3108		0.3175	0.3204		0.3292	0.3313
									X7	0.3076	0.3108	W7	0.3175	0.3204	V7	0.3292	0.3313
										0.3175	0.3204		0.3292	0.3313		0.3444	0.3442
										0.3196	0.3013		0.3294	0.3202		0.3434	0.3320
										0.3112	0.2932		0.3186	0.3102		0.3294	0.3202
												W8	0.3186	0.3102			
													0.3294	0.3202			
													0.3295	0.3105			
													0.3196	0.3013			

For Lighting Application Only

SMD LED : SURFACE MOUNT PLCC LED (REFLECTOR) / LOW POWER LED BRIGHTNESS BIN SELECTION

Bin Structure

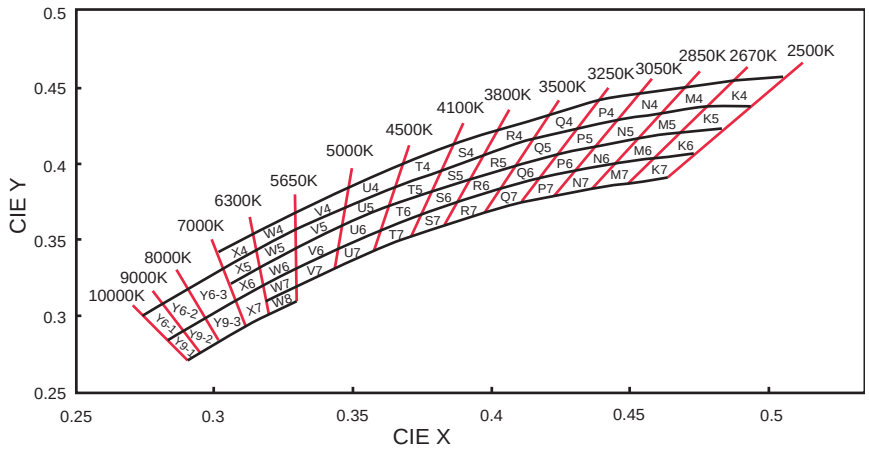

Bin Coordinate

5000K~4500K			4500K~4100K			4100K~3800K			3800K~3500K			3500K~3250K			3250K~3050K		
Rank	CIE_x	CIE_y	Rank	CIE_x	CIE_y	Rank	CIE_x	CIE_y	Rank	CIE_x	CIE_y	Rank	CIE_x	CIE_y	Rank	CIE_x	CIE_y
U4	0.3481	0.3856	T4	0.3673	0.4003	S4	0.3860	0.4130	R4	0.4023	0.4228	Q4	0.4209	0.4326	P4	0.4385	0.4404
	0.3673	0.4003		0.3860	0.4130		0.4023	0.4228		0.4209	0.4326		0.4385	0.4404		0.4538	0.4460
	0.3642	0.3829		0.3811	0.3937		0.3963	0.4035		0.4148	0.4161		0.4312	0.4234		0.4456	0.4287
	0.3469	0.3717		0.3642	0.3829		0.3811	0.3937		0.3963	0.4035		0.4148	0.4161		0.4312	0.4234
U5	0.3469	0.3717	T5	0.3642	0.3829	S5	0.3811	0.3937	R5	0.3963	0.4035	Q5	0.4148	0.4161	P5	0.4312	0.4234
	0.3642	0.3829		0.3811	0.3937		0.3963	0.4035		0.4148	0.4161		0.4312	0.4234		0.4456	0.4287
	0.3622	0.3716		0.3783	0.3825		0.3924	0.3909		0.4086	0.3995		0.4240	0.4065		0.4376	0.4116
	0.3458	0.3592		0.3622	0.3716		0.3783	0.3825		0.3924	0.3909		0.4086	0.3995		0.4240	0.4065
U6	0.3458	0.3592	T6	0.3622	0.3716	S6	0.3783	0.3825	R6	0.3924	0.3909	Q6	0.4086	0.3995	P6	0.4240	0.4065
	0.3622	0.3716		0.3783	0.3825		0.3924	0.3909		0.4086	0.3995		0.4240	0.4065		0.4376	0.4116
	0.3594	0.3557		0.3741	0.3658		0.3871	0.3739		0.4021	0.3822		0.4165	0.3890		0.4294	0.3943
	0.3444	0.3442		0.3594	0.3557		0.3741	0.3658		0.3871	0.3739		0.4021	0.3822		0.4165	0.3890
U7	0.3444	0.3442	T7	0.3594	0.3557	S7	0.3741	0.3658	R7	0.3871	0.3739	Q7	0.4021	0.3822	P7	0.4165	0.3890
	0.3594	0.3557		0.3741	0.3658		0.3871	0.3739		0.4021	0.3822		0.4165	0.3890		0.4294	0.3943
	0.3571	0.3426		0.3706	0.3520		0.3826	0.3595		0.3966	0.3673		0.4100	0.3738		0.4221	0.3790
	0.3434	0.3320		0.3571	0.3426		0.3706	0.3520		0.3826	0.3595		0.3966	0.3673		0.4100	0.3738

3050K~2850K			2850K~2670K			2670K~2500K		
Rank	CIE_x	CIE_y	Rank	CIE_x	CIE_y	Rank	CIE_x	CIE_y
N4	0.4538	0.4460	M4	0.4705	0.4508	K4	0.4866	0.4542
	0.4705	0.4508		0.4866	0.4542		0.5060	0.4579
	0.4614	0.4333		0.4767	0.4366		0.4945	0.4395
	0.4456	0.4287		0.4614	0.4333		0.4767	0.4366
N5	0.4456	0.4287	M5	0.4614	0.4333	K5	0.4767	0.4366
	0.4614	0.4333		0.4767	0.4366		0.4945	0.4395
	0.4525	0.4162		0.4671	0.4196		0.4840	0.4235
	0.4376	0.4116		0.4525	0.4162		0.4671	0.4196
N6	0.4376	0.4116	M6	0.4525	0.4162	K6	0.4671	0.4196
	0.4525	0.4162		0.4671	0.4196		0.4840	0.4235
	0.4436	0.3991		0.4577	0.4029		0.4740	0.4070
	0.4294	0.3943		0.4436	0.3991		0.4577	0.4029
N7	0.4294	0.3943	M7	0.4436	0.3991	K7	0.4577	0.4029
	0.4436	0.3991		0.4577	0.4029		0.4740	0.4070
	0.4356	0.3837		0.4490	0.3875		0.4640	0.3912
	0.4221	0.3790		0.4356	0.3837		0.4490	0.3875

SMD LED MID-POWER (62-227B SERIES)
BRIGHTNESS BIN SELECTION

Luminous Flux Characteristics

Unit : lm

Group	Bin	Min	Max
F	F3	0.2	0.5
	F4	0.5	1
G	G3	1	2
	G4	2	3
H	H3	3	4
	H4	4	5
J	J3	5	6
	J4	6	8
K	K3	8	10
	K4	10	13
L	L3	13	16
	L4	16	19
M	M3	19	21
	M4	21	24
N	N3	24	27
	N4	27	33
P	P3	33	39
	P4	39	45
Q	Q3	45	52
	Q4	52	60
R	R3	60	70
	R4	70	80
S	S3	80	90
	S4	90	100

V_F Group Bin Code

Unit : V

Group	Bin	Min.	Max
G	34	2.70	2.80
	35	2.80	2.90
	36	2.90	3.00
	37	3.00	3.10
	38	3.10	3.20
	39	3.20	3.30
	40	3.30	3.40
	41	3.40	3.50
	42	3.50	3.60
	43	3.60	3.70
S2	5#8	5.80	5.90
	5#9	5.90	6.00
	6#0	6.00	6.10
	6#1	6.10	6.20
	6#2	6.20	6.30
	6#3	6.30	6.40
	6#4	6.40	6.50
	6#5	6.50	6.60
	6#6	6.60	6.70
	6#7	6.70	6.80
	6#8	6.80	6.90
	6#9	6.90	7.00

■ White Bin Structure

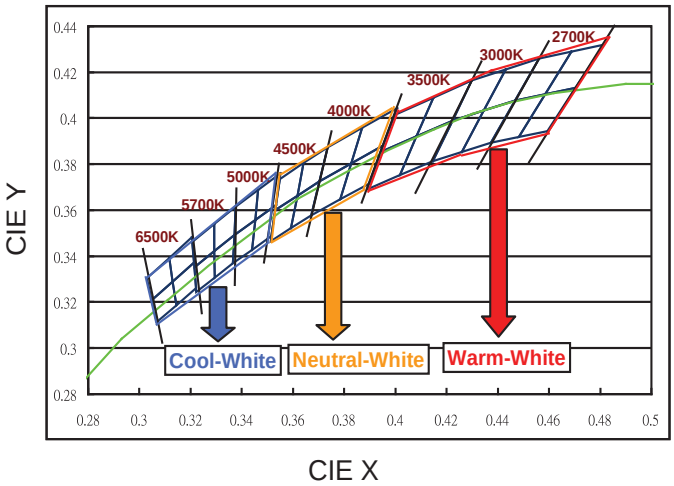

Chromaticity specification defined by ANSI

SMD LED (45, 99 SERIES)
BRIGHTNESS BIN SELECTION

Luminous Intensity Groups

Unit : mcd

Bin	Min.	Max.	Bin	Min.	Max.	Bin	Min.	Max.	Bin	Min.	Max.	Bin	Min.	Max.	Bin	Min.	Max.
01	500	600	12	900	930	23	1250	1300	34	1800	1850	45	2500	2600	H42	2200	2250
02	600	630	13	930	960	24	1300	1350	35	1850	1900	46	2600	2700	H43	2250	2300
03	630	660	14	960	990	25	1350	1400	36	1900	1950	47	2700	2800	H44	2300	2350
04	660	690	15	990	1020	26	1400	1450	37	1950	2000	48	2800	2900	H45	2350	2400
05	690	720	16	1020	1050	27	1450	1500	38	2000	2050	49	2900	3000	H46	2400	2450
06	720	750	17	1050	1080	28	1500	1550	39	2050	2100	50	3000	3100	H47	2450	2500
07	750	780	18	1080	1110	29	1550	1600	40	2100	2150	51	3100	3200	H48	2500	2550
08	780	810	19	1110	1140	30	1600	1650	41	2150	2200				H49	2550	2600
09	810	840	20	1140	1170	31	1650	1700	42	2200	2300				H50	2600	2650
10	840	870	21	1170	1200	32	1700	1750	43	2300	2400				H51	2650	2700
11	870	900	22	1200	1250	33	1750	1800	44	2400	2500						

Note: Tolerance of Luminous Intensity: ±11%

V_F (Forward Voltage Spec. Setup)

Unit : V

Groups	Bin	Min.	Max.	Groups	Bin	Min.	Max.	Groups	Bin	Min.	Max.
0, 1, 2, 3, 4, 5, 6, 7, 8, D	6-1	2.95	3.05	A, G	6-1-1	2.95	3.00	9	6-11	3.00	3.05
	6-2	3.05	3.15		6-1-2	3.00	3.05		6-2	3.05	3.15
	7-1	3.15	3.25		6-2-1	3.05	3.10		7-1	3.15	3.25
	7-2	3.25	3.35		6-2-2	3.10	3.15		7-2	3.25	3.35
	8-1	3.35	3.45		7-1-1	3.15	3.20		8-1	3.35	3.45
	8-2	3.45	3.55		7-1-2	3.20	3.25		8-11	3.45	3.5
	9-1	3.55	3.65		7-2-1	3.25	3.30				
	9-2	3.65	3.75		7-2-2	3.30	3.35				
					8-1-1	3.35	3.40				
					8-1-2	3.40	3.45				

Groups	Bin	Min.	Max.
L, N	5-1-3	2.8	2.9
R, L, B, K, E	5-2-3	2.9	3.0
R, L, N, B, C, K, H, E, Q, F	6-1-3	3.0	3.1
	6-2-3	3.1	3.2
	7-1-3	3.2	3.3
	7-2-3	3.3	3.4
	8-1-3	3.4	3.5
M	10	5.8	6.0
	11	6.0	6.2
	12	6.2	6.4
	13	6.4	6.6

Note: Tolerance of Forward Voltage: ±0.05V

Chromaticity Diagram

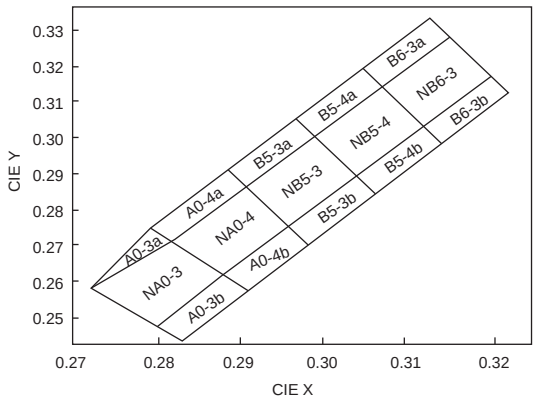

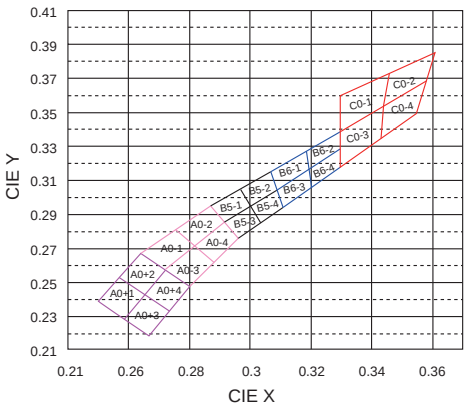

Bin Code of Chromaticity Coordinates

Rank	CIE_x	CIE_y	Rank	CIE_x	CIE_y	Rank	CIE_x	CIE_y	Rank	CIE_x	CIE_y
NA0-3	0.2800	0.2480	NB5-3	0.2960	0.2760	A0-3a	0.2720	0.2580	B5-3b	0.2980	0.2710
	0.2720	0.2580		0.2910	0.2870		0.2793	0.2755		0.2960	0.2760
	0.2820	0.2720		0.2990	0.3010		0.2820	0.2720		0.3040	0.2900
	0.2880	0.2620		0.3040	0.2900					0.3062	0.2853
NA0-4	0.2880	0.2620	NB5-4	0.3040	0.2900	A0-3b	0.2830	0.2440	B5-4a	0.2990	0.3010
	0.2820	0.2720		0.2990	0.3010		0.2800	0.2480		0.2968	0.3058
	0.2910	0.2870		0.3070	0.3150		0.2880	0.2620		0.3048	0.3198
	0.2960	0.2760		0.3120	0.3040		0.2910	0.2580		0.3070	0.3150
NB6-3	0.3120	0.3040				A0-4a	0.2820	0.2720	B5-4b	0.3062	0.2853
	0.3070	0.3150					0.2793	0.2755		0.3040	0.2900
	0.3150	0.3290					0.2887	0.2916		0.3120	0.3040
	0.3200	0.3180					0.2910	0.2870		0.3142	0.2993
						A0-4b	0.2910	0.2580	B6-3a	0.3070	0.3150
							0.2880	0.2620		0.3048	0.3198
							0.2960	0.2760		0.3128	0.3338
							0.2980	0.2710		0.3150	0.3290
						B5-3a	0.2910	0.2870	B6-3b	0.3142	0.2993
							0.2887	0.2916		0.3120	0.3040
							0.2968	0.3058		0.3200	0.3180
							0.2990	0.3010		0.3222	0.3133

Rank	CIE_x	CIE_y	Rank	CIE_x	CIE_y	Rank	CIE_x	CIE_y	Rank	CIE_x	CIE_y
A0+1	0.2569	0.2528	A0+3	0.2652	0.2429	B5-1	0.2915	0.2855	B5-3	0.2960	0.2760
	0.2498	0.2385		0.2584	0.2283		0.2870	0.2950		0.2915	0.2855
	0.2584	0.2283		0.2666	0.2185		0.2970	0.3050		0.3003	0.2950
	0.2652	0.2429		0.2733	0.2333		0.3003	0.2950		0.3035	0.2850
A0+2	0.2640	0.2670	A0+4	0.2720	0.2575	B5-2	0.3003	0.2950	B5-4	0.3035	0.2850
	0.2569	0.2528		0.2652	0.2429		0.2970	0.3050		0.3003	0.2950
	0.2652	0.2429		0.2733	0.2333		0.3070	0.3150		0.3090	0.3045
	0.2720	0.2575		0.2800	0.2480		0.3090	0.3045		0.3110	0.2940
A0-1	0.2720	0.2575	A0-3	0.2800	0.2480	B6-1	0.3090	0.3045	B6-3	0.3110	0.2940
	0.2640	0.2670		0.2720	0.2575		0.3070	0.3150		0.3090	0.3045
	0.2755	0.2810		0.2818	0.2715		0.3185	0.3270		0.3195	0.3165
	0.2818	0.2715		0.2879	0.2619		0.3195	0.3165		0.3205	0.3060
A0-2	0.2818	0.2715	A0-4	0.2879	0.2619	B6-2	0.3195	0.3165	B6-4	0.3205	0.3060
	0.2755	0.2810		0.2818	0.2715		0.3185	0.3270		0.3195	0.3165
	0.2870	0.2950		0.2915	0.2855		0.3300	0.3390		0.3300	0.3285
	0.2915	0.2855		0.2960	0.2760		0.3300	0.3285		0.3300	0.3180

Note: Tolerance of Chromaticity Coordinates: ±0.01

SMD LED (45-21S, 62-127 SERIES)
BRIGHTNESS BIN SELECTION

Luminous Flux Groups

Unit : lm

Bin	Min.	Max.	Bin	Min.	Max.	Bin	Min.	Max.	Bin	Min.	Max.
11	11	12	23	23	24	35	35	36	47	47	48
12	12	13	24	24	25	36	36	37	48	48	49
13	13	14	25	25	26	37	37	38	49	49	50
14	14	15	26	26	27	38	38	39	50	50	51
15	15	16	27	27	28	39	39	40	51	51	52
16	16	17	28	28	29	40	40	41	52	52	53
17	17	18	29	29	30	41	41	42	53	53	54
18	18	19	30	30	31	42	42	43	54	54	55
19	19	20	31	31	32	43	43	44	55	55	56
20	20	21	32	32	33	44	44	45			
21	21	22	33	33	34	45	45	46			
22	22	23	34	34	35	46	46	47			

Note: Tolerance of Luminous Intensity: ±7%

Forward Voltage

Unit : V

Single Chip			Two Chips					
			Parallel			Serial		
Bin	Min.	Max.	Bin	Min.	Max.	Bin	Min.	Max.
A	2.9	3.0	PA	2.9	3.0	S8	5.8	6.0
B	3.0	3.1	PB	3.0	3.1	S9	6.0	6.2
C	3.1	3.2	PC	3.1	3.2	SA	6.2	6.4
D	3.2	3.3	PD	3.2	3.3	SB	6.4	6.6
E	3.3	3.4	PE	3.3	3.4	SC	6.6	6.8
F	3.4	3.5	PF	3.4	3.5	SD	6.8	7.0
G	3.5	3.6	PG	3.5	3.6	SE	7.0	7.2

Note: Tolerance of Forward Voltage: ±0.05V

Bin Code of Chromaticity Coordinates

Condition : I_F=60/120mA

Rank	CIE_x	CIE_y	Rank	CIE_x	CIE_y	Rank	CIE_x	CIE_y	Rank	CIE_x	CIE_y	Rank	CIE_x	CIE_y	Rank	CIE_x	CIE_y
K1	0.2247	0.2082	K2	0.2288	0.2166	M3	0.2503	0.2154	N3	0.2590	0.2106	K6	0.2451	0.2504	K7	0.2492	0.2588
	0.2206	0.1997		0.2247	0.2082		0.2462	0.2070		0.2549	0.2022		0.2410	0.2419		0.2451	0.2504
	0.2293	0.1949		0.2334	0.2034		0.2549	0.2022		0.2636	0.1974		0.2497	0.2371		0.2538	0.2456
	0.2334	0.2034		0.2375	0.2118		0.2590	0.2106		0.2677	0.2058		0.2538	0.2456		0.2579	0.2540
L1	0.2247	0.2082	L2	0.2288	0.2166	K4	0.2457	0.2287	K5	0.2410	0.2419	L6	0.2451	0.2504	L7	0.2492	0.2588
	0.2334	0.2034		0.2375	0.2118		0.2416	0.2202		0.2370	0.2335		0.2538	0.2456		0.2579	0.2540
	0.2293	0.1949		0.2334	0.2034		0.2329	0.2250		0.2457	0.2288		0.2497	0.2371		0.2538	0.2456
	0.2380	0.1901		0.2421	0.1986		0.2370	0.2335		0.2497	0.2371		0.2584	0.2323		0.2625	0.2408
M1	0.2421	0.1986	M2	0.2462	0.2070	L4	0.2457	0.2287	L5	0.2410	0.2419	M6	0.2625	0.2408	M7	0.2666	0.2492
	0.2334	0.2034		0.2375	0.2118		0.2544	0.2239		0.2497	0.2371		0.2538	0.2456		0.2579	0.2540
	0.2421	0.1986		0.2462	0.2070		0.2503	0.2154		0.2457	0.2287		0.2625	0.2408		0.2666	0.2492
	0.2380	0.1901		0.2421	0.1986		0.2416	0.2202		0.2544	0.2239		0.2584	0.2323		0.2625	0.2408
N1	0.2467	0.1853	N2	0.2508	0.1938	M4	0.2457	0.2287	M5	0.2584	0.2323	N6	0.2671	0.2275	N7	0.2712	0.2360
	0.2508	0.1938		0.2549	0.2022		0.2544	0.2239		0.2497	0.2371		0.2712	0.2360		0.2753	0.2444
	0.2421	0.1986		0.2462	0.2070		0.2631	0.2191		0.2584	0.2323		0.2625	0.2408		0.2666	0.2492
	0.2508	0.1938		0.2549	0.2022		0.2590	0.2106		0.2544	0.2239		0.2712	0.2360		0.2753	0.2444
K3	0.2329	0.2250	L3	0.2416	0.2202	N4	0.2503	0.2154	N5	0.2631	0.2191	K8	0.2533	0.2672	L8	0.2620	0.2624
	0.2288	0.2166		0.2375	0.2118		0.2544	0.2239		0.2671	0.2275		0.2492	0.2588		0.2579	0.2540
	0.2375	0.2118		0.2462	0.2070		0.2631	0.2191		0.2584	0.2323		0.2579	0.2540		0.2666	0.2492
	0.2416	0.2202		0.2503	0.2154		0.2718	0.2143		0.2671	0.2275		0.2620	0.2624		0.2707	0.2576

Rank	CIE_x	CIE_y	Rank	CIE_x	CIE_y	Rank	CIE_x	CIE_y	Rank	CIE_x	CIE_y
M8	0.2707	0.2576	N8	0.2794	0.2528	KB	0.2656	0.2927	LB	0.2743	0.2879
	0.2666	0.2492		0.2753	0.2444		0.2615	0.2842		0.2702	0.2794
	0.2753	0.2444		0.2840	0.2396		0.2702	0.2794		0.2789	0.2746
	0.2794	0.2528		0.2881	0.2480		0.2743	0.2879		0.2830	0.2831
K9	0.2574	0.2757	KA	0.2615	0.2842	MB	0.2830	0.2831	NB	0.2917	0.2783
	0.2533	0.2672		0.2574	0.2757		0.2789	0.2746		0.2876	0.2698
	0.2620	0.2624		0.2661	0.2709		0.2876	0.2698		0.2963	0.2650
	0.2661	0.2709		0.2702	0.2794		0.2917	0.2783		0.3004	0.2735
L9	0.2574	0.2757	LA	0.2615	0.2842						
	0.2661	0.2709		0.2702	0.2794						
	0.2620	0.2624		0.2661	0.2709						
	0.2707	0.2576		0.2748	0.2661						
M9	0.2748	0.2661	MA	0.2789	0.2746						
	0.2661	0.2709		0.2702	0.2794						
	0.2748	0.2661		0.2789	0.2746						
	0.2707	0.2576		0.2748	0.2661						
N9	0.2794	0.2528	NA	0.2835	0.2613						
	0.2835	0.2613		0.2876	0.2698						
	0.2748	0.2661		0.2789	0.2746						
	0.2835	0.2613		0.2876	0.2698						

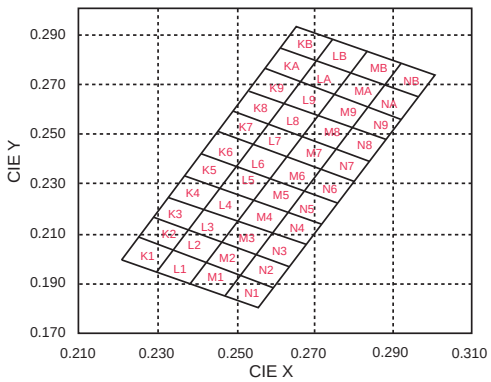

SMD LED (AUTOMOTIVE APPLICATION)
BRIGHTNESS BIN SELECTION

Bin Range of Chromaticity Coordinates

(I_F=20mA / Ta=25°C)

Color Ranks		CIE			
A1	X	0.255	0.264	0.280	0.270
	Y	0.245	0.267	0.248	0.230
A0	X	0.264	0.283	0.296	0.280
	Y	0.267	0.305	0.267	0.248
B3	X	0.283	0.304	0.307	0.287
	Y	0.305	0.330	0.315	0.295
B4	X	0.304	0.330	0.330	0.307
	Y	0.330	0.360	0.339	0.315
B5	X	0.287	0.307	0.311	0.296
	Y	0.295	0.315	0.294	0.276
B6	X	0.307	0.330	0.330	0.311
	Y	0.315	0.339	0.318	0.294
C0	X	0.330	0.361	0.355	0.330
	Y	0.360	0.385	0.350	0.318

Note: Measurement uncertainty of the color coordinates ±0.01

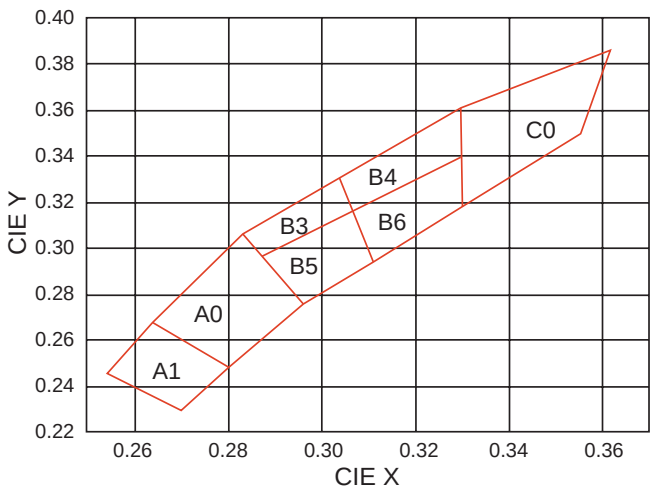

Bin Range of Luminous Intensity

Unit : mcd

Group	Bin	Min	Max
C	C1	0.28	0.36
	C2	0.36	0.45
D	D1	0.45	0.56
	D2	0.56	0.71
E	E1	0.71	0.9
	E2	0.9	1.12
F	F1	1.12	1.4
	F2	1.4	1.8
G	G1	1.8	2.24
	G2	2.24	2.8
H	H1	2.8	3.55
	H2	3.55	4.5
J	J1	4.5	5.6
	J2	5.6	7.1
K	K1	7.1	9
	K2	9	11.2
L	L1	11.2	14
	L2	14	18
M	M1	18	22.4
	M2	22.4	28
N	N1	28	35.5
	N2	35.5	45
P	P1	45	56
	P2	56	71
Q	Q1	71	90
	Q2	90	112
R	R1	112	140
	R2	140	180
S	S1	180	224
	S2	224	280
T	T1	280	355
	T2	355	450
U	U1	450	560
	U2	560	710
V	V1	710	900
	V2	900	1120
AW	AA	1120	1400
	AB	1400	1800
BW	BA	1800	2240
	BB	2240	2800
CW	CA	2800	3550
	CB	3550	4500
DW	DA	4500	5600
	DB	5600	7100
EW	EA	7100	9000
	EB	9000	11200
FW	FA	11200	14000
	FB	14000	18000
GW	GA	18000	22400
	GB	22400	28000
HW	HA	28000	35500
	HB	35500	45000
IW	IA	45000	56000
	IB	56000	71000

SUPER FLUX LED
BRIGHTNESS BIN SELECTION

Bin Range of Total Flux

Unit : lm

Group	Bin	Min	Max	Group	Bin	Min	Max
A	A1	6	8	N	N1	715	900
	A2	8	10		N2	900	1125
B	B1	10	12.5	P	P1	1125	1425
	B2	12.5	15		P2	1425	1800
C	C1	15	18	Q	Q1	1800	2250
	C2	18	22		Q2	2250	2850
D	D1	22	28	R	R1	2850	3600
	D2	28	35		R2	3600	4500
E	E1	35	42	S	S1	4500	5650
	E2	42	50		S2	5650	7150
F	F1	50	60	T	T1	7150	9000
	F2	60	70		T2	9000	11250
G	G1	70	85	U	U1	11250	14250
	G2	85	100		U2	14250	18000
H	H1	100	120	V	V1	18000	22500
	H2	120	140		V2	22500	28500
J	J1	140	170	W	W1	28500	36000
	J2	170	200		W2	36000	43200
K	K1	200	240	X	X1	43200	51840
	K2	240	285		X2	51840	62200
L	L1	285	360	Y	Y1	62200	74600
	L2	360	450		Y2	74600	87500
M	M1	450	565				
	M2	565	715				

Note: Tolerance of Forward Voltage: ±0.05V

Color Ranks

(I_F=20mA / Ta=25ºC)

Color Ranks		CIE			
A1	X	0.255	0.264	0.280	0.270
	Y	0.245	0.267	0.248	0.230
A0	X	0.264	0.283	0.296	0.280
	Y	0.267	0.305	0.267	0.248
B3	X	0.283	0.304	0.307	0.287
	Y	0.305	0.330	0.315	0.295
B4	X	0.304	0.330	0.330	0.307
	Y	0.330	0.360	0.339	0.315
B5	X	0.287	0.307	0.311	0.296
	Y	0.295	0.315	0.294	0.276
B6	X	0.307	0.330	0.330	0.311
	Y	0.315	0.339	0.318	0.294
C0	X	0.330	0.361	0.355	0.330
	Y	0.360	0.385	0.350	0.318

Note: Measurement uncertainty of the color coordinates ±0.01

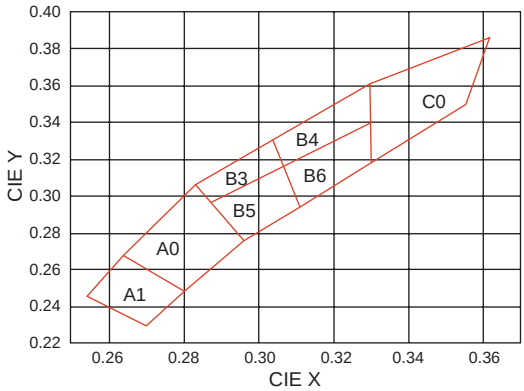

Forward Voltage

Unit : V

Groups	Code	Min.	Max.	Groups	Code	Min.	Max.
A, J, I, N	0	1.7	1.9	1	9	1.8	2.0
A, C, L, F, D, H, J, I, N, K	1	1.9	2.1	1	A	2.0	2.2
B, C, L, F, D, G, H, J, I, N, K, M, U	2	2.1	2.3	1	B	2.2	2.4
B, C, L, F, D, G, J, I, N, K, M, U	3	2.3	2.5		C	2.4	2.6
B, C, L, F, D, G, J, I, N, K, M, U	4	2.5	2.7		D	2.6	2.8
B, C, L, F, D, J, I, N, K, M, U	5	2.7	2.9	2, 3, 4, 5	E	2.8	3.0
B, C, L, F, D, J, I, N, K, M	6	2.9	3.1	2, 3, 4, 5	F	3.0	3.2
B, C, L, F, J, I, N, K, M	7	3.1	3.3	2, 3, 4, 5, 6	G	3.2	3.4
J, I, N, K, M	8	3.3	3.5	2, 3, 4, 5, 6	H	3.4	3.6
				4, 5, 6	J	3.6	3.8
				4, 5, 6	K	3.8	4.0
				6	L	4.0	4.2

LED LAMPs
BRIGHTNESS BIN SELECTION

Brightness Bin Selection

Unit : mcd

Item	Intensity Iv (mcd)	
Bin Code	Min.	Max.
a7	6.0	8.0
a6	8.0	10.0
a5	10.0	12.0
a4	12.0	15.0
a3	15.0	18.0
a2	18.0	22.0
a1	22.0	28.0
0	28.0	35.0
1	35.0	42.0
2	42.0	50.0
3	50.0	60.0
4	60.0	70.0
5	70.0	85.0
6	85.0	100
7	100	120
8	120	140
9	140	170
A	170	200
B	200	240
C	240	285
D	285	360
E	360	450
F	450	565
G	565	715
H	715	900
J	900	1,125
K	1,125	1,425
L	1,425	1,800
M	1,800	2,250
N	2,250	2,850
P	2,850	3,600
Q	3,600	4,500
R	4,500	5,650
S	5,650	7,150
T	7,150	9,000
U	9,000	11,250
V	11,250	14,250
W	14,250	18,000
X	18,000	22,500
Y	22,500	28,500
Z	28,500	36,000

Cool White / CIE Chromaticity Diagram

(I_F=20mA / Ta=25ºC)

Color Ranks		CIE			
A1	X	0.255	0.264	0.280	0.270
	Y	0.245	0.267	0.248	0.230
A0	X	0.264	0.283	0.296	0.280
	Y	0.267	0.305	0.267	0.248
B3	X	0.283	0.304	0.307	0.287
	Y	0.305	0.330	0.315	0.295
B4	X	0.304	0.330	0.330	0.307
	Y	0.330	0.360	0.339	0.315
B5	X	0.287	0.307	0.311	0.296
	Y	0.295	0.315	0.294	0.276
B6	X	0.307	0.330	0.330	0.311
	Y	0.315	0.339	0.318	0.294
C0	X	0.330	0.361	0.355	0.330
	Y	0.360	0.385	0.350	0.318

Note: Measurement uncertainty of the color coordinates ±0.01

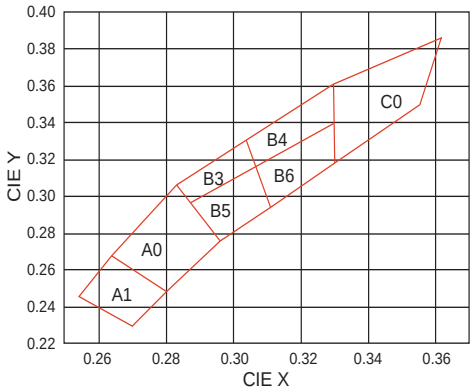

Warm White / CIE Chromaticity Diagram

(I_F=20mA / Ta=25ºC)

Color Ranks		CIE			
D1	X	0.357	0.361	0.398	0.389
	Y	0.361	0.385	0.411	0.382
D2	X	0.354	0.357	0.389	0.382
	Y	0.340	0.361	0.382	0.358
E1	X	0.389	0.398	0.439	0.425
	Y	0.382	0.411	0.431	0.400
E2	X	0.382	0.389	0.425	0.412
	Y	0.358	0.382	0.400	0.372
F1	X	0.425	0.439	0.497	0.477
	Y	0.400	0.431	0.466	0.413
F2	X	0.412	0.425	0.477	0.458
	Y	0.372	0.400	0.413	0.383

Note: Measurement uncertainty of the color coordinates ±0.01

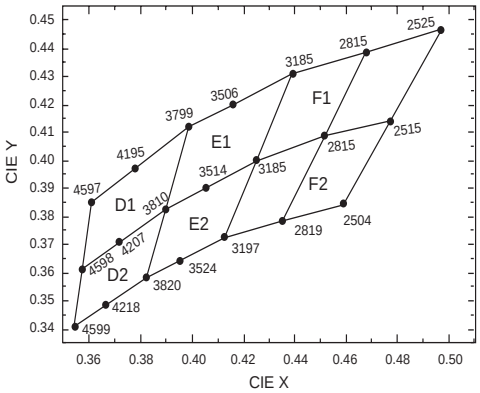

LED LAMPs (AUTOMOTIVE APPLICATION)
BRIGHTNESS BIN SELECTION

Cool White / CIE

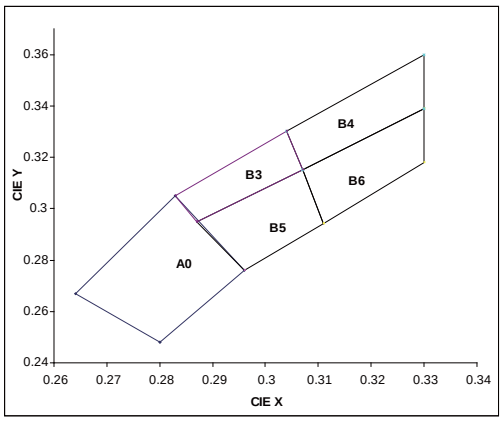

Bin Code of Chromaticity Coordinates

Rank	CIE_x	CIE_y	Rank	CIE_x	CIE_y
A0	0.280	0.248	A1	0.255	0.245
	0.264	0.267		0.264	0.267
	0.283	0.305		0.28	0.248
	0.296	0.276		0.27	0.23
B3	0.287	0.295	B4	0.307	0.315
	0.283	0.305		0.304	0.330
	0.304	0.330		0.330	0.360
	0.307	0.315		0.330	0.339
B5	0.296	0.276	B6	0.311	0.294
	0.287	0.295		0.307	0.315
	0.307	0.315		0.330	0.339
	0.311	0.294		0.330	0.318
C0	0.330	0.318			
	0.330	0.360			
	0.361	0.385			
	0.356	0.351			

Brightness Bin Selection

Item	Intensity Iv (mcd)	
Bin Code	Min.	Max.
a7	6.0	8.0
a6	8.0	10.0
a5	10.0	12.5
a4	12.5	15.0
a3	15.0	18.0
a2	18.0	22.0
a1	22.0	28.0
0	28.0	35.0
1	35.0	42.0
2	42.0	50.0
3	50.0	60.0
4	60.0	70.0
5	70.0	85.0
6	85.0	100
7	100	120
8	120	140
9	140	170
A	170	200
B	200	240
C	240	285
D	285	360
E	360	450
F	450	565
G	565	715
H	715	900
J	900	1,125
K	1,125	1,425
L	1,425	1,800
M	1,800	2,250
N	2,250	2,850
P	2,850	3,600
Q	3,600	4,500
R	4,500	5,650
S	5,650	7,150
T	7,150	9,000
U	9,000	11,250
V	11,250	14,250
W	14,250	18,000
X	18,000	22,500
Y	22,500	28,500
Z	28,500	36,000
Z1	36,000	43,200

Warm White / CIE

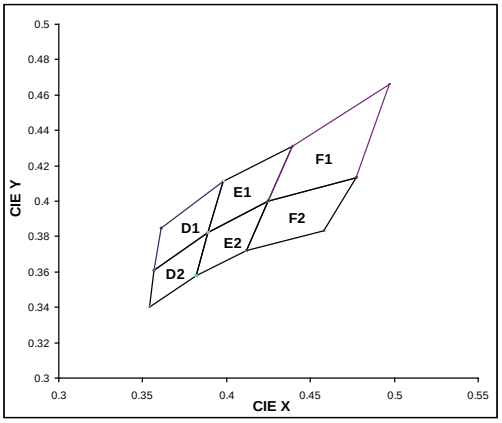

Bin Code of Chromaticity Coordinates

Rough Rank	Detailed Rank	CIE				
D1	D1-1	X	0.3575	0.3610	0.3780	0.3720
		Y	0.3612	0.3850	0.3970	0.3714
	D1-2	X	0.3720	0.3780	0.3988	0.3897
		Y	0.3714	0.3970	0.4116	0.3823
D2	D2-1	X	0.3545	0.3575	0.3720	0.3667
		Y	0.3408	0.3612	0.3714	0.3484
	D2-2	X	0.3667	0.3720	0.3897	0.3822
		Y	0.3484	0.3714	0.3823	0.3580
E1	E1-1	X	0.3897	0.3988	0.4162	0.4053
		Y	0.3823	0.4116	0.4200	0.3907
	E1-2	X	0.4053	0.4162	0.4390	0.4255
		Y	0.3907	0.4200	0.4310	0.4000
E2	E2-1	X	0.3822	0.3897	0.4053	0.3954
		Y	0.3580	0.3823	0.3907	0.3642
	E2-2	X	0.3954	0.4053	0.4255	0.4129
		Y	0.3642	0.3907	0.4000	0.3725
F1	F1-1	X	0.4250	0.4390	0.4550	0.4400
		Y	0.4000	0.4310	0.4350	0.4050
	F1-2	X	0.4400	0.4550	0.4770	0.4600
		Y	0.4050	0.4350	0.4400	0.4100
	F1-3	X	0.4600	0.4770	0.4970	0.4770
		Y	0.4100	0.4400	0.4470	0.4140
F2	F2-1	X	0.4130	0.4260	0.4400	0.4260
		Y	0.3730	0.4000	0.4050	0.3770
	F2-2	X	0.4260	0.4400	0.4600	0.4430
		Y	0.3770	0.4050	0.4100	0.3800
	F2-3	X	0.4430	0.4600	0.4770	0.4590
		Y	0.3800	0.4100	0.4140	0.3800

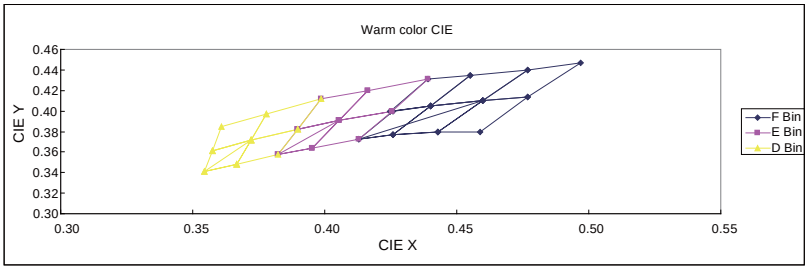

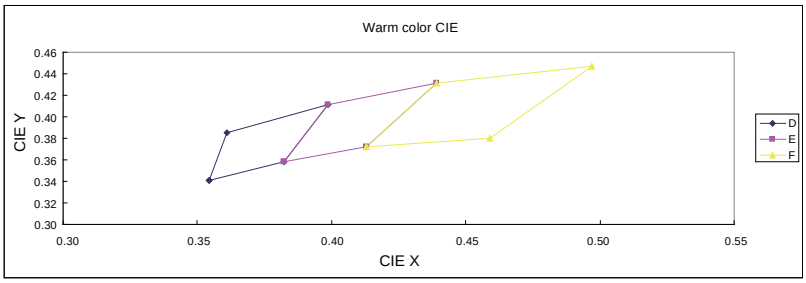

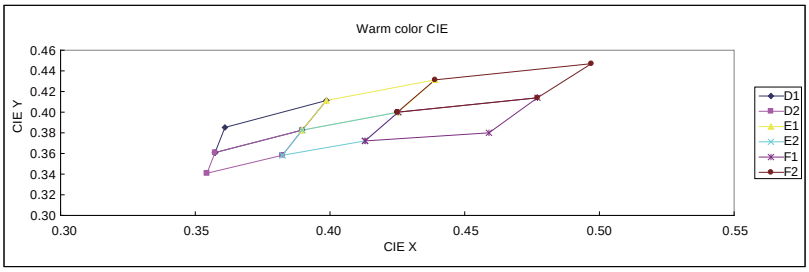

Rank		CIE_x	CIE_y
D	1	0.3545	0.3408
	2	0.3610	0.3850
	3	0.3988	0.4116
	4	0.3822	0.3580
E	1	0.3822	0.3580
	2	0.3988	0.4116
	3	0.4390	0.4310
	4	0.4129	0.3725
F	1	0.4129	0.3725
	2	0.4390	0.4310
	3	0.4970	0.4470
	4	0.4590	0.3800

Rank		CIE_x	CIE_y
D1	1	0.3575	0.3612
	2	0.3610	0.3850
	3	0.3988	0.4116
	4	0.3897	0.3823
D2	1	0.3545	0.3408
	2	0.3575	0.3612
	3	0.3897	0.3823
	4	0.3822	0.3580
E1	1	0.3897	0.3823
	2	0.3988	0.4116
	3	0.4390	0.4310
	4	0.4255	0.4000
E2	1	0.3822	0.3580
	2	0.3897	0.3823
	3	0.4255	0.4000
	4	0.4129	0.3725
F1	1	0.4129	0.3725
	2	0.4255	0.4000
	3	0.4770	0.4140
	4	0.4590	0.3800
F2	1	0.4250	0.4000
	2	0.4390	0.4310
	3	0.4970	0.4470
	4	0.4770	0.4140

DIGITAL DISPLAY
BRIGHTNESS BIN SELECTION

Bin Code	Brightness Range (µcd)	
	Min.	Max.
C	70	140
D	110	220
E	180	360
F	280	560
G	450	900
H	750	1200
J	1050	1680
K	1400	2300
L	2000	3200
M	2800	4500
N	4000	6400
P	5600	8900
Q	7800	12500
R	11000	17600
S	15000	24000
T	21000	34000
U	30000	48000
V	42000	67000
W	59000	94000
X	83000	133000
Y	116000	186000
Z	158800	254000

VISIBLE LED

38 HIGH POWER LED
44 LOW POWER LED
47 FLASH LED
50 SMD LED
93 SUPER FLUX LED
95 LED LAMPs
117 LED DIGITAL DISPLAYs

High Power LED ❙ HV (1W, 2W, 4W) PRELIMINARY

1W

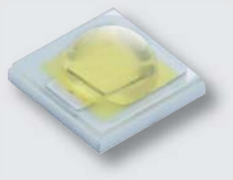

UNIT : mm

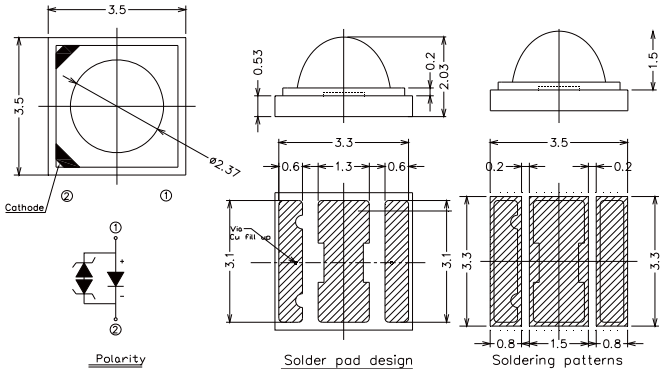

Category	Color	CCT (K)	Minimum Luminous Flux (lm)	CRI_Min	Forward Current (mA)	Forward Voltage	Efficacy (lm/W)	Viewing Angle (°)
1W LED	○ Cool White	5700	80	70	20	47-55 VDC	>90	120
1W LED	○ Warm White	3000	70	80	20	47-55 VDC	>70	120

2W, 4W

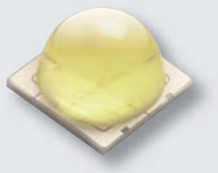

UNIT : mm

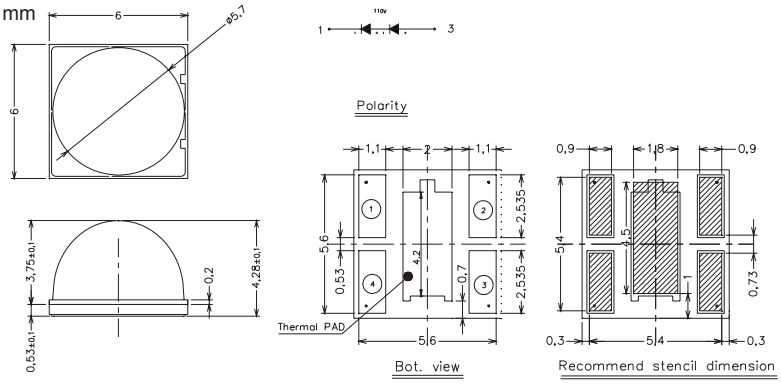

Category	Color	CCT (K)	Minimum Luminous Flux (lm)	CRI_Min	Forward Current (mA)	Forward Voltage	Efficacy (lm/W)	Viewing Angle (°)
2W LED	○ Warm White	2700	120	80	20	95-111 VDC	>67	120
4W LED	○ Cool White	5700	325	70	20	190-220 VDC	>85	120
4W LED	○ Warm White	3000	250	80	20	190-220 VDC	>60	120
4W LED	○ Cool White	5700	325	70	40	95-111 VDC	>85	120
4W LED	○ Warm White	3000	250	80	40	95-111 VDC	>60	120

• Product Availability : Please visit Everlight website for more updated information (www.everlight.com) or contact Everlight sales for regional options.

High Power LED ❙ Shuen (1W, 3W)

UNIT : mm

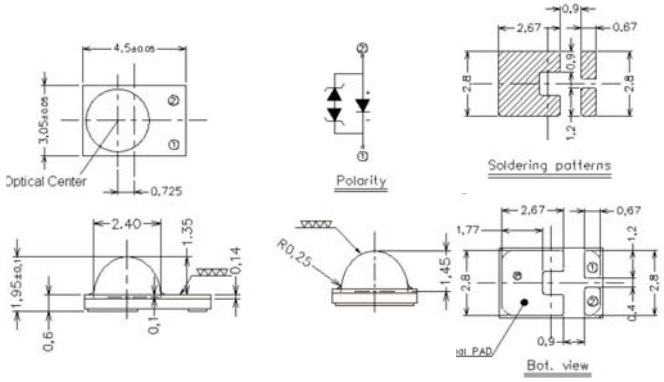

1W / 350mA

Product	Size (LXWXHmm)	Color	CCT (K)	Min.Luminous Flux (lm)	CRI (min.)	Forward Voltage (V)
ELSH-F81C1-0LPGS-C6500	3.05x4.5x1.95	Cool White	6500	80	70	2.95~3.85
ELSH-F91C1-0LPGS-C6500	3.05x4.5x1.95	Cool White	6500	90	70	2.95~3.85
ELSH-J11C1-0CPGS-C6500	3.05x4.5x1.95	Cool White	6500	100	70	2.95~3.85
ELSH-J21C1-0VPGS-C6500	3.05x4.5x1.95	Cool White	6500	110	70	2.95~3.85
*ELSH-J31C1-*****-C6500	3.05x4.5x1.95	Cool White	6500	120	70	2.95~3.85
ELSH-F81C1-0LPGS-C5700	3.05x4.5x1.95	Cool White	5700	80	70	2.95~3.85
ELSH-F91C1-0LPGS-C5700	3.05x4.5x1.95	Cool White	5700	90	70	2.95~3.85
ELSH-J11C1-0CPGS-C5700	3.05x4.5x1.95	Cool White	5700	100	70	2.95~3.85
ELSH-J21C1-0VPGS-C5700	3.05x4.5x1.95	Cool White	5700	110	70	2.95~3.85
*ELSH-J31C1-*****-C5700	3.05x4.5x1.95	Cool White	5700	120	70	2.95~3.85
ELSH-F81C1-0LPGS-C5000	3.05x4.5x1.95	Cool White	5000	80	70	2.95~3.85
ELSH-F91C1-0CPGS-C5000	3.05x4.5x1.95	Cool White	5000	90	70	2.95~3.85
ELSH-J11C1-0VPGS-C5000	3.05x4.5x1.95	Cool White	5000	100	70	2.95~3.85
ELSH-F81N1-0LPGS-C4500	3.05x4.5x1.95	Cool White	4500	80	75	2.95~3.85
ELSH-F91N1-0CPGS-C4500	3.05x4.5x1.95	Cool White	4500	90	75	2.95~3.85
ELSH-J11N1-0VPGS-C4500	3.05x4.5x1.95	Cool White	4500	100	75	2.95~3.85
ELSH-F71N1-0LPGS-C4000	3.05x4.5x1.95	Neutral White	4000	70	75	2.95~3.85
ELSH-F81N1-0LPGS-C4000	3.05x4.5x1.95	Neutral White	4000	80	75	2.95~3.85
ELSH-F91N1-0CPGS-C4000	3.05x4.5x1.95	Neutral White	4000	90	75	2.95~3.85
ELSH-J11N1-0VPGS-C4000	3.05x4.5x1.95	Neutral White	4000	100	75	2.95~3.85
ELSH-F81N1-0VPHS-C4000	3.05x4.5x1.95	Neutral White	4000	80	80	2.95~3.85
*ELSH-F91N1-*****-C4000	3.05x4.5x1.95	Neutral White	4000	90	80	2.95~3.85
ELSH-F81M1-0CPGS-C3500	3.05x4.5x1.95	Warm White	3500	80	75	2.95~3.85
ELSH-F91M1-0VPGS-C3500	3.05x4.5x1.95	Warm White	3500	90	75	2.95~3.85
ELSH-F71M1-0CPHS-C3500	3.05x4.5x1.95	Warm White	3500	70	80	2.95~3.85
ELSH-F61M1-0LPGS-C3000	3.05x4.5x1.95	Warm White	3000	60	75	2.95~3.85
ELSH-F71M1-0LPGS-C3000	3.05x4.5x1.95	Warm White	3000	70	75	2.95~3.85
ELSH-F81M1-0CPGS-C3000	3.05x4.5x1.95	Warm White	3000	80	75	2.95~3.85
ELSH-F91M1-0VPGS-C3000	3.05x4.5x1.95	Warm White	3000	90	75	2.95~3.85
ELSH-F71M1-0CPHS-C3000	3.05x4.5x1.95	Warm White	3000	70	80	2.95~3.85
ELSH-F81M1-0VPHS-C3000	3.05x4.5x1.95	Warm White	3000	80	80	2.95~3.85
*ELSH-F91M1-*****-C3000	3.05x4.5x1.95	Warm White	3000	90	80	2.95~3.85
ELSH-F61M1-0LPGS-C2700	3.05x4.5x1.95	Warm White	2700	60	75	2.95~3.85
ELSH-F71M1-0CPGS-C2700	3.05x4.5x1.95	Warm White	2700	70	75	2.95~3.85
*ELSH-F81M1-*****-C2700	3.05x4.5x1.95	Warm White	2700	80	75	2.95~3.85
ELSH-F91M1-0VPGS-C2700	3.05x4.5x1.95	Warm White	2700	90	75	2.95~3.85
ELSH-F61M1-0CPHS-C2700	3.05x4.5x1.95	Warm White	2700	60	80	2.95~3.85
ELSH-F81M1-0VPHS-C2700	3.05x4.5x1.95	Warm White	2700	80	80	2.95~3.85
*ELSH-F91M1-*****-C2700	3.05x4.5x1.95	Warm White	2700	90	80	2.95~3.85

Star mark * : Engineering samples only

High Power LED ❙ Shuen (1W, 3W)

1W / 350mA

Product	Size (LXWXHmm)	Color	Wavelength (nm)	Min.Luminous Flux (lm)	CRI (min.)	Forward Voltage (V)
ELSH-F41R1-0LPNM-AR5R6	3.05x4.5x1.95	Red	620~630	45	--	1.75~2.95
ELSH-F51R1-0LPNM-AR5R6	3.05x4.5x1.95	Red	620~630	52	--	1.75~2.95
ELSH-F61R1-0LPNM-AR5R6	3.05x4.5x1.95	Red	620~630	60	--	1.75~2.95
ELSH-F41O1-0LPNM-AR3R4	3.05x4.5x1.95	Orange	610~620	45	--	1.75~2.95
ELSH-F51O1-0LPNM-AR3R4	3.05x4.5x1.95	Orange	610~620	52	--	1.75~2.95
ELSH-F61O1-0LPNM-AR3R4	3.05x4.5x1.95	Orange	610~620	60	--	1.75~2.95
ELSH-F31Y1-0LPNM-AA3A5	3.05x4.5x1.95	Amber	585~592.5	39	--	1.75~2.95
ELSH-F41Y1-0LPNM-AA3A5	3.05x4.5x1.95	Amber	585~592.5	45	--	1.75~2.95
*ELSH-F51Y1-*****-AA3A5	3.05x4.5x1.95	Amber	585~592.5	52	--	1.75~2.95
ELSH-F31Y1-0LPNM-AA4A6	3.05x4.5x1.95	Amber	587.5~595	39	--	1.75~2.95
ELSH-F41Y1-0LPNM-AA4A6	3.05x4.5x1.95	Amber	587.5~595	45	--	1.75~2.95
*ELSH-F51Y1-*****-AA4A6	3.05x4.5x1.95	Amber	587.5~595	52	--	1.75~2.95
ELSH-F71G1-0LPNM-CG1G2	3.05x4.5x1.95	Green	520~530	70	--	2.95~3.85
ELSH-F71G1-0LPNM-CG2G3	3.05x4.5x1.95	Green	525~535	70	--	2.95~3.85
ELSH-E61B1-0LPNM-CB7B8	3.05x4.5x1.95	Blue	460~470	13	--	2.95~3.85
ELSH-E71B1-0LPNM-CB7B8	3.05x4.5x1.95	Blue	460~470	17	--	2.95~3.85
ELSH-Q91L1-0LPNM-CB5B6	3.05x4.5x1.95	Royal Blue	Wp 450~460	275 mW	--	2.95~3.85
ELSH-Q91E1-0LPNM-JD3D8	3.05x4.5x1.95	Deep Red	Wp 645-675	275 mW	--	2.05~2.95
ELSH-Q61F1-0LPNM-JF3F8	3.05x4.5x1.95	Far Red	Wp 715~745	125 mW	--	2.05~2.95

3W / 700mA

Product	Size (LXWXHmm)	Color	Wavelength (nm) / CCT (K)	Min.Luminous Flux (lm)	CRI (min.)	Forward Voltage (V)
ELSH-J61C3-0LPGS-D6500	3.05x4.5x1.95	Cool White	6500 K	150	70	3.25-4.15
ELSH-J71C3-0CPGS-D6500	3.05x4.5x1.95	Cool White	6500 K	160	70	3.25-4.15
ELSH-J61C3-0LPGS-D5700	3.05x4.5x1.95	Cool White	5700 K	150	70	3.25-4.15
ELSH-J71C3-0CPGS-D5700	3.05x4.5x1.95	Cool White	5700 K	160	70	3.25-4.15
ELSH-J51C3-0LPGS-D5000	3.05x4.5x1.95	Cool White	5000 K	140	70	3.25-4.15
ELSH-J61C3-0CPGS-D5000	3.05x4.5x1.95	Cool White	5000 K	150	70	3.25-4.15
ELSH-J41N3-0LPGS-D4500	3.05x4.5x1.95	Cool White	4500 K	130	75	3.25-4.15
ELSH-J51N3-0CPGS-D4500	3.05x4.5x1.95	Cool White	4500 K	140	75	3.25-4.15
ELSH-J31N3-0LPGS-D4000	3.05x4.5x1.95	Cool White	4000 K	120	75	3.25-4.15
ELSH-J41N3-0CPGS-D4000	3.05x4.5x1.95	Cool White	4000 K	130	75	3.25-4.15
ELSH-J21M3-0LPGS-D3500	3.05x4.5x1.95	Warm White	3500 K	110	75	3.25-4.15
ELSH-J31M3-0CPGS-D3500	3.05x4.5x1.95	Warm White	3500 K	120	75	3.25-4.15
ELSH-J21M3-0LPGS-D3000	3.05x4.5x1.95	Warm White	3000 K	110	75	3.25-4.15
ELSH-J31M3-0CPGS-D3000	3.05x4.5x1.95	Warm White	3000 K	120	75	3.25-4.15
ELSH-J21M3-0CPHS-D3000	3.05x4.5x1.95	Warm White	3000 K	110	80	3.25-4.15
ELSH-J21M3-0LPGS-D2700	3.05x4.5x1.95	Warm White	2700 K	110	75	3.25-4.15
ELSH-J31M3-0CPGS-D2700	3.05x4.5x1.95	Warm White	2700 K	120	75	3.25-4.15
ELSH-J21M3-0CPHS-D2700	3.05x4.5x1.95	Warm White	2700 K	110	80	3.25-4.15
ELSH-F81R3-0LPNM-BR4R6	3.05x4.5x1.95	Red	615-630 nm	80	--	2.05-2.95
ELSH-F91R3-0LPNM-BR4R6	3.05x4.5x1.95	Red	615-630 nm	90	--	2.05-2.95
ELSH-F81Y3-0LPNM-BA3A5	3.05x4.5x1.95	Amber	585-592.5 nm	80	--	2.05-2.95
*ELSH-F91Y3-*****-BA3A5	3.05x4.5x1.95	Amber	585-592.5 nm	90	--	2.05-2.95
ELSH-F91G3-0LPNM-DG1G3	3.05x4.5x1.95	Green	520-535 nm	90	--	3.25-4.15
ELSH-J11G3-0LPNM-DG1G3	3.05x4.5x1.95	Green	520-535 nm	100	--	3.25-4.15
ELSH-E81B3-0LPNM-DB6B8	3.05x4.5x1.95	Blue	455-470 nm	20	--	3.25-4.15
ELSH-E91B3-0LPNM-DB6B8	3.05x4.5x1.95	Blue	455-470 nm	23	--	3.25-4.15

Star mark * : Engineering samples only

High Power LED ❙ Shwo (1W, 3W)

UNIT : mm

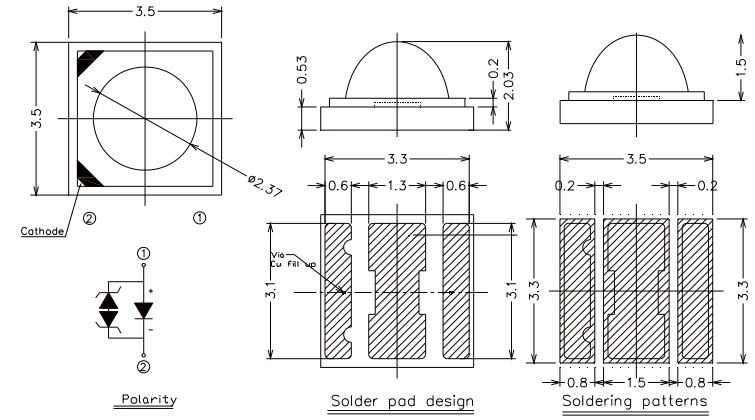

1W / 350mA

Product	Size (LXWXHmm)	Color	CCT (K)	Min.Luminous Flux (lm)	CRI (min.)	Forward Voltage (V)
ELSW-F81C1-0LPGS-C6500	3.5x3.5x2.03	Cool White	6500	80	70	2.95~3.85
ELSW-F91C1-0LPGS-C6500	3.5x3.5x2.03	Cool White	6500	90	70	2.95~3.85
ELSW-J11C1-0CPGS-C6500	3.5x3.5x2.03	Cool White	6500	100	70	2.95~3.85
ELSW-J21C1-0VPGS-C6500	3.5x3.5x2.03	Cool White	6500	110	70	2.95~3.85
*ELSW-J31C1-*****-C6500	3.5x3.5x2.03	Cool White	6500	120	70	2.95~3.85
ELSW-F81C1-0LPGS-C5700	3.5x3.5x2.03	Cool White	5700	80	70	2.95~3.85
ELSW-F91C1-0LPGS-C5700	3.5x3.5x2.03	Cool White	5700	90	70	2.95~3.85
ELSW-J11C1-0CPGS-C5700	3.5x3.5x2.03	Cool White	5700	100	70	2.95~3.85
ELSW-J21C1-0VPGS-C5700	3.5x3.5x2.03	Cool White	5700	110	70	2.95~3.85
*ELSW-J31C1-*****-C5700	3.5x3.5x2.03	Cool White	5700	120	70	2.95~3.85
ELSW-F91C1-0CPGS-C5000	3.5x3.5x2.03	Cool White	5000	90	70	2.95~3.85
ELSW-J11C1-0VPGS-C5000	3.5x3.5x2.03	Cool White	5000	100	70	2.95~3.85
ELSW-F91N1-0CPGS-C4500	3.5x3.5x2.03	Neutral White	4500	90	75	2.95~3.85
ELSW-J11N1-0VPGS-C4500	3.5x3.5x2.03	Neutral White	4500	100	75	2.95~3.85
ELSW-F71N1-0LPGS-C4000	3.5x3.5x2.03	Neutral White	4000	70	75	2.95~3.85
ELSW-F81N1-0LPGS-C4000	3.5x3.5x2.03	Neutral White	4000	80	75	2.95~3.85
ELSW-F91N1-0CPGS-C4000	3.5x3.5x2.03	Neutral White	4000	90	75	2.95~3.85
ELSW-J11N1-0VPGS-C4000	3.5x3.5x2.03	Neutral White	4000	100	75	2.95~3.85
ELSW-F81N1-0VPHS-C4000	3.5x3.5x2.03	Neutral White	4000	80	80	2.95~3.85
*ELSW-F91N1-*****-C4000	3.5x3.5x2.03	Neutral White	4000	90	80	2.95~3.85
ELSW-F81M1-0CPGS-C3500	3.5x3.5x2.03	Warm White	3500	80	75	2.95~3.85
ELSW-F91M1-0VPGS-C3500	3.5x3.5x2.03	Warm White	3500	90	75	2.95~3.85
ELSW-F71M1-0CPHS-C3500	3.5x3.5x2.03	Warm White	3500	70	80	2.95~3.85
ELSW-F61M1-0LPGS-C3000	3.5x3.5x2.03	Warm White	3000	60	75	2.95~3.85
ELSW-F71M1-0LPGS-C3000	3.5x3.5x2.03	Warm White	3000	70	75	2.95~3.85
ELSW-F81M1-0CPGS-C3000	3.5x3.5x2.03	Warm White	3000	80	75	2.95~3.85
ELSW-F91M1-0VPGS-C3000	3.5x3.5x2.03	Warm White	3000	90	75	2.95~3.85
ELSW-F71M1-0CPHS-C3000	3.5x3.5x2.03	Warm White	3000	70	80	2.95~3.85
ELSW-F81M1-0VPHS-C3000	3.5x3.5x2.03	Warm White	3000	80	80	2.95~3.85
*ELSW-F91M1-*****-C3000	3.5x3.5x2.03	Warm White	3000	90	80	2.95~3.85
ELSW-F61M1-0LPGS-C2700	3.5x3.5x2.03	Warm White	2700	60	75	2.95~3.85
ELSW-F71M1-0CPGS-C2700	3.5x3.5x2.03	Warm White	2700	70	75	2.95~3.85
*ELSW-F81M1-*****-C2700	3.5x3.5x2.03	Warm White	2700	80	75	2.95~3.85
ELSW-F91M1-0VPGS-C2700	3.5x3.5x2.03	Warm White	2700	90	75	2.95~3.85
ELSW-F61M1-0CPHS-C2700	3.5x3.5x2.03	Warm White	2700	60	80	2.95~3.85
ELSW-F81M1-0VPHS-C2700	3.5x3.5x2.03	Warm White	2700	80	80	2.95~3.85
*ELSW-F91M1-*****-C2700	3.5x3.5x2.03	Warm White	2700	90	80	2.95~3.85

Star mark * : Engineering samples only

High Power LED ❙ Shwo (1W, 3W)

1W / 350mA

Product	Size (LXWXHmm)	Color	Wavelength (nm)	Min.Luminous Flux (lm)	CRI (min.)	Forward Voltage (V)
ELSW-F51R1-0LPNM-AR5R6	3.5x3.5x2.03	Red	620-630	52	--	1.75-2.65
ELSW-F61R1-0LPNM-AR5R6	3.5x3.5x2.03	Red	620-630	60	--	1.75-2.65
ELSW-F51O1-0LPNM-AR3R4	3.5x3.5x2.03	Orange	610-620	52	--	1.75-2.65
ELSW-F61O1-0LPNM-AR3R4	3.5x3.5x2.03	Orange	610-620	60	--	1.75-2.65
ELSW-F41Y1-0LPNM-AA3A5	3.5x3.5x2.03	Amber	585-592.5	45	--	1.75-2.65
*ELSW-F51Y1-*****-AA3A5	3.5x3.5x2.03	Amber	585-592.5	52	--	1.75-2.65
ELSW-F71G1-0LPNM-CG1G2	3.5x3.5x2.03	Green	520-530	70	--	2.95~3.85
ELSW-F71G1-0LPNM-CG2G	3.5x3.5x2.03	Green	525-535	70	--	2.95~3.85
ELSW-E61B1-0LPNM-CB7B8	3.5x3.5x2.03	Blue	460-470	13	--	2.95~3.85
ELSW-E71B1-0LPNM-CB7B8	3.5x3.5x2.03	Blue	460-470	17	--	2.95~3.85

3W / 700mA

Product	Size (LXWXHmm)	Color	Wavelength (nm) / CCT (K)	Min.Luminous Flux (lm)	CRI (min.)	Forward Voltage (V)
ELSW-J61C3-0LPGS-D6500	3.5x3.5x2.03	Cool White	6500 K	150	70	3.25~4.15
ELSW-J71C3-0CPGS-D6500	3.5x3.5x2.03	Cool White	6500 K	160	70	3.25~4.15
ELSW-J61C3-0LPGS-D5700	3.5x3.5x2.03	Cool White	5700 K	150	70	3.25~4.15
ELSW-J71C3-0CPGS-D5700	3.5x3.5x2.03	Cool White	5700 K	160	70	3.25~4.15
ELSW-J51C3-0LPGS-D5000	3.5x3.5x2.03	Cool White	5000 K	140	70	3.25-4.15
ELSW-J61C3-0CPGS-D5000	3.5x3.5x2.03	Cool White	5000 K	150	70	3.25-4.15
ELSW-J41N3-0LPGS-D4500	3.5x3.5x2.03	Neutral White	4500 K	130	75	3.25-4.15
ELSW-J51N3-0CPGS-D4500	3.5x3.5x2.03	Neutral White	4500 K	140	75	3.25-4.15
ELSW-J31N3-0LPGS-D4000	3.5x3.5x2.03	Neutral White	4000 K	120	75	3.25-4.15
ELSW-J41N3-0CPGS-D4000	3.5x3.5x2.03	Neutral White	4000 K	130	75	3.25-4.15
ELSW-J21M3-0LPGS-D3500	3.5x3.5x2.03	Warm White	3500 K	110	75	3.25~4.15
ELSW-J31M3-0CPGS-D3500	3.5x3.5x2.03	Warm White	3500 K	120	75	3.25~4.15
ELSW-J21M3-0LPGS-D3000	3.5x3.5x2.03	Warm White	3000 K	110	75	3.25~4.15
ELSW-J31M3-0CPGS-D3000	3.5x3.5x2.03	Warm White	3000 K	120	75	3.25~4.15
ELSW-J21M3-0CPHS-D3000	3.5x3.5x2.03	Warm White	3000 K	110	80	3.25-4.15
ELSW-J21M3-0LPGS-D2700	3.5x3.5x2.03	Warm White	2700 K	110	75	3.25~4.15
ELSW-J31M3-0CPGS-D2700	3.5x3.5x2.03	Warm White	2700 K	120	75	3.25~4.15
ELSW-J21M3-0CPHS-D2700	3.5x3.5x2.03	Warm White	2700 K	110	80	3.25-4.15
ELSW-F81R3-0LPNM-BR4R6	3.5x3.5x2.03	Red	615-630 nm	80	--	2.05-2.95
ELSW-F91R3-0LPNM-BR4R6	3.5x3.5x2.03	Red	615-630 nm	90	--	2.05-2.95
ELSW-F81Y3-0LPNM-BA3A5	3.5x3.5x2.03	Amber	585-592.5 nm	80	--	2.05-2.95
*ELSW-F91Y3-*****-BA3A5	3.5x3.5x2.03	Amber	585-592.5 nm	90	--	2.05-2.95
ELSW-F91G3-0LPNM-DG1G3	3.5x3.5x2.03	Green	520-535 nm	90	--	3.25-4.15
ELSW-J11G3-0LPNM-DG1G3	3.5x3.5x2.03	Green	520-535 nm	100	--	3.25-4.15
ELSW-E81B3-0LPNM-DB6B8	3.5x3.5x2.03	Blue	455-470	20	--	3.25-4.15
ELSW-E91B3-0LPNM-DB6B8	3.5x3.5x2.03	Blue	455-470	23	--	3.25-4.15

Star mark * : Engineering samples only

High Power LED ❙ Yi (5W)

UNIT : mm

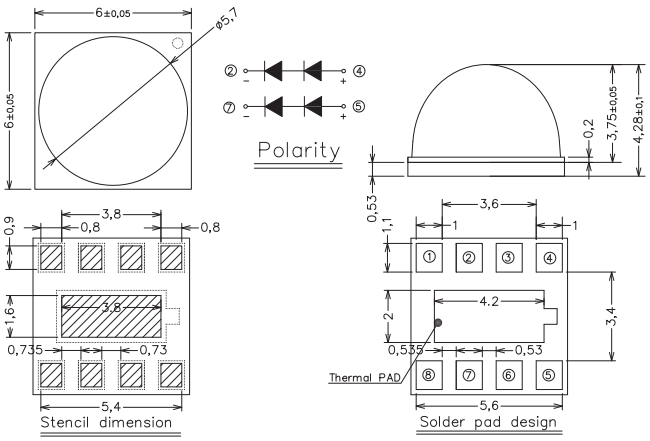

Product	Size (LXWXHmm)	Color	CCT (K)	Typ.Luminous Flux (lm)	CRI (min.)	Forward Voltage (V)
ELYI-K72C5-0LPGS-P6500	6.0x6.0x4.28	○ Cool White	6500	375	75ra	Vf: 6.0~8.0
ELYI-K72C5-0LPGS-P5700	6.0x6.0x4.28	○ Cool White	5700	375	75ra	Vf: 6.0~8.0
ELYI-K42M5-0LPGS-P3000	6.0x6.0x4.28	○ Warm White	3000	300	80ra	Vf: 6.0~8.0

High Power LED ❙ A09K (0.5W)

UNIT : mm

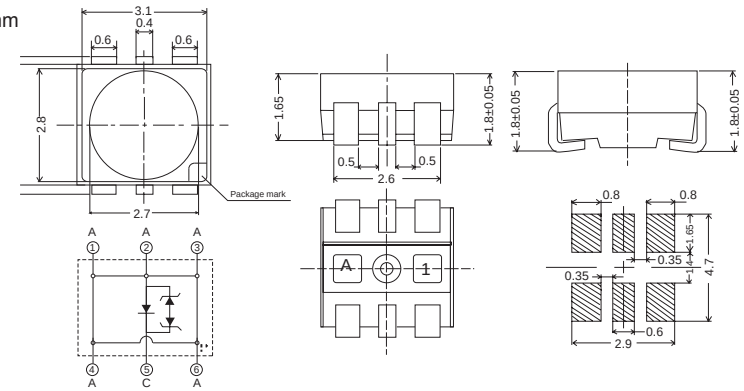

Product	Size (LXWXHmm)	Color	Iv (mcd)	Wavelength (nm) / CCT (K)	V_F (V)	Viewing Angle (°)
EHP-A09K-S5TC-S3000CADAE1K-1T8-AM	3.4x3.3x1.75	● Red	2800~5600	616~625 nm	1.7~3.2	120
EHP-A09K-Y8TC-E9000BBDAE1K-1T8-AM	3.4x3.3x1.75	● Yellow	2240~5600	586~595 nm	1.7~3.2	120
EHP-A09K-BRTT-5670HDBEBD9K-1T8-AM	3.4x3.3x1.75	○ Cool White	5600~11200	5650~7000 K	2.75~4.25	120

Low Power LED ❙ 45-21 Series (0.06W)

UNIT : mm

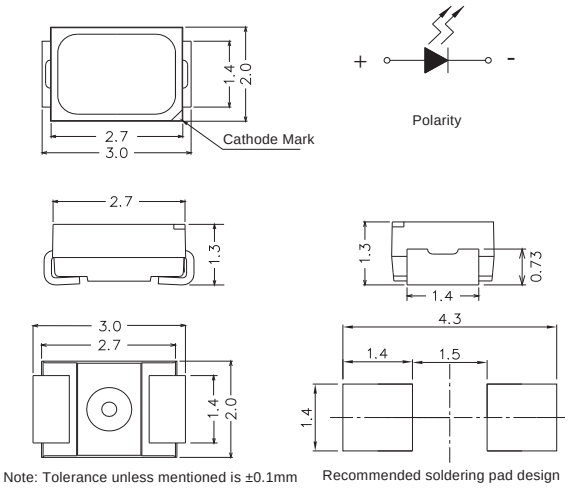

Product	Size (LXWXHmm)	Color	CCT (K)	Typ. Luminous Flux (lm) @ 20mA	CRI (min.)	Forward Voltage (V)
45-21/LK2C-B56702C4CB2/2T	3.0x2.0x1.3	Cool White	5650~7000	6.8	70	2.9~3.6
45-21/LK2C-B50634C6CB2/2T	3.0x2.0x1.3	Cool White	5000~6300	7.4	70	2.9~3.6
45-21/LK2C-B45562C4CB2/2T	3.0x2.0x1.3	Cool White	4500~5650	6.8	70	2.9~3.6
45-21/LK2C-B38452C4CB2/2T	3.0x2.0x1.3	Warm White	3800~4500	6.8	70	2.9~3.6
45-21/LK2C-B2832AC2CB2/2T	3.0x2.0x1.3	Warm White	2850~3250	6.2	70	2.9~3.6
45-21/QK2C-B56702C4CB41/2T	3.0x2.0x1.3	Cool White	5650~7000	6.8	75	2.9~3.4
45-21/QK2C-B50632C4CB2/2T	3.0x2.0x1.3	Cool White	5000~6300	6.8	75	2.9~3.6
45-21/QK2C-B45562C4CB2/2T	3.0x2.0x1.3	Cool White	4500~5650	6.8	75	2.9~3.6
45-21/QK2C-B3845AC2CB2/2T	3.0x2.0x1.3	Warm White	3800~4500	6.2	75	2.9~3.6
45-21/QK2C-B2832AC2CB2/2T	3.0x2.0x1.3	Warm White	2850~3250	6.2	75	2.9~3.6
45-21/KK2C-S30308BACB41/2T	3.0x2.0x1.3	Warm White	3000	5.6	80	2.9~3.6
45-21/KK2C-S4040AC4CB41/2T	3.0x2.0x1.3	Warm White	4000	6.2	80	2.9~3.6

Low Power LED I 67-21 Series (0.06W)

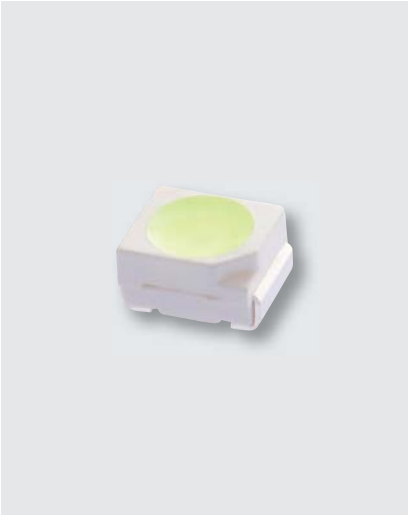

UNIT : mm

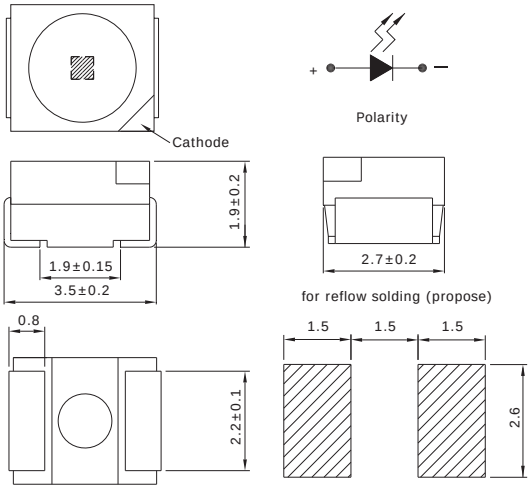

Note: Tolerance unless mentioned is ±0.1mm

Product	Size (LXWXHmm)	Color	CCT (K)	Typ. Luminous Flux (lm) @ 20mA	CRI (min.)	Forward Voltage (V)
67-21/LK2C-B56704C6CB2/2T	3.5x2.8x1.9	Cool White	5650~7000	7.4	70	2.9~3.6
67-21/LK2C-B50634C6CB2/2T	3.5x2.8x1.9	Cool White	5000~6300	7.4	70	2.9~3.6
67-21/LK2C-B45564C6CB2/2T	3.5x2.8x1.9	Cool White	4500~5650	7.4	70	2.9~3.6
67-21/LK2C-B38454C6CB2/2T	3.5x2.8x1.9	Warm White	3800~4500	7.4	70	2.9~3.6
67-21/LK2C-B28322C4CB2/2T	3.5x2.8x1.9	Warm White	2850~3250	6.8	70	2.9~3.6
67-21/QK2C-B56702C4CB2/2T	3.5x2.8x1.9	Cool White	5650~7000	6.8	75	2.9~3.6
67-21/QK2C-B50632C4CB2/2T	3.5x2.8x1.9	Cool White	5000~6300	6.8	75	2.9~3.6
67-21/QK2C-B45562C4CB2/2T	3.5x2.8x1.9	Cool White	4500~5650	6.8	75	2.9~3.6
67-21/QK2C-B38452C4CB2/2T	3.5x2.8x1.9	Warm White	3800~4500	6.8	75	2.9~3.6
67-21/QK2C-B28322C4CB2/2T	3.5x2.8x1.9	Warm White	2850~3250	6.8	75	2.9~3.6
67-21/KK2C-S3030AC2CB2/2T	3.5x2.8x1.9	Warm White	3000	6.2	80	2.9~3.6
67-21/KK2C-S4040AC2CB2/2T	3.5x2.8x1.9	Warm White	4000	6.2	80	2.9~3.6

Low Power LED I 61-238 Series (0.2W)

UNIT : mm

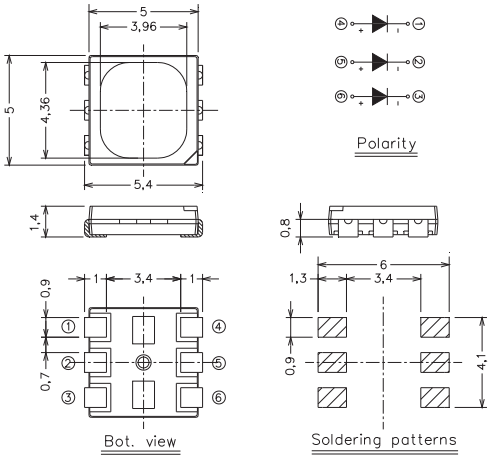

Note: The tolerances unless mentioned is ±0.1mm

Product	Size (LXWXHmm)	Color	CCT (K)	Typ. Luminous Flux (lm) @ 60mA	CRI (min.)	Forward Voltage (V)
61-238/LK2C-B56706F4GB2/ET	5.0x5.0x1.5	Cool White	5650~7000	18.6	70	2.9~3.6
61-238/LK2C-B50638F6GB2/ET	5.0x5.0x1.5	Cool White	5000~6300	19.2	70	2.9~3.6
61-238/LK2C-B45568F6GB2/ET	5.0x5.0x1.5	Cool White	4500~5650	19.2	70	2.9~3.6
61-238/LK2C-B28322FAGB2/ET	5.0x5.0x1.5	Warm White	2850~3250	17.0	70	2.9~3.6
61-238/QK2C-B50632FAGB2/ET	5.0x5.0x1.5	Cool White	5000~6300	17.0	75	2.9~3.6
61-238/QK2C-B45562FAGB2/ET	5.0x5.0x1.5	Cool White	4500~5650	17.0	75	2.9~3.6
61-238/QK2C-B28322FAGB2/ET	5.0x5.0x1.5	Warm White	2850~3250	17.0	75	2.9~3.6
61-238/KK2C-S30306F4GB2/ET	5.0x5.0x1.5	Cool White	3000	18.6	80	2.9~3.6
61-238/KK2C-S40408F6GB2/ET	5.0x5.0x1.5	Cool White	4000	19.2	80	2.9~3.6

Low Power LED I 62-227B Series (0.4W)

UNIT : mm

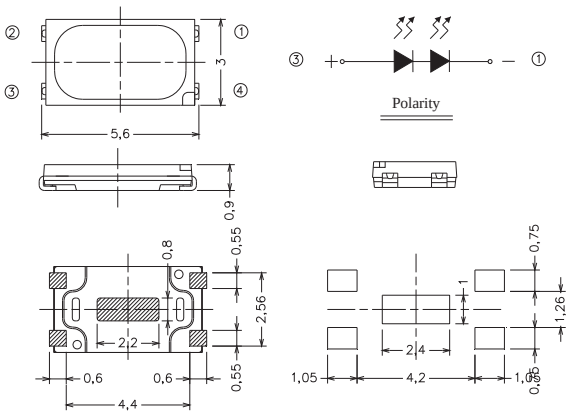

Product	Size (LXWXHmm)	Color	CCT (K)	Typ. Luminous Flux (lm) @ 60mA	CRI (min.)	Forward Voltage (V)
62-227B/LK2C-N3030N4P3S2Z6/2T	5.6x3.0x0.9	Warm White	3000	33	70	5.8~7.0
62-227B/LK2C-N4040N4P3S2Z6/2T	5.6x3.0x0.9	Warm White	4000	35	70	5.8~7.0
62-227B/KK2C-N3030N4P3S2Z6/2T	5.6x3.0x0.9	Warm White	3000	31	80	5.8~7.0
62-227B/KK2C-N4040N4P3S2Z6/2T	5.6x3.0x0.9	Warm White	4000	33	80	5.8~7.0

Flash LED ❙ High Power Flash LED ❙ 2016 Package

UNIT : mm

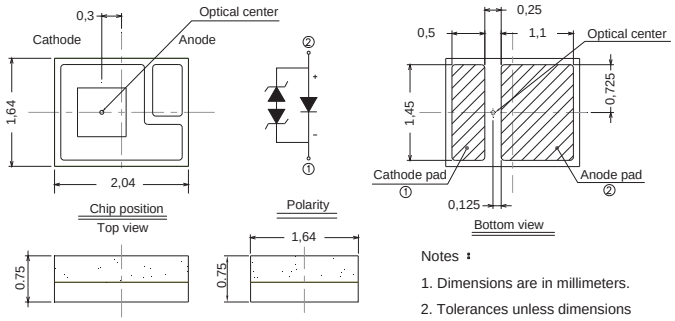

Notes :

1. Dimensions are in millimeters.
2. Tolerances unless dimensions ±0.1mm.

Product	Size (LXWXHmm)	Color	CCT (K)	Typ.Luminous Flux (lm)	Forward Voltage (V)	I_F (mA)
EHP-C04/NT01A-P01/TR	2.04x1.64x0.75	○White	4500~7000	160	2.95~4.35	1000

UNIT : mm

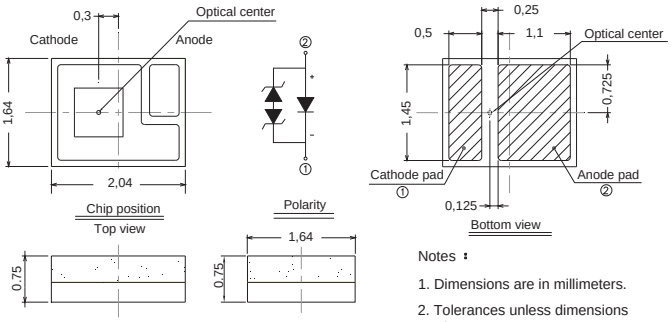

Notes :

1. Dimensions are in millimeters.
2. Tolerances unless dimensions ±0.1mm.

Product	Size (LXWXHmm)	Color	CCT (K)	Typ.Luminous Flux (lm)	Forward Voltage (V)	I_F (mA)
EHP-C04/NT01H-P01/TR	2.04x1.64x0.75	○White	4500~7000	80	2.95~4.35	500

Flash LED ❙ High Power Flash LED ❙ 2016 Package

UNIT : mm

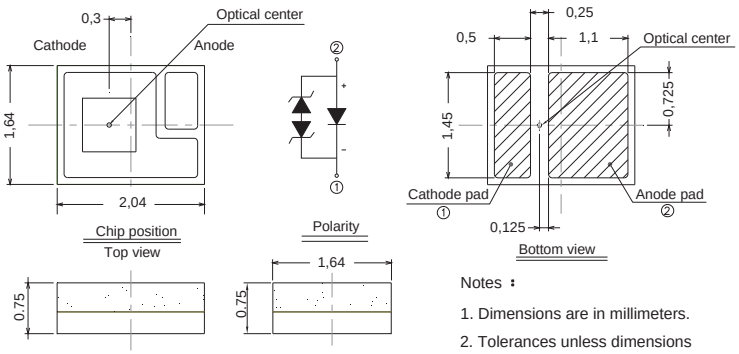

Notes :

1. Dimensions are in millimeters.
2. Tolerances unless dimensions ±0.1mm.

Product	Size (LXWXHmm)	Color	CCT (K)	Typ.Luminous Flux (lm)	Forward Voltage (V)	I_F (mA)
ELCH06/BJ4J6Z10-N0	2.04x1.64x0.75	❍White	4500~7000	200	2.95~4.35	1000

Flash LED ❙ High Power Flash LED ❙ 3333 Package

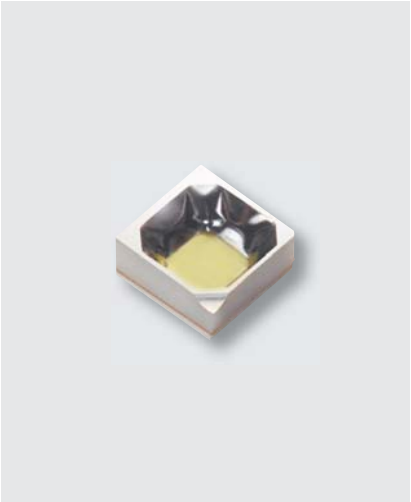

UNIT : mm

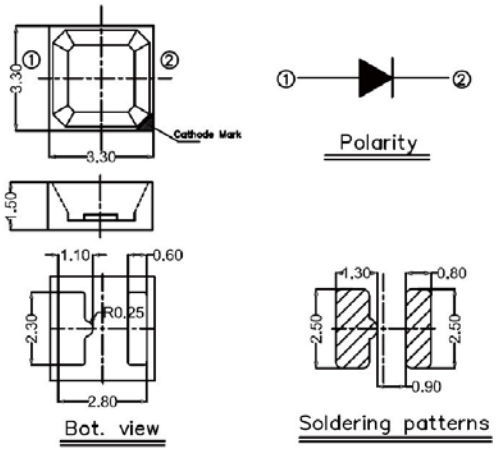

Product	Size (LXWXHmm)	Color	CCT (K)	Typ.Luminous Flux (lm)	Forward Voltage (V)	I_F (mA)
EHP-69/GT01C-P01/TR	3.3x3.3x1.5	❍White	4500~7000	100	2.95~4.15	500

Flash LED ❙ Low Power Flash LED ❙ Triple Dice

UNIT : mm

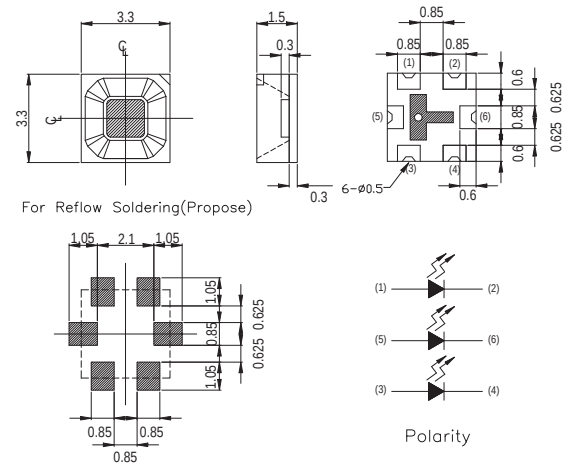

Note: The tolerances unless dimension are ± 0.1mm.

Product	Size (LXWXHmm)	Color	CCT (K)	Typ. Luminous Intensity (cd)	Forward Voltage (V)	I_F (mA)
69-23BUMD/TR8	3.3x3.3x1.5	White	5000~7000	11	2.7~3.7	20 for each die

Flash LED ❙ Low Power Flash LED ❙ Four Dice

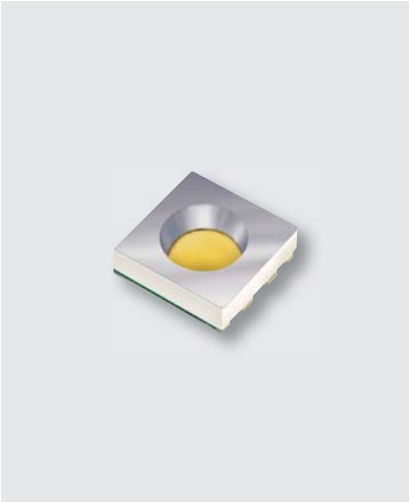

UNIT : mm

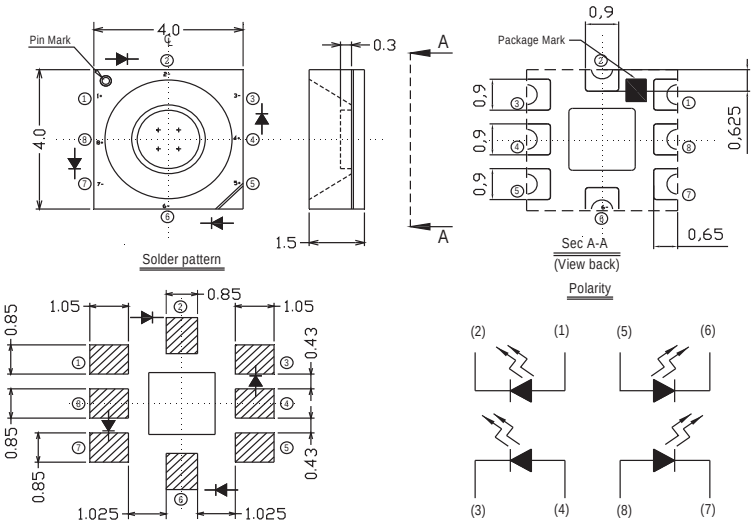

Product	Size (LXWXHmm)	Color	CCT (K)	Typ. Luminous Intensity (cd)	Forward Voltage (V)	I_F (mA)
59-146UTD/TR8	4x4x1.5	White	4500~7000	8.5~11~15	2.8~3.7	20mA for each die

SMD LED ❙ Subminiature LED Lamps (Leadframe)

UNIT : mm

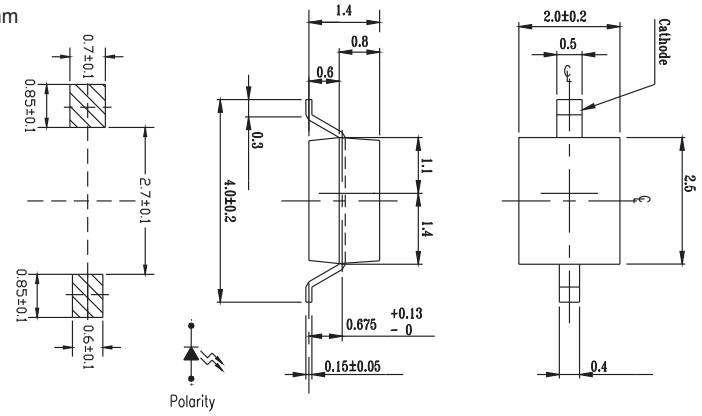

Product	Size (LXWXHmm)	Color	λ_d (nm)/ CIE(x,y)	I_V Min./Typ. (mcd)	I_V Max. (mcd)	V_F Min. (V)	V_F Typ. (V)	V_F Max. (V)	I_F (mA)
28-21SDRC/S530-A3/TR8	2.5x2.0x1.4	Deep Red	639	20 / 27	N	1.7	2	2.4	20
28-21SURC/S530-A2/TR8	2.5x2.0x1.4	Hyper Red	624	11 / 26	N	N	2	2.4	20
28-21UYC/S530-A3/TR8	2.5x2.0x1.4	Super Yellow	589	21 / 33	N	N	2	2.4	20

UNIT : mm

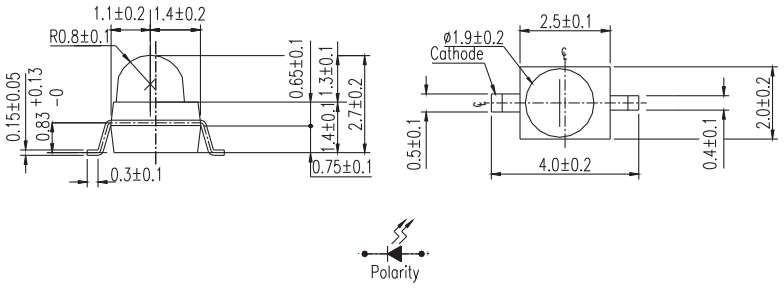

Product	Size (LXWXHmm)	Color	λ_d (nm)/ CIE(x,y)	I_V Min./Typ. (mcd)	I_V Max. (mcd)	V_F Min. (V)	V_F Typ. (V)	V_F Max. (V)	I_F (mA)
91-21SUBC/S400-A4/TR7	2.0x2.5x2.7	Super Blue	470	400 / 500	N	N	3.5	4.3	20
91-21SUGC/S400-A4/TR7	2.0x2.5x2.7	Super Green	525	2000 / 2300	N	N	3.5	4.3	20
91-21SURC/S530-A6/TR7	2.0x2.5x2.7	Hyper Red	624	802 / 1232	N	N	2	2.4	20
91-21SYGC/S530-E4/TR7	2.0x2.5x2.7	Super Yellow Green	573	528 / 594	N	N	2	2.4	20
91-21UBC/C430/TR7	2.0x2.5x2.7	Blue	466	160 / 203	N	N	3.8	4.5	20
91-21USRC/S530-A4/TR7	2.0x2.5x2.7	Dark Red	631	344 / 578	N	N	2	2.4	20

SMD LED ❙ Subminiature LED Lamps (Leadframe)

UNIT : mm

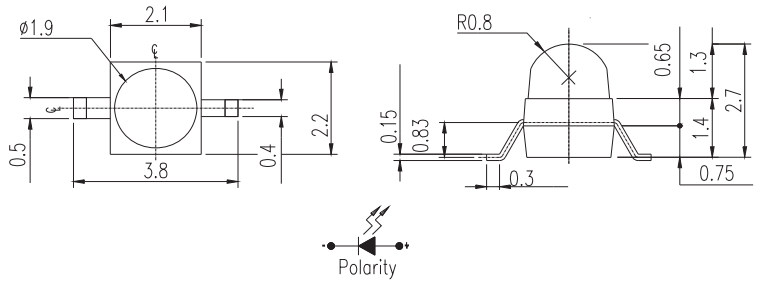

Product	Size (LXWXHmm)	Color	λ_d (nm)/ CIE(x,y)	I_V Min./Typ. (mcd)	I_V Max. (mcd)	V_F Min. (V)	V_F Typ. (V)	V_F Max. (V)	I_F (mA)
95-21SUGC/S400-A4/TR7	2.1x 2.2x2.7	Super Green	525	2000 / 2300	N	N	3.5	4.3	20
95-21SYGC/S530-E2/TR7	2.1x 2.0x2.7	Brilliant Yellow Green	573	264 / 330	N	1.7	2	2.4	20
95-21USRD/S357/TR7	2.1x 2.2x2.7	Dark Red	631	45 / 100	N	N	2	2.4	20
95-21UYC/S530-A5/TR7	2.1x 2.2x2.7	Super Yellow	589	793 / 1156	N	N	2	2.4	20

UNIT : mm

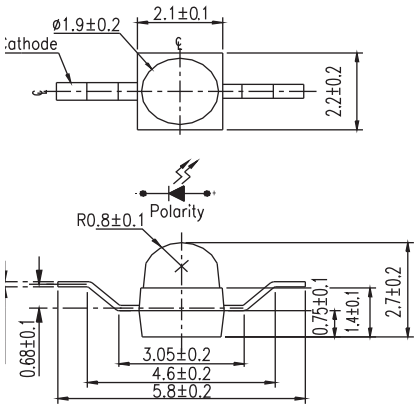

95-21F10/TR10

Product	Size (LXWXHmm)	Color	λ_d (nm)/ CIE(x,y)	I_V Min./Typ. (mcd)	I_V Max. (mcd)	V_F Min. (V)	V_F Typ. (V)	V_F Max. (V)	I_F (mA)
95-21SDRC/S530-A3/TR10	2.1x 2.2x2.7	Brilliant Red	639	330 / 495	N	1.7	2	2.4	20
95-21SUBC/S400-A5/TR10	2.1x 2.2x2.7	Super Blue	470	500 / 800	N	N	3.5	4.3	20

SMD LED ❙ Surface Mount Chip LED (PCB) ❙ Top View LED

UNIT : mm

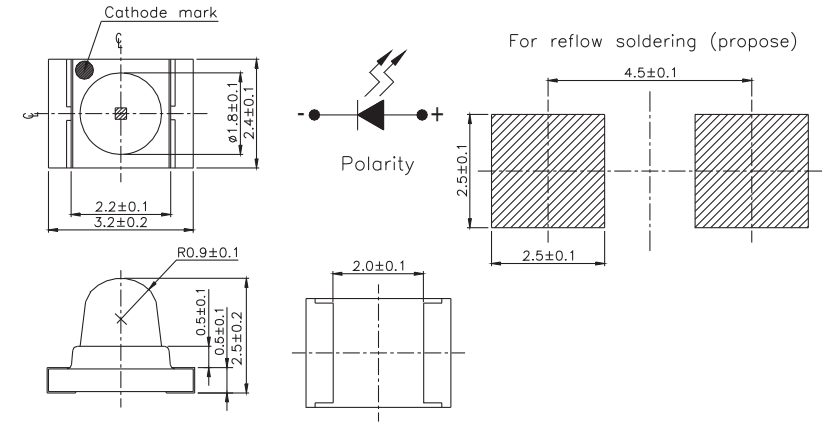

Product	Size (LXWXHmm)	Color	λ_d (nm)/ CIE(x,y)	I_V Min./Typ. (mcd)	I_V Max. (mcd)	V_F Min./Typ. (V)	V_F Max. (V)	I_F (mA)
42-21/BHC-AUW/1T	3.2x2.4x2.5	● Blue	470	450	1800	2.7 / 3.3	3.7	20

UNIT : mm

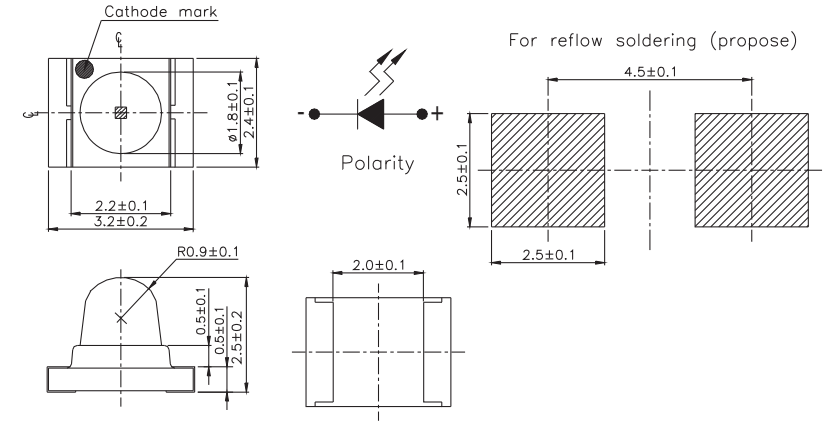

Product	Size (LXWXHmm)	Color	λ_d (nm)/ CIE(x,y)	I_V Min./Typ. (mcd)	I_V Max. (mcd)	V_F Min./Typ. (V)	V_F Max. (V)	I_F (mA)
42-21A/BHC-ZV1W2N/1T	3.2x2.4x2.5	● Blue	470	715	1800	2.65	3.75	20
42-21A/GHC-YX1Y2N/1T	3.2x2.4x2.5	● Brilliant Green	525	1800	4500	2.7	3.7	20

SMD LED ❙ Surface Mount Chip LED (PCB) ❙ Top View 0402 (0.2T~0.5T)

UNIT : mm

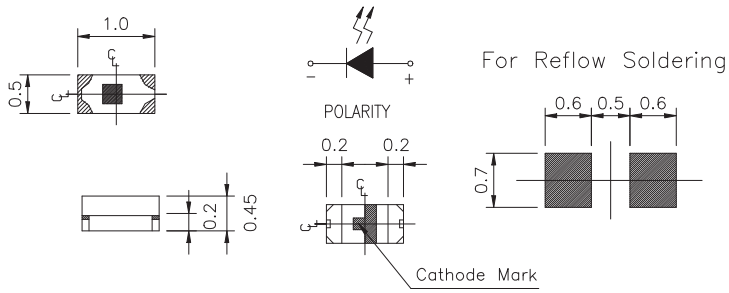

Product	Size (LXWXHmm)	Color	λ_d (nm)/CIE(x,y)	I_V Min./Typ. (mcd)	I_V Max. (mcd)	V_F Min./ Typ. (V)	V_F Max. (V)	I_F (mA)
16-213/BHC-AN1P2/3T	1.0x0.5x0.45	● Blue	470	28.5	72	2.7 / 3.3	3.7	20
16-213/BHC-ZL1M2QY/3T	1.0x0.5x0.45	● Blue	470	11.5	28.5	2.7	3.2	5
16-213/GHC-YR1S1/3T	1.0x0.5x0.45	● Brilliant Green	525	112	225	2.7 / 3.3	3.7	20
16-213/R6C-A2225VZ/3T	1.0x0.5x0.45	● Brilliant Red	624	20	40.5	1.7	2.2	10
16-213/T3D-AP1Q2QY/3T	1.0x0.5x0.45	○ Pure White	x=0.29 y=0.30	45	112	2.7	3.2	5
16-213/T7D-AQ1R1QY/3T	1.0x0.5x0.45	○ Pure White	x=0.29 y=0.30	72	140	2.7	3.2	5

UNIT : mm

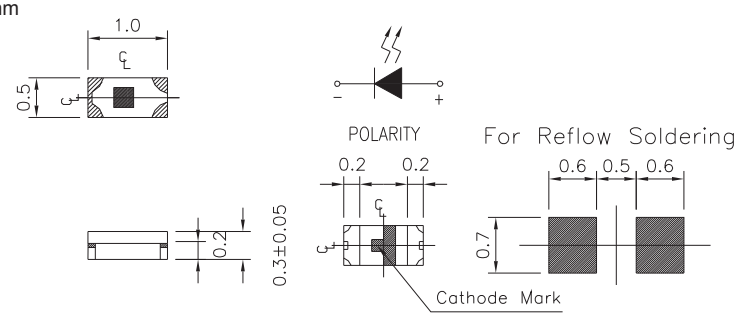

Product	Size (LXWXHmm)	Color	λ_d (nm)/CIE(x,y)	I_V Min./Typ. (mcd)	I_V Max. (mcd)	V_F Min./Typ. (V)	V_F Max. (V)	I_F (mA)
16-216/T3D-AQ1R2TY/3T	1.0x0.5x0.3	○ Pure White	x=0.29 y=0.30	72	180	2.6	3	5

UNIT : mm

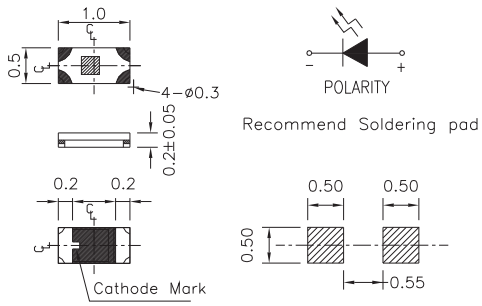

Product	Size (LXWXHmm)	Color	λ_d (nm)/CIE(x,y)	I_V Min./Typ. (mcd)	I_V Max. (mcd)	V_F Min./Typ. (V)	VF Max. (V)	I_F (mA)
16-219A/T2D-AR2T1QY/3T	1.0x0.5x0.2	○ Pure White	x=0.29 y=0.30	140	360	2.7	3.2	5

SMD LED ❙ Surface Mount Chip LED (PCB) ❙ Top View 0603 (0.2T~0.8T)

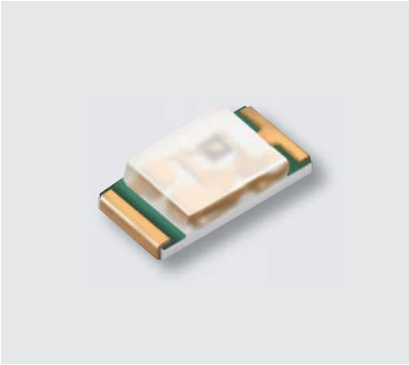

UNIT : mm

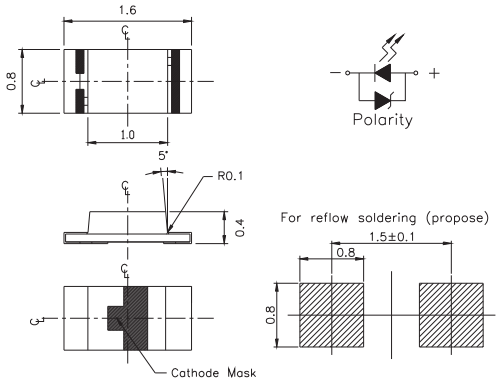

Product	Size (LXWXHmm)	Color	λ_d (nm)/CIE(x,y)	I_V Min./Typ. (mcd)	I_V Max. (mcd)	V_F Min./Typ. (V)	V_F Max. (V)	I_F (mA)
19-117/BHC-YJ2K2TX/3T	1.6x0.8x0.4	● Blue	470	5.8	11.5	2.6	3	2
19-117/BHC-ZL1M2RY/3T	1.6x0.8x0.4	● Blue	470	11.5	28.5	2.5	3.1	5
19-117/T1D-AP2Q2QY/3T	1.6x0.8x0.4	○ Pure White	x=0.274 y=0.226	57	112	2.7	3.2	5

UNIT : mm

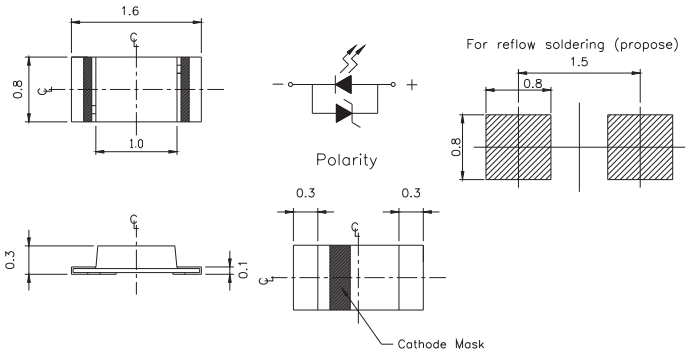

Product	Size (LXWXHmm)	Color	λ_d (nm)/CIE(x,y)	I_V Min./Typ. (mcd)	I_V Max. (mcd)	V_F Min./Typ. (V)	V_F Max. (V)	I_F (mA)
19-118/BHC-ZL1M2QY/3T	1.6x0.8x0.3	● Blue	470	11.5	28.5	2.7	3.2	5

SMD LED ❙ Surface Mount Chip LED (PCB) ❙ Top View 0603 (0.2T~0.8T)

UNIT : mm

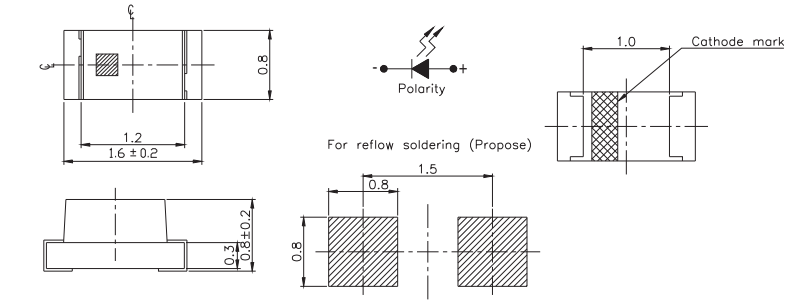

Product	Size (LXWXHmm)	Color	λ_d (nm)/CIE(x,y)	I_V Min./Typ. (mcd)	I_V Max. (mcd)	V_F Min./ Typ. (V)	V_F Max. (V)	I_F (mA)
19-21/B6C-AP2Q2M/3T	1.6x0.8x0.8	Blue	470	57	112	2.75	3.95	20
19-21/BHC-AP1Q2/3T	1.6x0.8x0.8	Blue	470	45	112	2.7 / 3.3	3.7	20
19-21/BHC-YL1M1RY/3T	1.6x0.8x0.8	Blue	470	11.5	22.5	2.5	3.1	5
19-21/BHC-ZQ1R2N/3T	1.6x0.8x0.8	Blue	470	72	180	2.7	3.7	20
19-21/G6C-AL1M2LY/3T	1.6x0.8x0.8	Brilliant Yellow Green	573	11.5	28.5	1.7	2.3	5
19-21/G6C-FM1N2B/3T	1.6x0.8x0.8	Brilliant Yellow Green	573	18	45	1.75	2.35	20
19-21/G6C-FP1Q1L/3T	1.6x0.8x0.8	Brilliant Yellow Green	573	45	90	1.7	2.3	20
19-21/GHC-YN1P2QY/3T	1.6x0.8x0.8	Brilliant Green	525	28.5	72	2.7	3.2	5
19-21/GPC-FL1M2B/3T	1.6x0.8x0.8	Green	562	11.5	28.5	1.75	2.35	20
19-21/R6C-AL2N1VY/3T	1.6x0.8x0.8	Brilliant Red	624	14.5	36	1.7	2.2	5
19-21/R6C-FP1Q2L/3T	1.6x0.8x0.8	Brilliant Red	624	45	112	1.7	2.3	20
19-21/R7C-AK1L2BY/3T	1.6x0.8x0.8	Deep Red	631	7.2	18	1.75	2.35	5
19-21/R7C-AN2Q1B/3T	1.6x0.8x0.8	Deep Red	631	36	90	1.75	2.35	20
19-21/R8C-FN2Q1L/3T	1.6x0.8x0.8	Deep Red	639	36	90	1.7	2.3	20
19-21/S2C-AL2M2VY/3T	1.6x0.8x0.8	BrilliantOrange	605	14.5	28.5	1.7	2.2	5
19-21/S2C-AQ1R2B/3T	1.6x0.8x0.8	BrilliantOrange	605	72	180	1.75	2.35	20
19-21/T1D-ANPHY/3T	1.6x0.8x0.8	Pure White	x=0.274 y=0.226	28.5	72	2.7	3.15	5
19-21/T1D-CPQTY/3T	1.6x0.8x0.8	Pure White	x=0.274 y=0.226	45	112	2.6	3	5
19-21/W1D-ANPHY/3T	1.6x0.8x0.8	Pure White	x=0.274 y=0.226	28.5	72	2.7	3.15	5
19-21/Y2C-AL1M2VY/3T	1.6x0.8x0.8	Brilliant Yellow	589	11.5	28.5	1.7	2.2	5
19-21/Y2C-CP1Q2B/3T	1.6x0.8x0.8	Brilliant Yellow	589	45	112	1.75	2.35	20

SMD LED ❙ Surface Mount Chip LED (PCB) ❙ Top View 0603 (0.2T~0.8T)

UNIT : mm

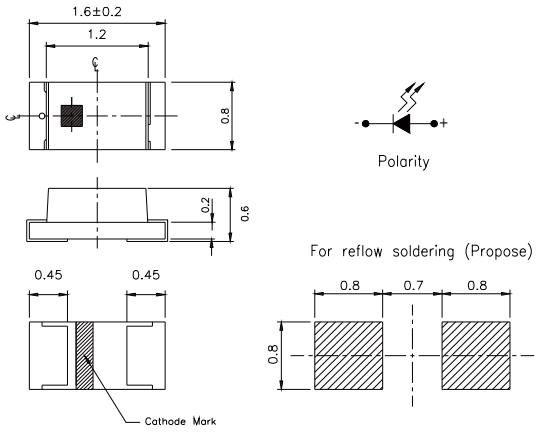

Product	Size (LXWXHmm)	Color	λ_d (nm)/CIE(x,y)	I_V Min./Typ. (mcd)	I_V Max. (mcd)	V_F Min./Typ. (V)	V_F Max. (V)	I_F (mA)
19-213A/T1D-CP2Q2HY/3T	1.6x0.8x0.6	○Pure White	x=0.274 y=0.226	57	112	2.7	3.15	5

UNIT : mm

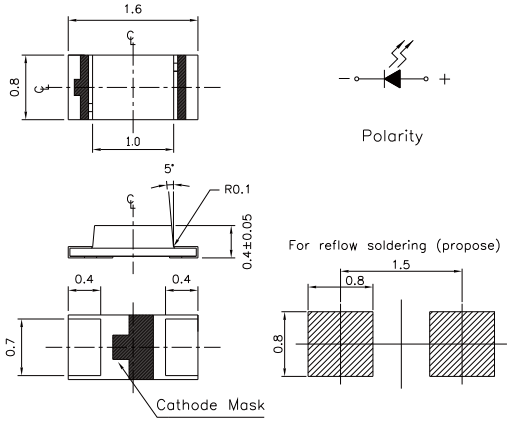

Product	Size (LXWXH mm)	Color	λ_d (nm)/CIE(x,y)	I_V Min./Typ. (mcd)	I_V Max. (mcd)	V_F Min./ Typ. (V)	V_F Max. (V)	I_F (mA)
19-217/B9C-ANQE/3T	1.6x0.8x0.4	●Blue	470	28.5	112	2.75	3.65	20
19-217/BHC-AN1P2/3T	1.6x0.8x0.4	●Blue	470	28.5	72	2.7 / 3.3	3.7	20
19-217/BHC-XK1L2B11X/3T	1.6x0.8x0.4	●Blue	470	7.2	18	2.6	2.9	2
19-217/BHC-YL2M2TY/3T	1.6x0.8x0.4	●Blue	470	14.5	28.5	2.6	3	5
19-217/G7C-AL1M2B/3T	1.6x0.8x0.4	●Brilliant Yellow Green	573	11.5	28.5	1.75	2.35	20
19-217/GHC-YR1S2/3T	1.6x0.8x0.4	●Brilliant Green	525	112	285	2.7 / 3.3	3.7	20
19-217/R6C-P1Q2/3T	1.6x0.8x0.4	●Brilliant Red	624	45	112	1.7/2	2.4	20
19-217/S2C-AL1M2VY/3T	1.6x0.8x0.4	●Brilliant Orange	605	11.5	28.5	1.7	2.2	5
19-217/S3C-AL2N1VY/3T	1.6x0.8x0.4	●Reddish Orange	615	14.5	36	1.7	2.2	5
19-217/T1D-ANPHY/3T	1.6x0.8x0.4	○Pure White	x=0.274 y=0.226	28.5	72	2.7	3.15	5
19-217/T1D-JP1Q2QY/3T	1.6x0.8x0.4	○Pure White	x=0.274 y=0.226	45	112	2.7	3.2	5
19-217/T7D-CS2T2B2/3T	1.6x0.8x0.4	○Pure White	x=0.274 y=0.226	225	450	2.9	3.6	20
19-217/W1D-CPQTY/3T	1.6x0.8x0.4	○Pure White	x=0.274 y=0.226	45	112	2.6	3	5
19-217/Y5C-AM1N1VY/3T	1.6x0.8x0.4	●Brilliant Yellow	589	16	40	1.65	2.25	5
19-217/Y5C-APQB/3T	1.6x0.8x0.4	●Brilliant Yellow	589	45	112	1.75	2.35	20
19-217/Y5C-AQ2R2/3T	1.6x0.8x0.4	●Brilliant Yellow	589	90	180	1.7/2	2.4	20

SMD LED ❙ Surface Mount Chip LED (PCB) ❙ Top View 0603 (0.2T~0.8T)

UNIT : mm

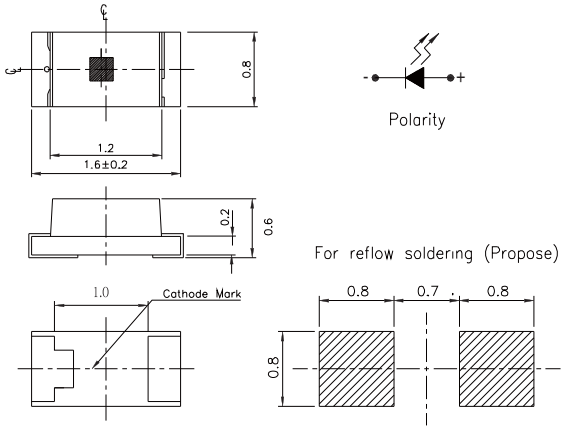

Product	Size (LXWXHmm)	Color	λ_d (nm)/CIE(x,y)	I_V Min./Typ. (mcd)	I_V Max. (mcd)	V_F Min./ Typ. (V)	V_F Max. (V)	I_F (mA)
19-213 /Y2C-CQ1R2/3T	1.6x0.8x0.6	Brilliant Yellow	589	72	180	1.7 / 2	2.4	20
19-213/B7C-AQ2S1B2/3T	1.6x0.8x0.6	Blue	470	90	225	2.9	3.6	20
19-213/BHC-AN1P2/3T	1.6x0.8x0.6	Blue	470	28.5	72	2.7 / 3.3	3.7	20
19-213/G6C-AP1Q2/3T	1.6x0.8x0.6	Brilliant Yellow Green	573	45	112	2	2.4	20
19-213/G6C-BM1N2B/3T	1.6x0.8x0.6	Brilliant Yellow Green	573	18	45	1.75	2.35	20
19-213/G6C-FN2Q1L/3T	1.6x0.8x0.6	Brilliant Yellow Green	573	36	90	1.7	2.3	20
19-213/G6W-FN1P1B/3T	1.6x0.8x0.6	Brilliant Yellow Green	573	28.5	57	1.75	2.35	20
19-213/GHC-XS1T1N/3T	1.6x0.8x0.6	Brilliant Green	525	180	360	2.7	3.7	20
19-213/GHC-YP1Q2QY/3T	1.6x0.8x0.6	Brilliant Green	525	45	112	2.7	3.2	5
19-213/GHC-YR1S2/3T	1.6x0.8x0.6	Brilliant Green	525	112	285	3.5	4	20
19-213/R6C-AM2P1VY/3T	1.6x0.8x0.6	Brilliant Red	624	22.5	57	1.7	2.2	5
19-213/R6C-AN1P2/3T	1.6x0.8x0.6	Brilliant Red	624	28.5	72	1.7/2	2.4	20
19-213/R6C-AN2Q1B/3T	1.6x0.8x0.6	Brilliant Red	624	36	90	1.75	2.35	20
19-213/R6C-AP1Q2B/3T	1.6x0.8x0.6	Brilliant Red	624	45	112	1.75	2.35	20
19-213/R6C-AQ1R2B/3T	1.6x0.8x0.6	Brilliant Red	624	72	180	1.75	2.35	20
19-213/R8C-FN1P2/3T	1.6x0.8x0.6	Deep Red	639	28.5	72	1.7 / 2	2.4	20
19-213/S2C-AN1P2B/3T	1.6x0.8x0.6	Brilliant Orange	605	28.5	72	1.75	2.35	20
19-213/S3C-AN2P2B/3T	1.6x0.8x0.6	Reddish Orange	615	36	72	1.75	2.35	20
19-213/T1D-ANPHY/3T	1.6x0.8x0.6	Pure White	x=0.274 y=0.226	28.5	72	2.7	3.15	5
19-213/Y2C-AP1Q2B/3T	1.6x0.8x0.6	Brilliant Yellow	589	45	112	1.75	2.35	20
19-213/Y2C-CN1P2/3T	1.6x0.8x0.6	Brilliant Yellow	589	28.5	72	1.7 / 2	2.4	20
19-213/Y2C-CP1Q2L/3T	1.6x0.8x0.6	Brilliant Yellow	589	45	112	1.7	2.3	20
19-213/Y2C-CQ2R2L/3T	1.6x0.8x0.6	Brilliant Yellow	589	90	180	1.7	2.3	20

SMD LED ❙ Surface Mount Chip LED (PCB) ❙ Top View 0603 (0.2T~0.8T)

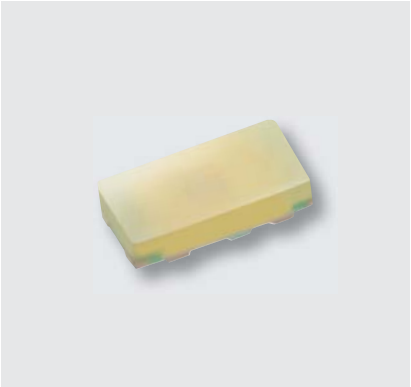

UNIT : mm

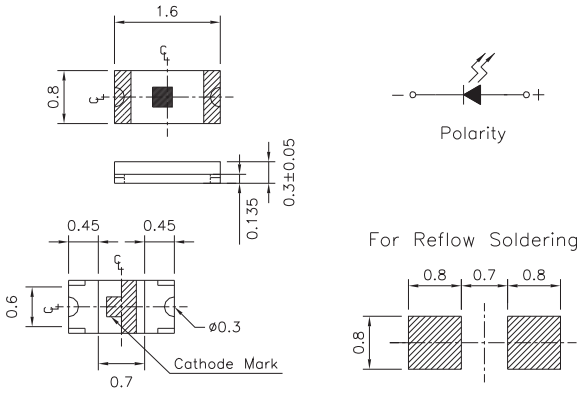

Product	Size (LXWXHmm)	Color	λ_d (nm)/CIE(x,y)	I_V Min./Typ. (mcd)	I_V Max. (mcd)	V_F Min./Typ. (V)	V_F Max. (V)	I_F (mA)
19-218/BHC-ZL1M2QY/3T	1.6x0.8x0.3	Blue	470	11.5	28.5	2.7	3.2	5
19-218/GHC-YR1S2M/3T	1.6x0.8x0.3	Brilliant Green	525	112	285	2.75	3.95	20
19-218/R6C-AL1M2VY/3T	1.6x0.8x0.3	Brilliant Red	624	11.5	28.5	1.7	2.2	5
19-218/R6C-FM2P1B7Y/3T	1.6x0.8x0.3	Brilliant Red	624	22.5	57	1.7	2	5
19-218/T1D-CQ2R2TY/3T	1.6x0.8x0.3	Pure White	x=0.274 y=0.226	90	180	2.6	3	5

UNIT : mm

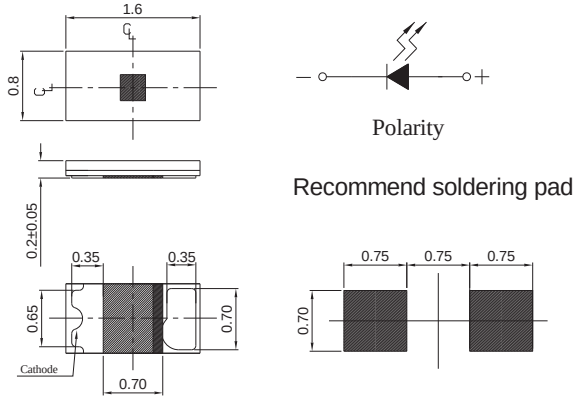

Product	Size (LXWXHmm)	Color	λ_d (nm)/CIE(x,y)	I_V Min./Typ. (mcd)	I_V Max. (mcd)	V_F Min./Typ. (V)	V_F Max. (V)	I_F (mA)
19-219/T3D-AQ2R2TY/3T	1.6x0.8x0.2	Pure White	x=0.274 y=0.226	90	180	2.6	3	5
19-219/T7D-AV1W1E/3T	1.6x0.8x0.2	Pure White	x=0.274 y=0.226	715	1420	2.75	3.65	20
19-219/Y5C-AM1N2VY/3T	1.6x0.8x0.2	Brilliant Yellow	589	18	45	1.7	2.2	5

SMD LED ❙ Surface Mount Chip LED (PCB) ❙ Top View 0805

UNIT : mm

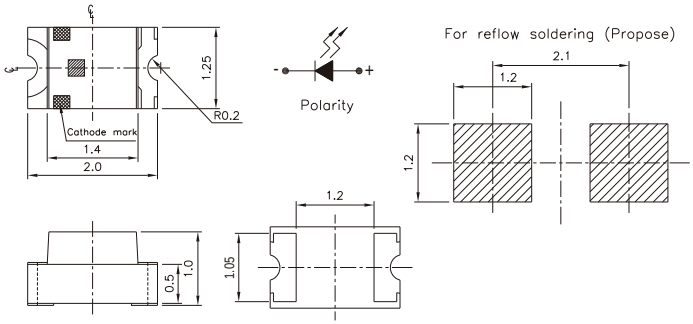

Product	Size (LXWXHmm)	Color	λ_d (nm)/CIE(x,y)	I_V Min./Typ. (mcd)	I_V Max. (mcd)	V_F Min./Typ. (V)	V_F Max. (V)	I_F (mA)
17-11/BHC-AN1P2/3T	2.0x1.25x1.0	Blue	470	28.5	72	2.7 / 3.3	3.7	20

UNIT : mm

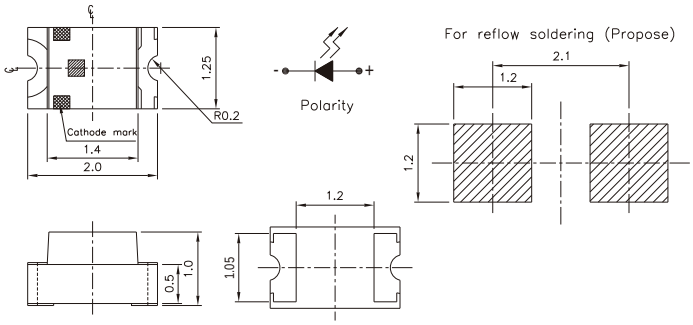

Product	Size (LXWXHmm)	Color	λ_d (nm)/CIE(x,y)	I_V Min./Typ. (mcd)	I_V Max. (mcd)	V_F Min./ Typ. (V)	V_F Max. (V)	I_F (mA)
17-21/BHC-AN1P2/3T	2.0x1.25x1.0	Blue	470	28.5	72	3.5	4	20
17-21/BHC-AP1Q2/3T	2.0x1.25x1.0	Blue	470	45	112	2.7 / 3.3	3.7	20
17-21/BHC-XLMJY/3T	2.0x1.25x1.0	Blue	470	11.5	28.5	2.7	3.1	5
17-21/G6C-AN1P1B/3T	2.0x1.25x1.0	Brilliant Yellow Green	573	28.5	57	1.75	2.35	20
17-21/G6C-AP1Q1B/3T	2.0x1.25x1.0	Brilliant Yellow Green	573	45	90	1.75	2.35	20
17-21/G6C-FM1N2B/3T	2.0x1.25x1.0	Brilliant Yellow Green	573	18	45	1.75	2.35	20
17-21/G6C-FN1P2B/3T	2.0x1.25x1.0	Brilliant Yellow Green	573	28.5	72	1.75	2.35	20
17-21/G6C-FP1Q1B/3T	2.0x1.25x1.0	Brilliant Yellow Green	573	45	90	1.75	2.35	20
17-21/GHC-XS1T2M/3T	2.0x1.25x1.0	Brilliant Green	525	180	450	2.75	3.95	20
17-21/GHC-YR1S2/3T	2.0x1.25x1.0	Brilliant Green	525	112	285	3.5	4	20
17-21/GPC-AK0M1B/3T	2.0x1.25x1.0	Green	562	7.2	22.5	1.75	2.35	20
17-21/GVC-AMPB/3T	2.0x1.25x1.0	Green	565	18	72	1.75	2.35	20
17-21/R6C-AN2Q1B/3T	2.0x1.25x1.0	Brilliant Red	624	36	90	1.75	2.35	20
17-21/R6C-AP1Q2L/3T	2.0x1.25x1.0	Brilliant Red	624	45	112	1.7	2.3	20
17-21/R7C-AN2Q1B/3T	2.0x1.25x1.0	Deep Red	631	36	90	1.75	2.35	20
17-21/S2C-AN1P2B/3T	2.0x1.25x1.0	Brilliant Orange	605	28.5	72	1.75	2.35	20
17-21/S2C-AP1Q2B/3T	2.0x1.25x1.0	Brilliant Orange	605	45	112	1.75	2.35	20
17-21/T1D-ANPHY/3T	2.0x1.25x1.0	Pure White	x=0.274 y=0.226	28.5	72	2.7	3.15	5
17-21/T1D-CP2R1TY/3T	2.0x1.25x1.0	Pure White	x=0.274 y=0.226	57	140	2.6	3	5
17-21/T1D-KN2P2HY/3T	2.0x1.25x1.0	Pure White	x=0.274 y=0.226	36	72	2.7	3.15	5
17-21/W1D-APQHY/3T	2.0x1.25x1.0	Pure White	x=0.274 y=0.226	45	112	2.7	3.15	5
17-21/Y2C-AN1P2/3T	2.0x1.25x1.0	Brilliant Yellow	589	28.5	72	1.7 / 2	2.4	20
17-21/Y2C-CN1P2B/3T	2.0x1.25x1.0	Brilliant Yellow	589	28.5	72	1.75	2.35	20
17-21/Y2C-CP2Q2B/3T	2.0x1.25x1.0	Brilliant Yellow	589	57	112	1.75	2.35	20

SMD LED ❙ Surface Mount Chip LED (PCB) ❙ Top View 0805

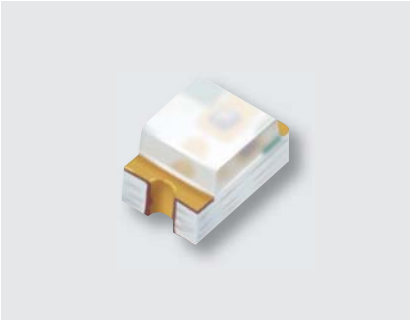

UNIT : mm

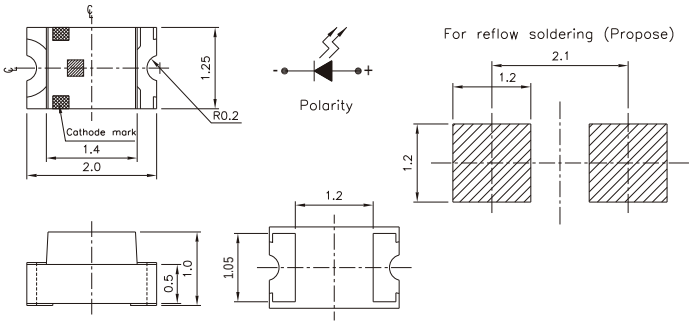

Product	Size (LXWXHmm)	Color	Drive current	I_V (mcd)	Wavelength (nm)	V_F (V)	Viewing Angle (°)
17-21-S3C-6FQ2R2L0E-3T-AM	2x1.25x1	Orange	20 mA	90~180	613~622	1.7~2.3	140
17-21-GPC-A0L1M2B0E-3T-AM	2x1.25x1	Green	20 mA	11.2~28	557.5~567.5	1.75~2.35	140
17-21-Y2C-A0L1M2V0B-3T-AM	2x1.25x1	Yellow	5 mA	11.2~28	585.5~594.5	1.7~2.2	140
17-21-R7C-A0N1P2B0C-3T-AM	2x1.25x1	Red	10 mA	28~71	625.5~637.5	1.75~2.35	140

UNIT : mm

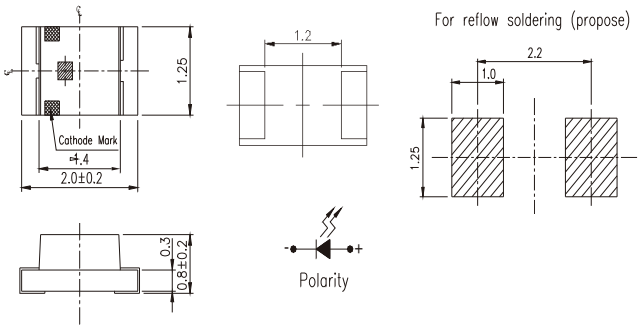

Product	Size (LXWXHmm)	Color	λ_d (nm)/ CIE(x,y)	I_V Min./Typ. (mcd)	I_V Max. (mcd)	V_F Min./Typ. (V)	V_F Max. (V)	I_F (mA)
17-215/B6C-YP2R2/3T	2.0x1.25x0.8	Blue	470	57	180	2.7 / 3.0	3.7	20
17-215/BHC-AN1P2/3T	2.0x1.25x0.8	Blue	470	28.5	72	2.7 / 3.3	3.7	20
17-215/BHC-BP2Q2M/3T	2.0x1.25x0.8	Blue	470	57	112	2.75	3.95	20
17-215/G6C-BM1N2L/3T	2.0x1.25x0.8	Brilliant Yellow Green	573	18	45	1.7	2.3	20
17-215/G6C-FN2P2B/3T	2.0x1.25x0.8	Brilliant Yellow Green	573	36	72	1.75	2.35	20
17-215/R6C-AQ1R2B/3T	2.0x1.25x0.8	Brilliant Red	624	72	180	1.75	2.35	20
17-215/S2C-AQ1R2B/3T	2.0x1.25x0.8	Brilliant Orange	605	72	180	1.75	2.35	20
17-215/S2C-CP2R1B/3T	2.0x1.25x0.8	Brilliant Orange	605	57	180	1.75	2.35	20

SMD LED ❙ Surface Mount Chip LED (PCB) ❙ Top View 1206

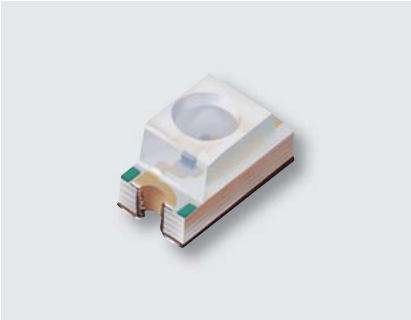

UNIT : mm

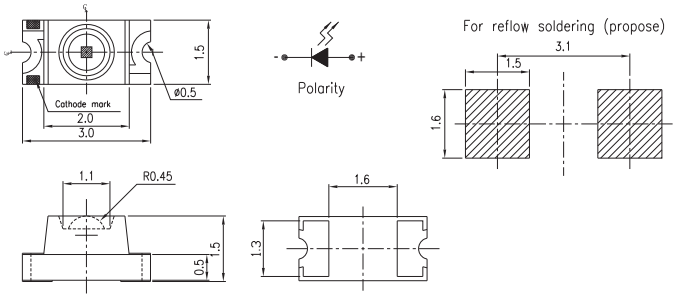

Product	Size (LXWXHmm)	Color	λ_d (nm)/ CIE(x,y)	I_V Min./Typ. (mcd)	I_V Max. (mcd)	V_F Min./Typ. (V)	V_F Max. (V)	I_F (mA)
11-21/BHC-AP2R1/2T	3.0x1.5x1.5	Blue	470	57	140	3.5	4.3	20
11-21/BHC-YR1S1/2T	3.0x1.5x1.5	Blue	470	112	225	2.7 / 3.3	3.7	20
11-21/G6C-BQ1R2B/2T	3.0x1.5x1.5	Brilliant Yellow Green	573	72	180	1.75	2.35	20
11-21/G6C-FN2P2B/2T	3.0x1.5x1.5	Brilliant Yellow Green	573	36	72	1.75	2.35	20
11-21/GHC-YT1U2/2T	3.0x1.5x1.5	Brilliant Green	525	285	715	3.5 / 4.3	--	20
11-21/R6C-AP1Q2LZ/2T	3.0x1.5x1.5	Brilliant Red	624	45	112	1.7	2.3	10
11-21/R6C-AR2S2B/2T	3.0x1.5x1.5	Brilliant Red	624	140	285	1.75	2.35	20
11-21/Y2C-CP2Q2B/2T	3.0x1.5x1.5	Brilliant Yellow	589	57	112	1.75	2.35	20

UNIT : mm

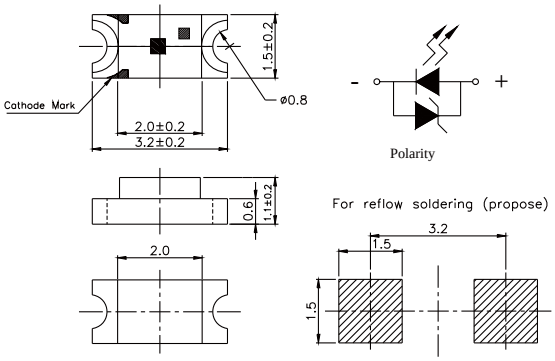

Product	Size (LXWXHmm)	Color	λ_d (nm)/CIE(x,y)	I_V Min./Typ. (mcd)	I_V Max. (mcd)	V_F Min./Typ. (V)	V_F Max. (V)	I_F (mA)
15-11/BHC-AN1P2/2T	3.2x1.5x1.0	Blue	470	28.5	72	2.7 / 3.3	3.7	20
15-11/BHC-ZL2N1QY/2T	3.2x1.5x1.0	Blue	470	14.5	36	2.7	3.2	5
15-11/W1D-APQHY/2T	3.2x1.5x1.0	Pure White	x=0.274 y=0.226	45	112	2.7	3.15	5

SMD LED ❙ Surface Mount Chip LED (PCB) ❙ Top View 1206

UNIT : mm

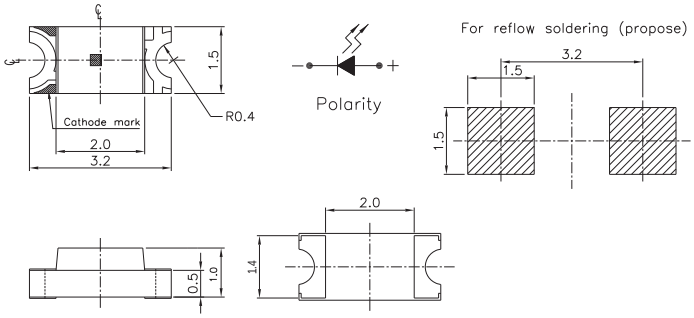

Product	Size (LXWXHmm)	Color	λ_d (nm)/CIE(x,y)	I_V Min./Typ. (mcd)	I_V Max. (mcd)	V_F Min./Typ. (V)	V_F Max. (V)	I_F (mA)
15-21/B6C-YR1S2B2/2T	3.2x1.5x1.0	Blue	470	112	285	2.9	3.6	20
15-21/B6C-ZQ1R1N/2T	3.2x1.5x1.0	Blue	470	72	140	2.7	3.7	20
15-21/BHC-AN1P2/2T	3.2x1.5x1.0	Blue	470	28.5	72	2.7 / 3.3	3.7	20
15-21/G6C-BK1L2VY/2T	3.2x1.5x1.0	Brilliant Yellow Green	573	7.2	18	1.7	2.2	5
15-21/G6C-FM1N2B/2T	3.2x1.5x1.0	Brilliant Yellow Green	573	18	45	1.75	2.35	20
15-21/G6C-FP1Q1L/2T	3.2x1.5x1.0	Brilliant Yellow Green	573	45	90	1.7	2.3	20
15-21/GHC-R2S2/2T	3.2x1.5x1.0	Brilliant Green	525	140	285	2.7 / 3.3	3.7	20
15-21/GHC-YR1S1/2T	3.2x1.5x1.0	Brilliant Green	525	112	225	3.5	3.7	20
15-21/R6C-AN1P2/2T	3.2x1.5x1.0	Brilliant Red	624	28.5	72	1.7/2	2.4	20
15-21/R6C-FQ1R1B/2T	3.2x1.5x1.0	Brilliant Red	624	72	140	1.75	2.35	20
15-21/S2C-AL2M2VY/2T	3.2x1.5x1.0	Brilliant Orange	605	14.5	28.5	1.7	2.2	5
15-21/S2C-AQ2R2B/2T	3.2x1.5x1.0	Brilliant Orange	605	90	180	1.75	2.35	20
15-21/S3C-AP1Q2/2T	3.2x1.5x1.0	Reddish Orange	615	45	112	1.7 / 2.0	2.4	20
15-21/T1D-CP1Q2TY/2T	3.2x1.5x1.0	Pure White	x=0.274 y=0.226	45	112	2.6	3	5
15-21/T7D-JQ2S1PY/2T	3.2x1.5x1.0	Pure White	x=0.274 y=0.226	90	225	2.7	3.3	5
15-21/W1D-APQHY/2T	3.2x1.5x1.0	Pure White	x=0.274 y=0.226	45/72	112	2.7 / 2.9	3.15	5
15-21/Y2C-AN1P2/2T	3.2x1.5x1.0	Brilliant Yellow	589	28.5	72	1.7/2	2.4	20
15-21/Y2C-CP1Q2B/2T	3.2x1.5x1.0	Brilliant Yellow	589	45	112	1.75	2.35	20

UNIT : mm

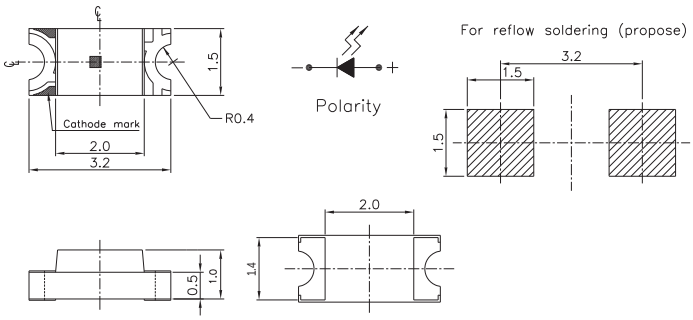

Product	Size (LXWXHmm)	Color	Drive current (mA)	I_V (mcd)	Wavelength (nm)	V_F (V)	Viewing Angle (°)
15-21-Y2C-A0P1Q2B0E-2T-AM	3.2x1.5x1	Yellow	20	45~112	585.5~594.5	1.75~2.35	130
15-21-G6C-A0N1P2B0E-2T-AM	3.2x1.5x1	Brilliant Yellow Green	20	28~71	569.5~577.5	1.75~2.35	130
15-21-R6C-B0Q1R2B0E-2T-AM	3.2x1.5x1	Red	20	71~180	617.5~629.5	1.75~2.35	130
15-21-S2C-A0N2P2L0B-2T-AM	3.2x1.5x1	Orange	5	35.5~71	600.5~612.5	1.7~2.3	130

SMD LED ❙ Surface Mount Chip LED (PCB) ❙ Top View 1206

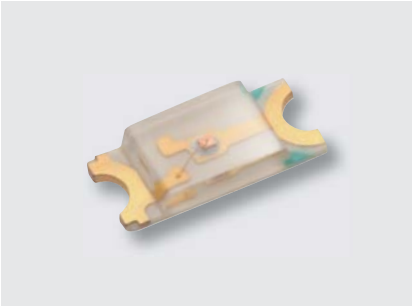

UNIT : mm

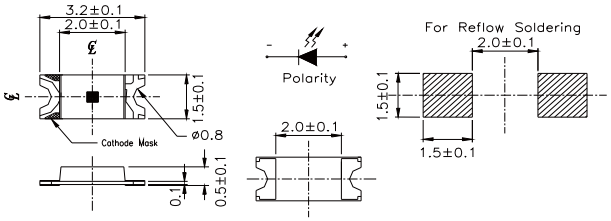

Product	Size (LXWXHmm)	Color	λ_d (nm)/CIE(x,y)	I_V Min./Typ. (mcd)	I_V Max. (mcd)	V_F Min./Typ. (V)	V_F Max. (V)	I_F (mA)
15-215/G7C-BN1P2B/2T	3.2x1.5x0.5	Brilliant Yellow Green	573	28.5	72	1.75	2.35	20
15-215/R6C-AM2P1VY/2T	3.2x1.5x0.5	Brilliant Red	624	22.5	57	1.7	2.2	5
15-215/R6C-AP1Q1L/2T	3.2x1.5x0.5	Brilliant Red	624	45	90	1.7	2.3	20

SMD LED ❙ Surface Mount Chip LED (PCB) ❙ Top View Bi-Color

UNIT : mm

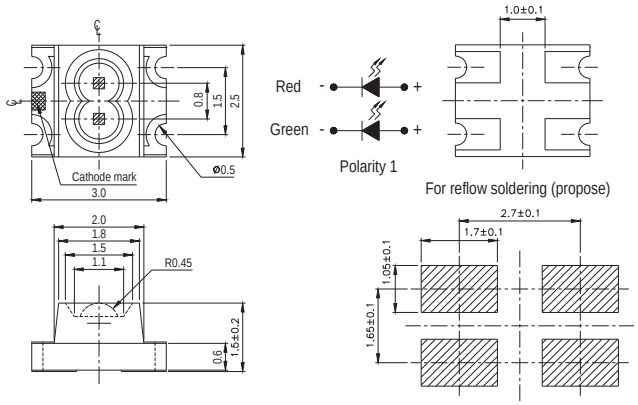

Product	Size (LXWXHmm)	Color	λ_d (nm)/ CIE(x,y)	I_V Min./Typ. (mcd)	I_V Max. (mcd)	V_F Min./Typ. (V)	V_F Max. (V)	I_F (mA)
11-22/R6G6C-A01/2T	3.0x2.5x1.5	● Brilliant Red + ● Brilliant Yellow Green	R6:624 G6:573	R6:140 G6:45	R6:225 G6:72	1.7/2	2.4	20
11-22/R6G6C-QSANP/2T	3.0x2.5x1.5	● Brilliant Red + ● Brilliant Yellow Green	R6:624 G6:573	R6:72 G6:28.5	R6:285 G6:72	2	2.4	20
11-22/R6SGAC-A30/2T	3.0x2.5x1.5	● Brilliant Red + ● Brilliant Yellow Green	R6S:624 SG:565	R6S:450 SG:715	R6S:1120 SG:1800	R6S:1.7 / 2 SG:2.7 / 3.3	R6S:2.4 SG:3.7	20

UNIT : mm

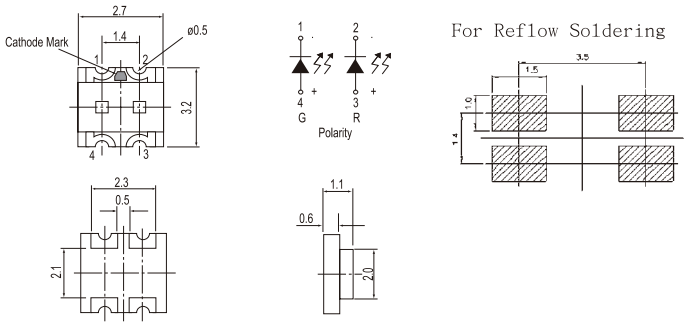

Product	Size (LXWXHmm)	Color	λ_d (nm)/ CIE(x,y)	I_V Min./Typ. (mcd)	I_V Max. (mcd)	V_F Min./Typ. (V)	V_F Max. (V)	I_F (mA)
15-22/R6G6C-A32/2T	3.2x2.7x1.1	● Brilliant Red + ● Brilliant Yellow Green	R6:624 G6:573	R6:28.5 G6:28.5	R6:72 G6:72	R6:1.7 / 2 G6:1.7 / 2	R6:2.4 G6:2.4	20
15-22/R6GHC-A01/2T	3.2x2.7x1.1	● Brilliant Red + ● Brilliant Yellow Green	R6:624 GH:525	R6:90 / 130 GH:112 / 165	--	R6:1.7 / 2 GH:2.7 / 3.3	R6:2.4 GH:3.7	20

SMD LED ❙ Surface Mount Chip LED (PCB) ❙ Top View Bi-Color

UNIT : mm

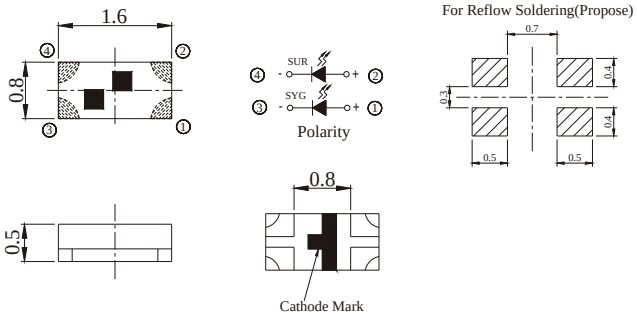

Product	Size (LXWXHmm)	Color	λ_d (nm)/ CIE(x,y)	I_V Min./Typ. (mcd)	I_V Max. (mcd)	V_F Min./Typ. (V)	V_F Max. (V)	I_F (mA)
18-225/B6R6C-C01/3T	1.6x0.8x0.5	Blue + Brilliant Red	B6:470 R6:624	B6:18/28.5 R6:18/28.5	-	B6:2.7/3.3 R6:1.7/2.0	B6:3.7 R6:2.4	5
18-225/R6G6C-A01/3T	1.6x0.8x0.5	Brilliant Red + Brilliant Yellow Green	R6:624 G6:573	R6:45 G6:28.5	R6:112 G6:72	R6:1.7/2 G6:1.7/2	R6:2.4 G6:2.4	20
18-225/S2G6C-A01/3T	1.6x0.8x0.5	Brilliant Orange + Brilliant Yellow Green	S2:605 G6:573	S2:32/48 G6:16/24	-	S2:1.7/2 G6:1.7/2	S2:2.4 G6:2.4	20

UNIT : mm

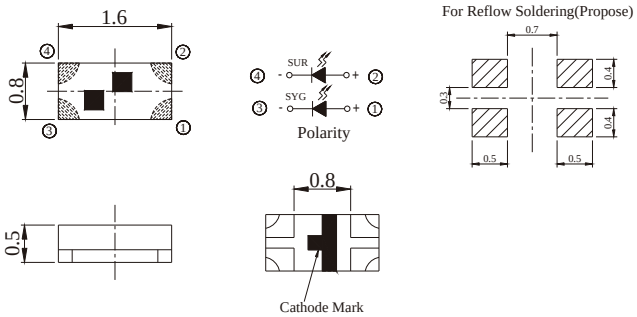

Product	Size (LXWXHmm)	Color	λ_d (nm)/ CIE(x,y)	I_V Min./Typ. (mcd)	I_V Max. (mcd)	V_F Min./Typ. (V)	V_F Max. (V)	I_F (mA)
18-225A/R6GHW-B01/3T	1.6x0.8x0.5	Brilliant Red + Brilliant Green	R6:624 GH:525	R6:28.5 GH:72	R6:72 GH:180	R6:1.7 / 2 GH:2.7 / 3.3	R6:2.4 GH:3.7	10

UNIT : mm

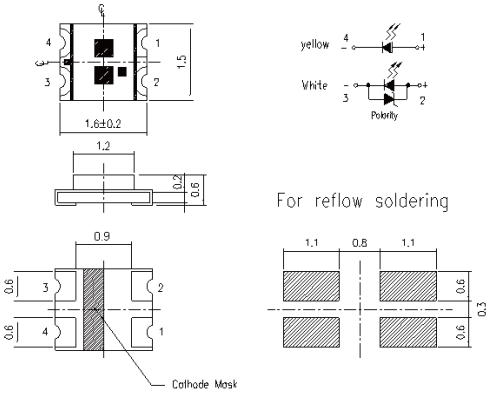

Product	Size (LXWXHmm)	Color	λ_d (nm)/ CIE(x,y)	I_V Min./Typ. (mcd)	I_V Max. (mcd)	V_F Min./Typ. (V)	V_F Max. (V)	I_F (mA)
19-123/Y2ST1D-C30/2T	1.6x1.5x0.6	Brilliant Yellow + Pure White	Y2S:589+ x=0.274 y=0.226	Y2S:28.5 T1:45	Y2S:72 T1:112	Y2S:1.7 / 2 T1:2.7 / 3.3	Y2S:2.4 T1:3.7	5

SMD LED ❙ Surface Mount Chip LED (PCB) ❙ Top View Bi-Color

UNIT : mm

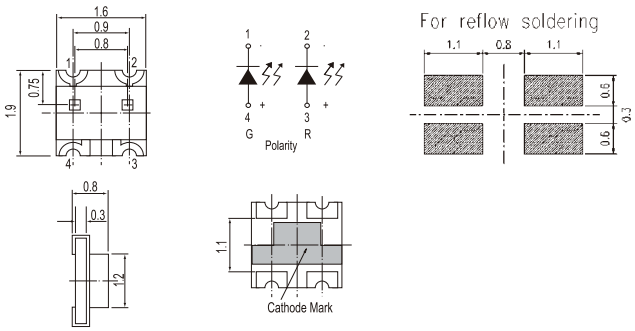

Product	Size (LXWXHmm)	Color	λ_d (nm)/ CIE(x,y)	I_V Min./Typ. (mcd)	I_V Max. (mcd)	V_F Min./Typ. (V)	V_F Max. (V)	I_F (mA)
19-22/G6R6C-A31/2T	1.9x1.6x0.8	Brilliant Red + Brilliant Yellow Green	R6:624 G6:573	R6:45 G6:22.5	R6:90 G6:57	R6:1.7 / 2 G6:1.7 / 2	R6:2.4 G6:2.4	20
19-22/R6BHC-B01/2T	1.9x1.6x0.8	Brilliant Red + Blue	R6:624 BH:470	R6:14.5 / 20 BH:14.5 / 20	--	R6:1.9 BH:2.9	R6:2.3 BH:3.3	5
19-22/R6G6C-A01/2T	1.9x1.6x0.8	Brilliant Red + Brilliant Yellow Green	R6:624 G6:573	R6:45 G6:45	R6:72 G6:72	R6:1.7 / 2 G6:1.7 / 2	R6:2.4 G6:2.4	20
19-22/R6GHC-C02/2T	1.9x1.6x0.8	Brilliant Red + Brilliant Green	R6:624 GH:525	R6:14.5 / 20 GH:45 / 65	--	R6:1.9 GH:2.9	R6:2.3 GH:3.4	5
19-22/Y2G6C-A14/2T	1.9x1.6x0.8	Brilliant Yellow Green + Brilliant Yellow	G6:573 Y2:589	G6:28.5 Y2:45	G6:72 Y2:112	G6:1.7 / 2 Y2:1.7 / 2	G6:2.4 Y2:2.4	20

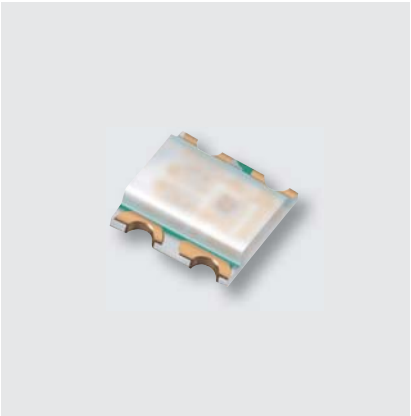

UNIT : mm

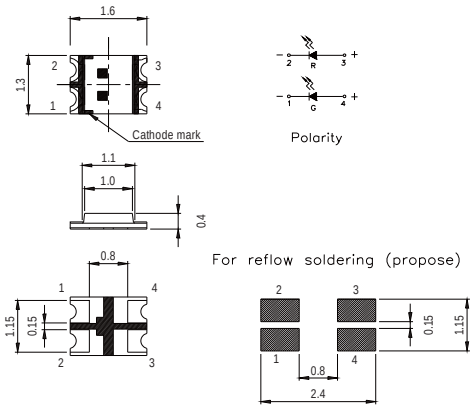

Product	Size (LXWXHmm)	Color	λ_d (nm)/ CIE(x,y)	I_V Min./Typ. (mcd)	I_V Max./Typ. (mcd)	V_F Min./Typ. (V)	V_F Max. (V)	I_F (mA)
19-226/R6BHC-B01/2T	1.6x1.3x0.4	Brilliant Red + Blue	R6:624 BH:470	R6:72 BH:45	Tye: R6:100 BH:80	R6:1.7 / 2 BH:2.7 / 3.3	R6:2.4 BH:3.7	20
19-226/R6G7C-B02/2T	1.6x1.3x0.4	Brilliant Red + Brilliant Yellow Green	R6:624 G7:573	R6:22.5 G7:7.2	Max: R6:57 G7:18	R6:1.7 / 2 G7:1.7 / 2	R6:2.4 G7:2.4	10
19-226/R6GHC-A03/2T	1.6x1.3x0.4	Brilliant Red + Brilliant Green	R6:624 GH:525	R6:72 GH:112	Max: R6:140 GH:225	R6:1.7 / 2 GH:2.7 / 3.3	R6:2.4 GH:3.7	20

SMD LED ❙ Surface Mount Chip LED (PCB) ❙ Top View Bi-Color

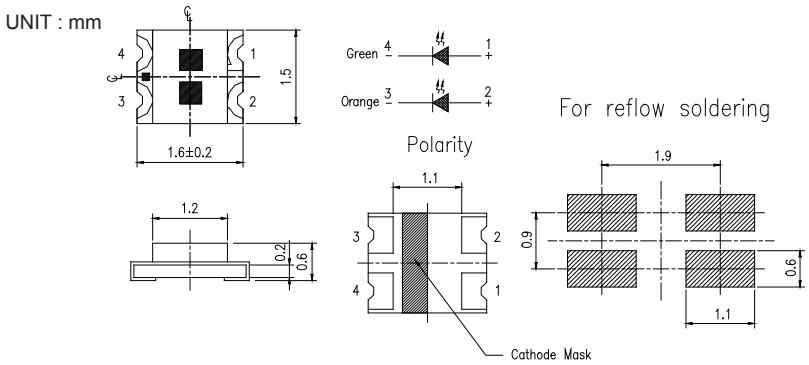

Product	Size (LXWXHmm)	Color	λ_d (nm)/ CIE(x,y)	I_V Min./Typ. (mcd)	I_V Max. (mcd)	V_F Min./Typ. (V)	V_F Max. (V)	I_F (mA)
19-223/G6S2C-A01/2T	1.6x1.5x0.6	Brilliant Orange + Brilliant Yellow Green	S2:605 G6:573	S2:112 G6:28.5	S2:140 G6:45	S2:2 G6:2	S2:2.4 G6:2.4	20
19-223/R6BHC-A05/2T	1.6x1.5x0.6	Brilliant Red + Blue	R6:624 BH:470	R6:72 BH:36	R6:180 BH:72	R6:1.7 / 2 BH:2.7 / 3.3	R6:2.4 BH:3.7	20
19-223/R6G6C-A01/2T	1.6x1.5x0.6	Brilliant Red+ Brilliant Yellow Green	R6:624 G6:573	R6:72 G6:22.5	R6:180 G6:57	R6:1.7 / 2 G6:1.7 / 2	R6:2.4 G6:2.4	20
19-223/R7BHC-A30/2T	1.6x1.5x0.6	Dark Red + Blue	R7:631 BH:470	R7:45 BH:36	R7:112 BH:90	R7:1.7 / 2 BH:2.7 / 3.3	R7:2.4 BH:2.7 / 3.7	20
19-223/R7G6C-A01/2T	1.6x1.5x0.6	Dark Red + Brilliant Yellow Green	R7:631 G6:573	R7:18 G6:18	R7:72 G6:72	R7:2 G6:2	R7:2.4 G6:2.4	20
19-223/S2BHC-A01/2T	1.6x1.5x0.6	Brilliant Orange + Blue	S2:605 BH:470	S2:72 BH:36	S2:140 BH:72	S2:1.7 / 2 BH:3	S2:2.4 BH:3.5	20
19-223/S2T1D-C30/2T	1.6x1.5x0.6	Brilliant Orange + Pure White	S2:605+ x=0.274 y=0.226	S2:18 T1:45	S2:45 T1:112	S2:1.55 T1:2.7	S2:2.15 T1:3.3	5
19-223/Y2G6C-A01/2T	1.6x1.5x0.6	Brilliant Yellow Green + Brilliant Yellow	G6:573 Y2:589	G6:28.5 Y2:36	G6:57 Y2:72	G6:1.7 / 2 Y2:1.7 / 2	G6:2.4 Y2:2.4	20

SMD LED ❙ Surface Mount Chip LED (PCB) ❙ Top View Full Color

UNIT : mm

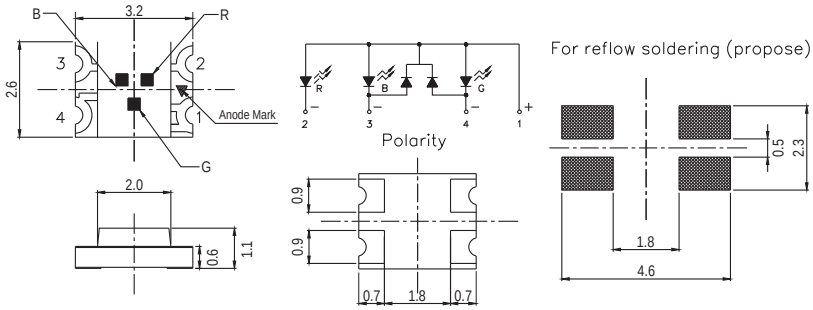

Product	Size (LXWXHmm)	Color	λ_d (nm)/ CIE(x,y)	I_V Min./Typ. (mcd)	I_V Max. (mcd)	V_F Min./Typ. (V)	V_F Max. (V)	I_F (mA)
15-13D/R6GHBHC-A01/2T	3.2x2.6x1.1	Blue + Brilliant Red + Brilliant Green	BH:470 R6:624 GH:525	BH:45 / 70 R6:90 / 140 GH:112 / 180	--	BH:2.7 / 3.3 R6:1.7 / 2 GH:2.7 / 3.3	BH:3.7 R6:2.4 GH:3.7	20

UNIT : mm

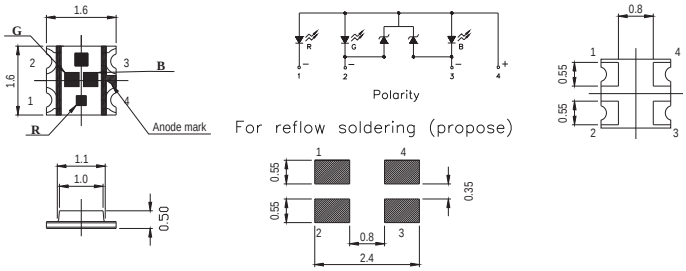

Product	Size (LXWXHmm)	Color	λ_d (nm)/ CIE(x,y)	I_V Min./Typ. (mcd)	I_V Max. (mcd)	V_F Min./Typ. (V)	V_F Max. (V)	I_F (mA)
19-137/R6GHBHC-A01/2T	1.6x1.6x0.5	Blue + Brilliant Red + Brilliant Green	BH:470 R6:624 GH:525	BH:28.5 / 50 R6:72 / 100 GH:112 / 180	--	BH:2.7 / 3.3 R6:1.7 / 2 GH:2.7 / 3.3	BH:3.7 R6:2.4 GH:3.7	20

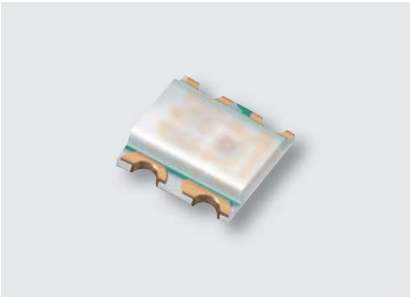

UNIT : mm

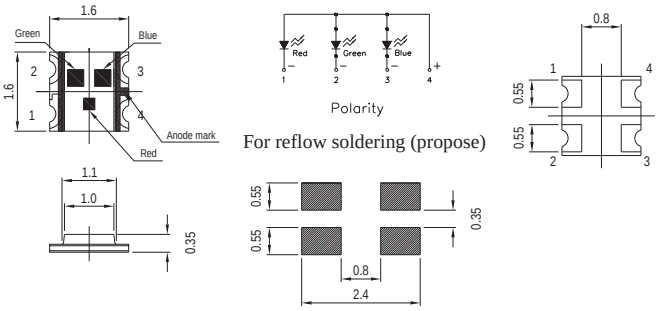

Product	Size (LXWXHmm)	Color	λ_d (nm)/ CIE(x,y)	I_V Min./Typ. (mcd)	I_V Max. (mcd)	V_F Min./Typ. (V)	V_F Max. (V)	I_F (mA)
19-237/R6GHBHC-A04/2T	1.6x1.6x0.35	Blue + Brilliant Red + Brilliant Green	BH:470 R6:624 GH:525	BH:11.5 / 18 R6:18 / 30 GH:28.5 / 60	--	BH:2.6 R6:1.9 GH:2.6	BH:3 R6:2.2 GH:3	5

SMD LED ❙ Surface Mount Chip LED (PCB) ❙ Top View Full Color

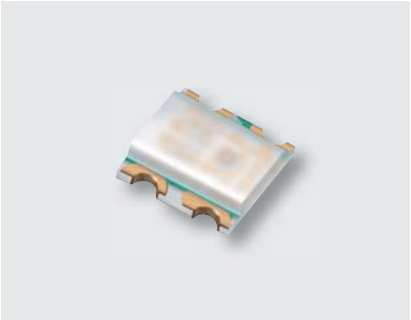

UNIT : mm

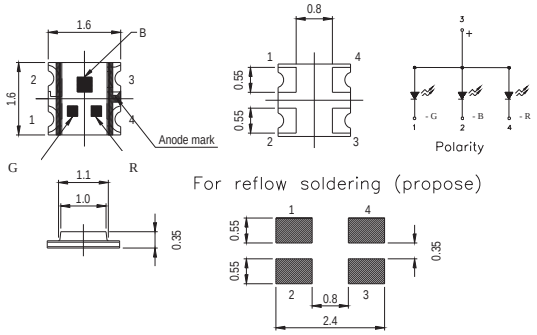

Product	Size (LXWXHmm)	Color	λ_d (nm)/ CIE(x,y)	I_V Min./Typ. (mcd)	I_V Max. (mcd)	V_F Min./Typ. (V)	V_F Max. (V)	I_F (mA)
19-237A/BHR6GHC-A01/2T	1.6x1.6x0.35	Blue + Brilliant Red + Brilliant Green	BH:470 R6:624 GH:525	BH:28.5 / 50 R6:72 / 100 GH:112 / 180	-	BH:3.3 R6:2 GH:3.3	BH:3.9 R6:2.4 GH:3.9	20

UNIT : mm

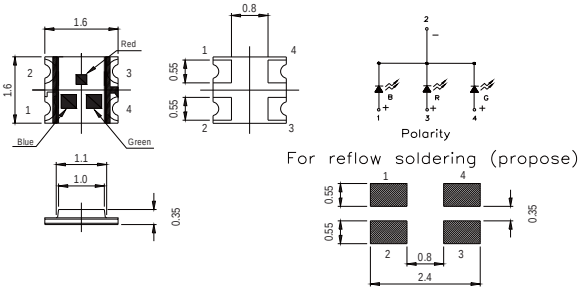

Product	Size (LXWXHmm)	Color	λ_d (nm)/ CIE(x,y)	I_V Min./Typ. (mcd)	I_V Max. (mcd)	V_F Min./Typ. (V)	V_F Max. (V)	I_F (mA)
19-237B/R6GHBHC-C01/2T	1.6x1.6x0.35	Blue + Brilliant Red + Brilliant Green	BH:470 R6:624 GH:525	BH:11.5 / 18 R6:18 / 30 GH:28.5 / 60	BH:28.5 R6:57 GH:112	BH:2.6 / 3 R6:1.7 / 2 GH:2.6 / 3	BH:3.3 R6:2.2 GH:3.3	5

UNIT : mm

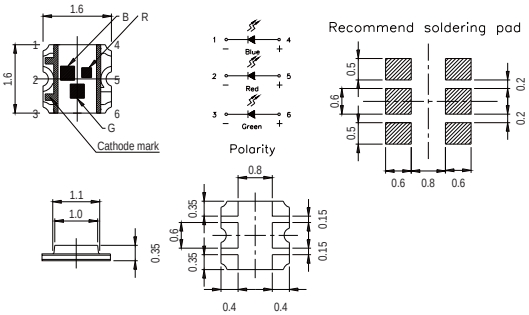

Product	Size (LXWXHmm)	Color	λ_d (nm)/ CIE(x,y)	I_V Min./Typ. (mcd)	I_V Max. (mcd)	V_F Min./Typ. (V)	V_F Max. (V)	I_F (mA)
19-337/R6GHBHC-A01/2T	1.6x1.6x0.35	Blue + Brilliant Red + Brilliant Green	BH:470 R6:624 GH:525	BH:28.5 / 50 R6:72 / 100 GH:112 / 180	--	BH:3.3 R6:2.0 GH:3.3	BH:3.9 R6:2.4 GH:3.9	20

SMD LED ❙ Surface Mount Chip LED (PCB) ❙ Side View (0.2T~1.0T)

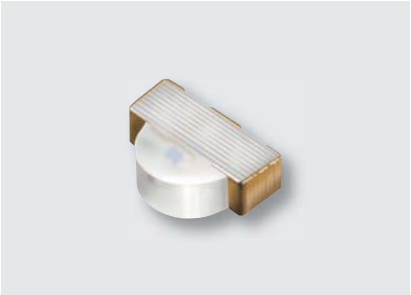

UNIT : mm

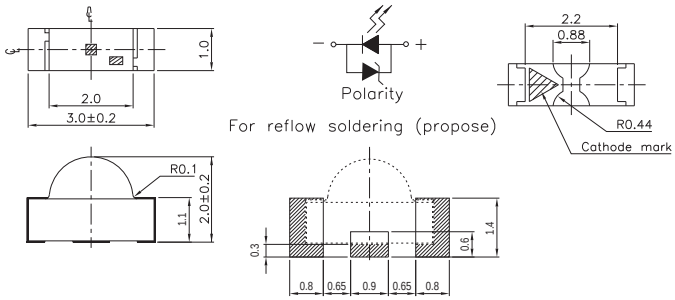

Product	Size (LXWXHmm)	Color	λ_d (nm)/CIE(x,y)	I_V Min./Typ. (mcd)	I_V Max. (mcd)	V_F Min./Typ. (V)	V_F Max. (V)	I_F (mA)
12-11/BHC-ZL1M2QY/2C	3.0x2.0x1.0	● Blue	470	11.5	28.5	2.7	3.2	5

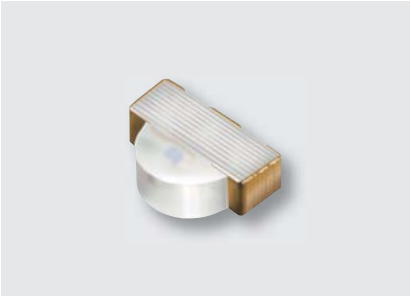

UNIT : mm

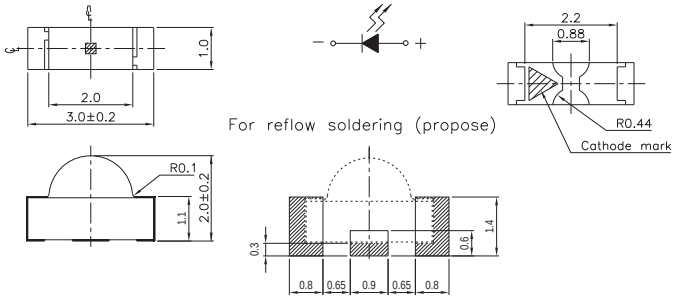

Product	Size (LXWXHmm)	Color	λ_d (nm)/CIE(x,y)	I_V Min./Typ. (mcd)	I_V Max. (mcd)	V_F Min./Typ. (V)	V_F Max. (V)	I_F (mA)
12-21/BHC-AN1P2/2C	3.0x2.0x1.0	● Blue	470	28.5	72	2.7 / 3.3	3.7	20
12-21/BHC-ZL1M2RY/2C	3.0x2.0x1.0	● Blue	470	11.5	28.5	2.5	3.1	5
12-21/GHC-YR2S2/2C	3.0x2.0x1.0	● Brilliant Green	525	140	285	3.5	4.3	20
12-21/R8C-AN1P2B/2D	3.0x2.0x1.0	● Deep Red	639	28.5	72	1.75	2.35	20
12-21/T3D-AQ2S2M/2C	3.0x2.0x1.0	○ Pure White	x=0.274 y=0.226	90	285	2.75	3.95	20

UNIT : mm

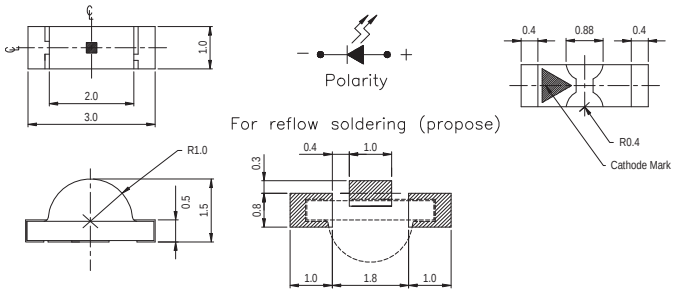

Product	Size (LXWXH mm)	Color	λ_d (nm)/CIE(x,y)	I_V Min./Typ. (mcd)	I_V Max. (mcd)	V_F Min./Typ. (V)	V_F Max. (V)	I_F (mA)
12-21C/BHC-AN1P2/2C	3.0x1.5x1.0	● Blue	470	28.5	72	2.7 / 3.3	3.7	20
12-21C/BHC-YL1M2HY/2C	3.0x1.5x1.0	● Blue	470	11.5	28.5	2.7	3.15	5
12-21C/T3D-CP1Q2B12Y/2C	3.0x1.5x1.0	○ Pure White	x=0.274 y=0.226	45	112	2.7	3.4	5
12-21C/W1D-AR1S2/2C	3.0x1.5x1.0	○ Pure White	x=0.274 y=0.226	112	285	3.3	3.7	20

SMD LED ❙ Surface Mount Chip LED (PCB) ❙ Side View (0.2T~1.0T)

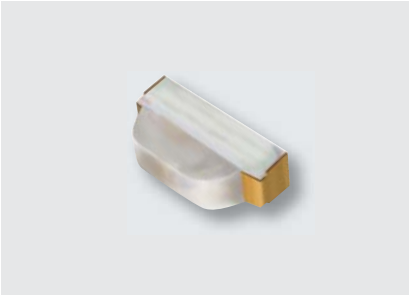

UNIT : mm

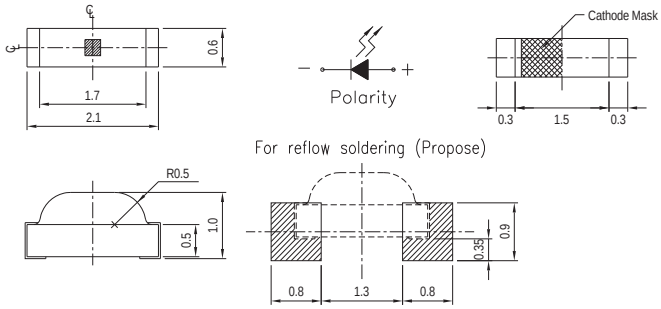

Product	Size (LXWXHmm)	Color	λ_d (nm)/CIE(x,y)	I_V Min./Typ. (mcd)	I_V Max. (mcd)	V_F Min./ Typ. (V)	V_F Max. (V)	I_F (mA)
12-215/BHC-AN1P2/3C	2.1x1.0x0.6	Blue	470	28.5	72	3.5	4	20
12-215/BHC-XL1M2HY/3C	2.1x1.0x0.6	Blue	470	11.5	28.5	2.7	3.15	5
12-215/G6C-AL2M2B/3C	2.1x1.0x0.6	Brilliant Yellow Green	573	14.5	28.5	1.75	2.35	20
12-215/G6C-BP1Q2L/3C	2.1x1.0x0.6	Brilliant Yellow Green	573	45	112	1.7	2.3	20
12-215/R6C-AR1S1B/3C	2.1x1.0x0.6	Brilliant Red	624	112	225	1.75	2.35	20
12-215/T1D-ANPHY/3C	2.1x1.0x0.6	Pure White	x=0.274 y=0.226	28.5	72	2.7	3.15	5
12-215/W1D-ANPHY/3C	2.1x1.0x0.6	Pure White	x=0.274 y=0.226	28.5	72	2.7	3.15	5
12-215/Y2C-BR1S1L/3C	2.1x1.0x0.6	Brilliant Yellow	589	112	225	1.7	2.3	20
12-215/Y2C-CP1Q2B/3C	2.1x1.0x0.6	Brilliant Yellow	589	45	112	1.75	2.35	20
12-215/Y2C-CQ1R1B/3C	2.1x1.0x0.6	Brilliant Yellow	589	72	140	1.75	2.35	20

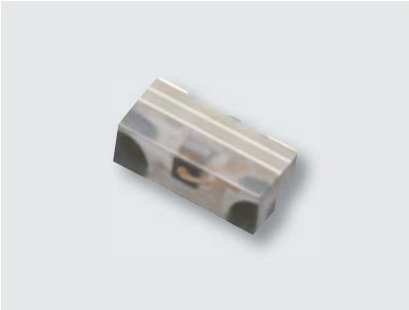

UNIT : mm

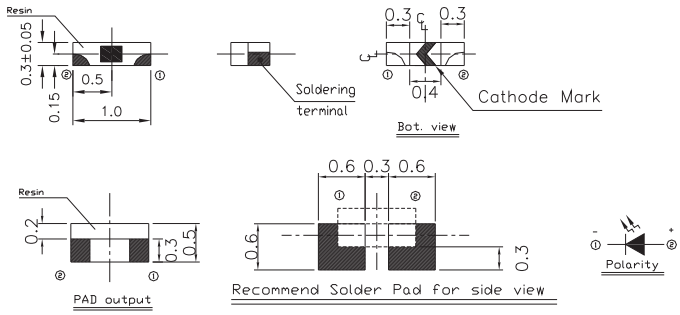

Product	Size (LXWXHmm)	Color	λ_d (nm)/CIE(x,y)	I_V Min./Typ. (mcd)	I_V Max. (mcd)	V_F Min./Typ. (V)	V_F Max. (V)	I_F (mA)
16-916/T1D-AP1Q2QY/3T	1.0x0.5x0.3	Pure White	x=0.274 y=0.226	45	112	2.7	3.2	5

SMD LED ❙ Surface Mount Chip LED (PCB) ❙ Side View (0.2T~1.0T)

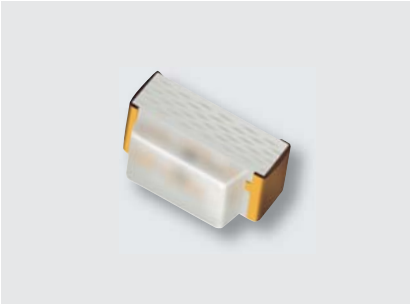

UNIT : mm

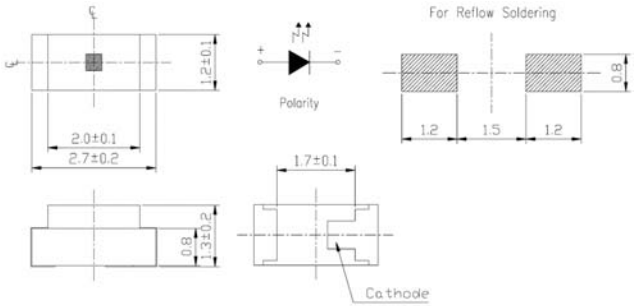

Product	Size (LXWXH mm)	Color	λ_d (nm)/CIE(x,y)	I_V Min./Typ. (mcd)	I_V Max. (mcd)	V_F Min./Typ. (V)	V_F Max. (V)	I_F (mA)
22-21/BHC-AN1P2/2C	2.7x1.3x1.2	Blue	470	28.5	72	3.8	4.5	20
22-21/GHC-YR1S2/2C	2.7x1.3x1.2	Brilliant Green	525	112	285	2.7 / 3.3	3.7	20

UNIT : mm

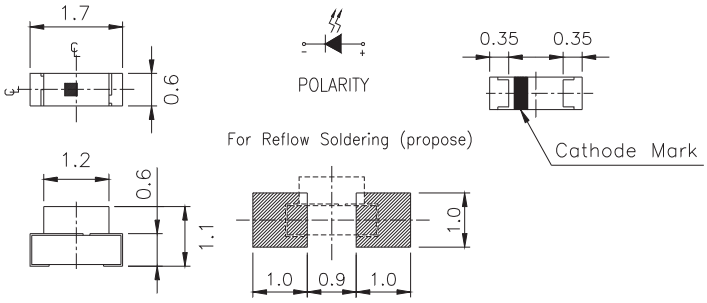

Product	Size (LXWXH mm)	Color	λ_d (nm)/CIE(x,y)	I_V Min./Typ. (mcd)	I_V Max. (mcd)	V_F Min./Typ. (V)	V_F Max. (V)	I_F (mA)
27-21/BHC-AN1P2/3C	1.7x1.1x0.6	Blue	470	28.5	72	2.7 / 3.3	3.7	20
27-21/BHC-AP1Q2/3C	1.7x1.1x0.6	Blue	470	45	112	2.7 / 3.3	3.7	20
27-21/GHC-YR1S2M/3C	1.7x1.1x0.6	Brilliant Green	525	112	285	2.75	3.95	20
27-21/R6C-AP1Q2B/3C	1.7x1.1x0.6	Brilliant Red	624	45	112	1.75	2.35	20
27-21/S2C-FP1Q1L/3C	1.7x1.1x0.6	Brilliant Orange	605	45	90	1.7	2.3	20
27-21/T1D-ANPHY/3C	1.7x1.1x0.6	Pure White	x=0.274 y=0.226	28.5	72	2.7	3.15	5
27-21/T1D-CQ1R2NW/3C	1.7x1.1x0.6	Pure White	x=0.274 y=0.226	72	180	2.7	3.7	15
27-21/T3D-AP2Q2HY/3C	1.7x1.1x0.6	Pure White	x=0.274 y=0.226	57	112	2.7	3.15	5
27-21/W1D-APQHY/3C	1.7x1.1x0.6	Pure White	x=0.274 y=0.226	45	112	2.7	3.15	5
27-21/Y2C-CPQB/3D	1.7x1.1x0.6	Brilliant Yellow	589	45	112	1.75	2.35	20

SMD LED ❙ Surface Mount Chip LED (PCB) ❙ Side View (0.2T~1.0T)

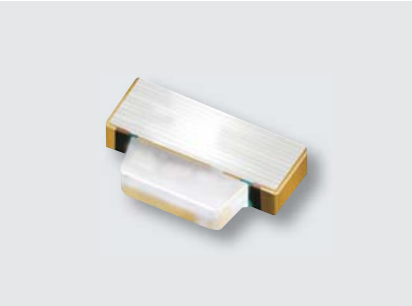

UNIT : mm

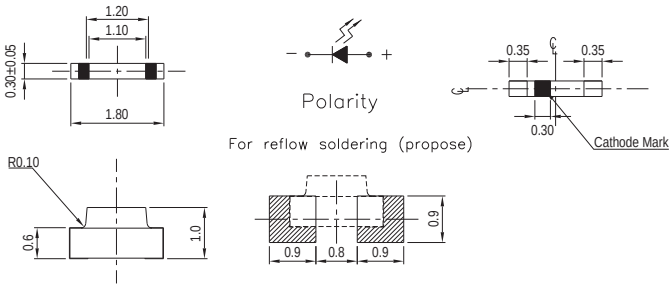

Product	Size (LXWXH mm)	Color	λ_d (nm)/CIE(x,y)	I_V Min./Typ. (mcd)	I_V Max. (mcd)	V_F Min./Typ. (V)	V_F Max. (V)	I_F (mA)
48-213/BHC-ZM2P1QY/3C	1.8x1.0x0.3	● Blue	470	22.5	57	2.7	3.2	5
48-213/R6C-AM1N2VY/3C	1.8x1.0x0.3	● Brilliant Red	624	18	45	1.7	2.2	5
48-213/T2D-AQ2R2QY/3C	1.8x1.0x0.3	○ Pure White	x=0.274 y=0.226	90	180	2.7	3.2	5
48-213/T3D-AP1Q2TY/3C	1.8x1.0x0.3	○ Pure White	x=0.274 y=0.226	45	112	2.6	3	5
48-213/T7D-AQ1R2QY/3C	1.8x1.0x0.3	○ Pure White	x=0.274 y=0.226	72	180	2.7	3.2	5

SMD LED ❙ Surface Mount Chip LED (PCB) ❙ Side View Bi-Color

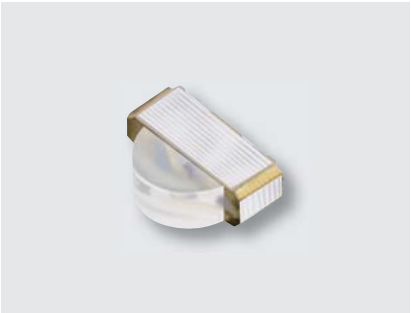

UNIT : mm

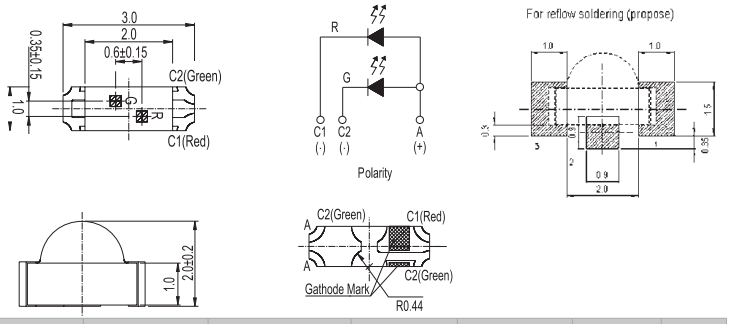

Product	Size (LXWXHmm)	Color	λ_d (nm)/ CIE(x,y)	I_V Min./Typ. (mcd)	I_V Max. (mcd)	V_F Min./Typ. (V)	V_F Max. (V)	I_F (mA)
12-22/BHR6C-A01/2C	3.0x2.0x1.0	Blue + Brilliant Red	BH:470 R6:624	BH:18 / 28 R6:22.5 / 30	--	BH:2.7 R6:1.7	BH:3.1 R6:2.2	5
12-22/G6R8C-A30/2C	3.0x2.0x1.0	Brilliant Yellow Green + Deep Red	G6:573 R8:639	G6:28.5 R8:28.5	G6:72 R8:72	G6:1.7 / 2 R8:1.7 / 2	G6:2.4 R8:2.4	20
12-22/R6GHC-A30/2C	3.0x2.0x1.0	Brilliant Red + Brilliant Green	R6:624 GH:525	R6:72 GH:112	R6:180 GH:285	R6:1.7 / 2 GH:2.7 / 3.3	R6:2.4 GH:3.7	20
12-22/Y2G6C-A30/2C	3.0x2.0x1.0	Brilliant Yellow + Brilliant Yellow Green	Y2:589 G6:573	Y2:45 G6:28.5	Y2:112 G6:72	Y2:1.7 / 2 G6:1.7 / 2	Y2:2.4 G6:2.4	20

UNIT : mm

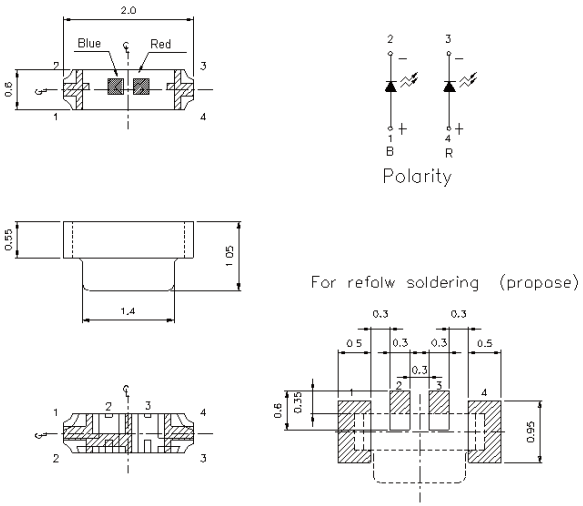

Product	Size (LXWXHmm)	Color	λ_d (nm)/ CIE(x,y)	I_V Min./Typ. (mcd)	I_V Max. (mcd)	V_F Min./Typ. (V)	V_F Max. (V)	I_F (mA)
17-223/BHR7C-C30/3C	2.0x1.05x0.6	Blue + Dark Red	BH:470 R7:631	BH:22.5 R7:14.5	BH:57 R7:36	BH:2.7 R7:1.55	BH:3.2 R7:2.15	5

SMD LED ❙ Surface Mount Chip LED (PCB) ❙ Side View Full Color

UNIT : mm

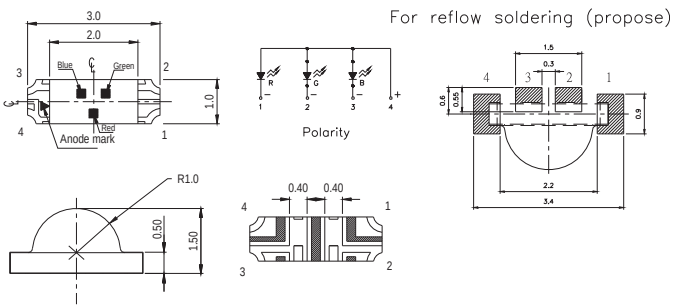

Product	Size (LXWXHmm)	Color	λ_d (nm)/ CIE(x,y)	I_V Min./Typ. (mcd)	I_V Max. (mcd)	V_F Min./Typ. (V)	V_F Max. (V)	I_F (mA)
12-23C/R6GHBHC-A01/2C	3.0x1.5x1.0	Blue+ Brilliant Red + Brilliant Green	BH:470 R6:624 GH:525	BH:32 / 50 R6:63 / 90 GH:125 / 180	--	BH:2.7 / 3.3 R6:1.7 / 2 GH:2.7 / 3.3	BH:3.7 R6:2.4 GH:3.7	20
12-23C/S2GHBHC-A01/2C	3.0x1.5x1.0	Brilliant Orange + Blue+ Brilliant Green	BH:470 S2:605 GH:525	BH:36 / 65 S2:72 / 140 GH:140 / 210	--	BH:3.3 S2:2 GH:3.3	BH:3.9 S2:2.4 GH:3.9	20

UNIT : mm

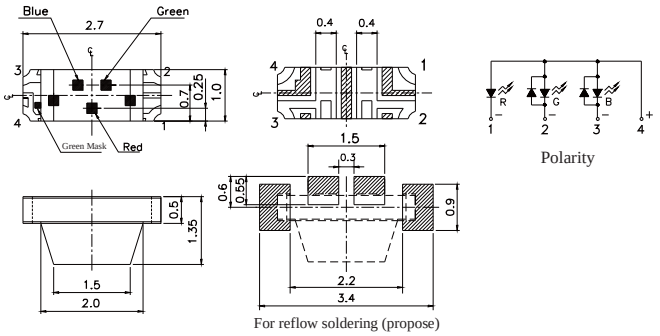

Product	Size (LXWXHmm)	Color	λ_d (nm)/ CIE(x,y)	I_V Min./Typ. (mcd)	I_V Max. (mcd)	V_F Min./Typ. (V)	V_F Max. (V)	I_F (mA)
22-23/R6GHBHC-A01/2C	2.7x1.35x1.0	Blue+ Brilliant Red + Brilliant Green	BH:470 R6:624 GH:525	BH:28.5 / 45 R6:45 / 72 GH:112 / 180	--	BH:2.7 / 3.3 R6:1.7 / 2 GH:2.7 / 3.3	BH:3.7 R6:2.4 GH:3.7	20

SMD LED ❙ Surface Mount Chip LED (PCB) ❙ Side View Full Color

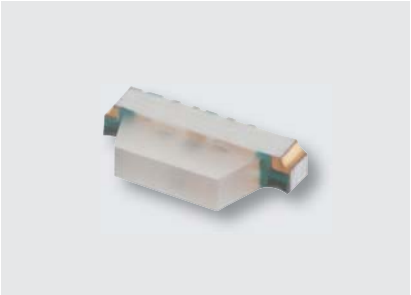

UNIT : mm

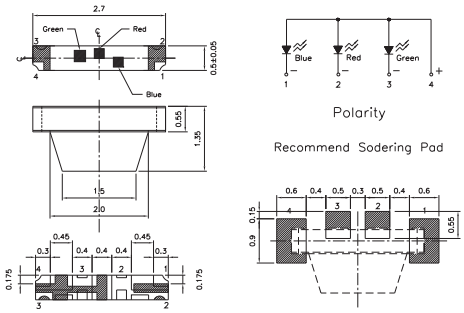

Product	Size (LXWXHmm)	Color	λ_d (nm)/ CIE(x,y)	I_V Min./Typ. (mcd)	I_V Max. (mcd)	V_F Min./Typ. (V)	V_F Max. (V)	I_F (mA)
22-23C/R6GHBHW-C01/2C	2.7x1.35x0.5	● Blue+ ● Brilliant Red + ● Brilliant Green	BH:470 R6:624 GH:525	BH:10 R6:14.5 GH:35	BH:24.5 R6:36 GH:110	BH:2.7 / 2.9 R6:1.7 / 1.85 GH:2.7 / 2.9	BH:3.1 R6:2 GH:3.2	5

SMD LED ❙ Surface Mount Chip LED (PCB) ❙ Reverse Mount

UNIT : mm

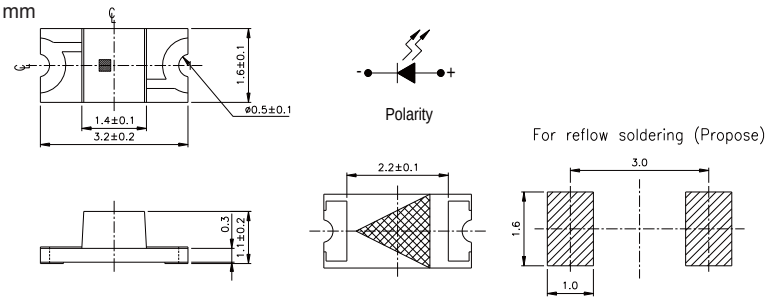

Product	Size (LXWXHmm)	Color	λ_d (nm)/ CIE(x,y)	I_V Min./Typ. (mcd)	I_V Max. (mcd)	V_F Min./Typ. (V)	V_F Max. (V)	I_F (mA)
23-21/G6C-AL2N1/2T	3.2x1.6x1.1	Brilliant Yellow Green	573	14.5	36	1.7 / 2	2.4	20
23-21/GHC-YR2T1/2A	3.2x1.6x1.1	Brilliant Green	525	140	360	3.5	3.9	20
23-21/R6C-AM1N2AY/2A	3.2x1.6x1.1	Brilliant Red	624	18	45	1.55	2.15	5
23-21/R8C-AN2Q1B/2T	3.2x1.6x1.1	Deep Red	639	36	90	1.75	2.35	20

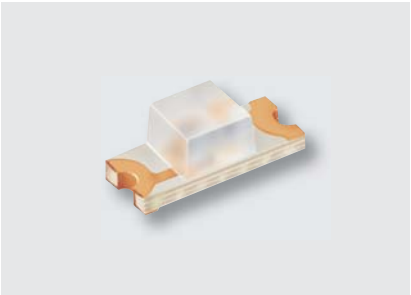

UNIT : mm

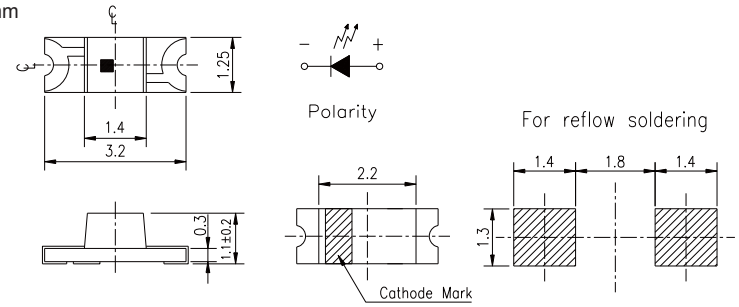

Product	Size (LXWXHmm)	Color	λ_d (nm)/CIE(x,y)	I_V Min./Typ. (mcd)	I_V Max. (mcd)	V_F Min./Typ. (V)	V_F Max. (V)	I_F (mA)
23-21B/BHC-AN1P2/2A	3.2x1.25x1.1	Blue	470	28.5	72	3.5	4	20
23-21B/BHC-ZL1M1Y/2A	3.2x1.25x1.1	Blue	470	11.5	22.5	2.7 / 3.3	3.7	5
23-21B/G6C-AM2P1/2A	3.2x1.25x1.1	Brilliant Yellow Green	573	22.5	57	1.7 / 2	2.4	20
23-21B/S2C-AN1P2/2A	3.2x1.25x1.1	Brilliant Orange	605	28.5	72	1.7 / 2.0	2.4	20
23-21B/T1D-ANQHY/2A	3.2x1.25x1.1	Pure White	x=0.274 y=0.226	28.5	112	2.7	3.15	5
23-21B/T1D-CP2Q2TY/2A	3.2x1.25x1.1	Pure White	x=0.274 y=0.226	57	112	2.6	3	5
23-21B/W1D-ANQHY/2A	3.2x1.25x1.1	Pure White	x=0.274 y=0.226	28.5	112	2.7	3.15	5

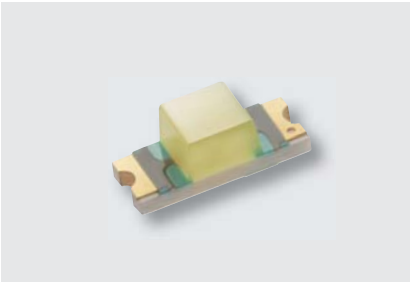

UNIT : mm

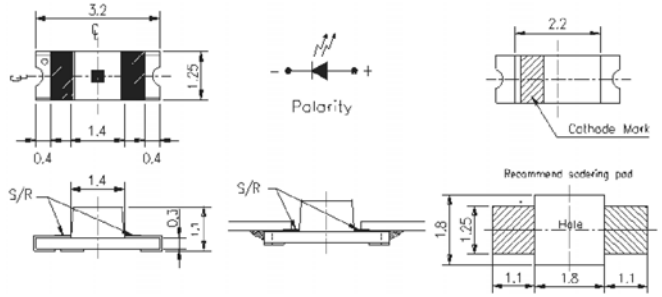

Product	Size (LXWXHmm)	Color	λ_d (nm)/CIE(x,y)	I_V Min./Typ. (mcd)	I_V Max. (mcd)	V_F Min./Typ. (V)	V_F Max. (V)	I_F (mA)
23-21C/T1D-CP2Q2TY/2A	3.2x1.25x1.1	White	x=0.274 y=0.226	57	112	Min: 2.6	3	5

SMD LED ❙ Surface Mount Chip LED (PCB) ❙ Reverse Mount

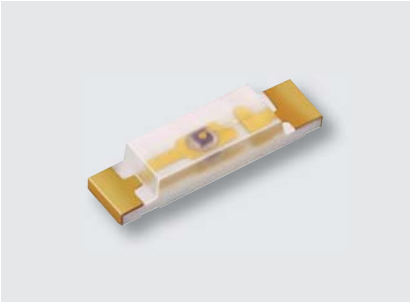

UNIT : mm

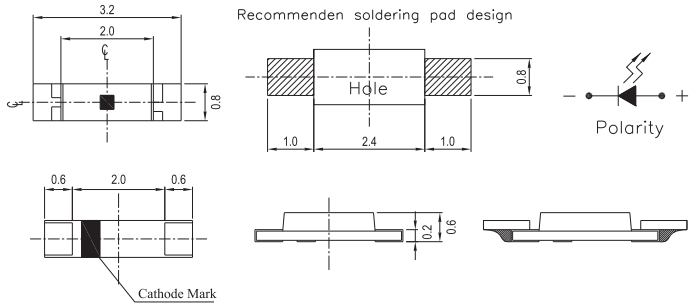

Product	Size (LXWXHmm)	Color	λ_d (nm)/CIE(x,y)	I_V Min./Typ. (mcd)	I_V Max. (mcd)	V_F Min./Typ. (V)	V_F Max. (V)	I_F (mA)
23-215A/BHC-DN2P2E/5A	3.2x0.8x0.6	● Blue	470	36	72	2.75	3.65	20

UNIT : mm

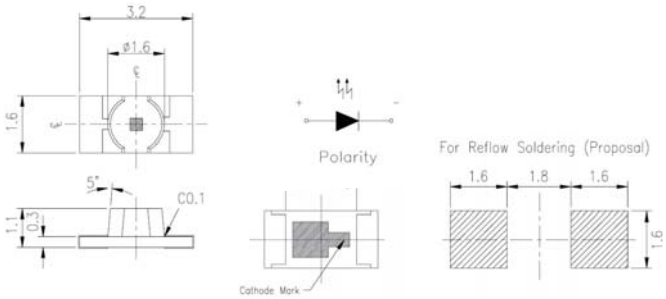

Product	Size (LXWXHmm)	Color	λ_d (nm)/ CIE(x,y)	I_V Min./Typ. (mcd)	I_V Max. (mcd)	V_F Min./Typ. (V)	V_F Max. (V)	I_F (mA)
24-21/BHC-AN1P2/2A	3.2x1.6x1.1	● Blue	470	28.5	72	3.5	4	20
24-21/GHC-YR2T1/2A	3.2x1.6x1.1	● Brilliant Green	525	140	360	3.5	4	20

UNIT : mm

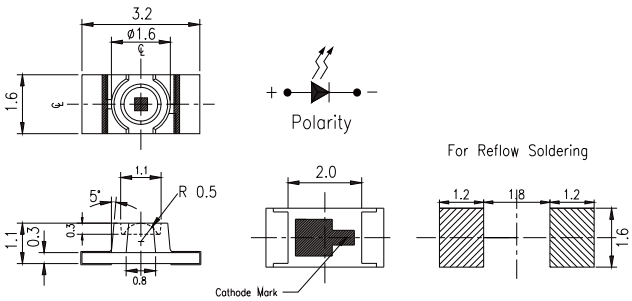

Product	Size (LXWXHmm)	Color	λ_d (nm)/CIE(x,y)	I_V Min./Typ. (mcd)	I_V Max. (mcd)	V_F Min./Typ. (V)	V_F Max. (V)	I_F (mA)
25-21/BHC-APR/2T	3.2x1.6x1.1	● Blue	470	45	180	2.7 / 3.3	3.7	20
25-21/GHC-YSU/2A	3.2x1.6x1.1	● Brilliant Green	525	180	715	3.5	4.3	20
25-21/T1D-ANQHY/2A	3.2x1.6x1.1	○ Pure White	x=0.274 y=0.226	28.5	112	2.7	3.15	5
25-21/W1D-APQHY/2A	3.2x1.6x1.1	○ Pure White	x=0.274 y=0.226	45	112	2.7	3.15	5

SMD LED ❙ Surface Mount Chip LED (PCB) ❙ Reverse Mount Bi-color

UNIT : mm

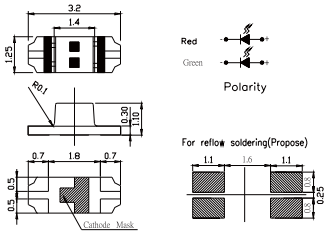

Product	Size (LXWXHmm)	Color	λ_d (nm)/ CIE(x,y)	I_V Min./Typ. (mcd)	I_V Max. (mcd)	V_F Min./Typ. (V)	V_F Max. (V)	I_F (mA)
23-22B/R7G6C-A30/2T	3.2x1.25x1.1	Dark Red + Brilliant Yellow Green	R7:631 G6:573	R7:18 G6:14.5	R7:72 G6:45	R7:1.7 / 2 G6:1.7 / 2	R7:2.4 G6:2.4	20
23-22B/S2BHC-C30/2A	3.2x1.25x1.1	Brilliant Orange + Blue	S2:605 BH:470	S2:11.5 BH:11.5	S2:28.5 BH:28.5	S2:1.55 / 1.85 BH:2.5 / 3.1	S2:2.25 BH:3.5	5

UNIT : mm

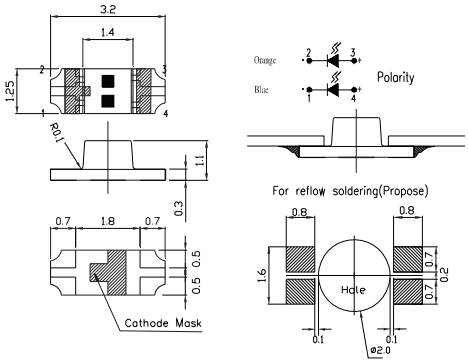

Product	Size (LXWXHmm)	Color	λ_d (nm)/ CIE(x,y)	I_V Min./Typ. (mcd)	I_V Max. (mcd)	V_F Min./Typ. (V)	V_F Max. (V)	I_F (mA)
23-22C/S2BHC-B30/2A	3.2x1.25x1.1	Brilliant Orange + Blue	S2:605 BH:470	S2:22.5 BH:22.5	S2:57 BH:57	S2:1.7 / 2 BH:2.7 / 3.3	S2:2.4 BH:3.7	10

SMD LED ❙ Surface Mount Chip LED (PCB) ❙ Reverse Mount Full color

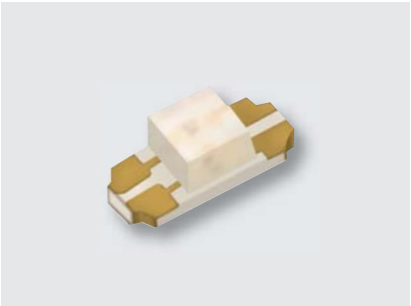

UNIT : mm

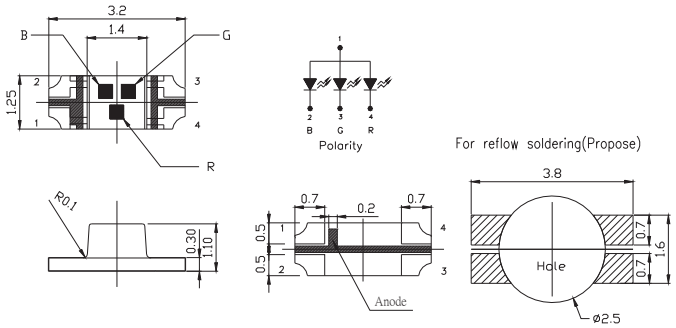

Product	Size (LXWXHmm)	Color	λ_d (nm)/ CIE(x,y)	I_V Min./Typ. (mcd)	I_V Max. (mcd)	V_F Min./Typ. (V)	V_F Max. (V)	I_F (mA)
23-23B/R6GHBHC-A01/2A	3.2x1.25x1.1	● Blue + ● Brilliant Red + ● Brilliant Green	BH:470 R6:624 GH:525	BH:45 / 65 R6:72 / 100 GH:140 / 200	--	BH:2.7 / 3.3 R6:1.7 / 2 GH:2.7 / 3.3	BH:3.7 R6:2.4 GH:3.7	20

SMD LED ❙ Surface Mount PLCC LEDs (Reflector) ❙ Top View LED

UNIT : mm

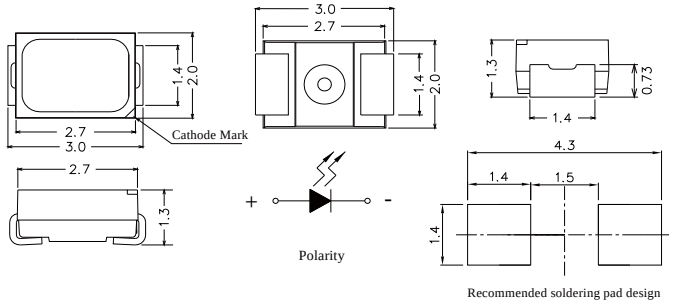

Product	Size (LXWXHmm)	Color	I_V (mcd)	CIE	V_F	Viewing Angle (°)
45-21UMC/3235A54/TR8	3.0x2.0x1.3	○White	1700~1900	x=0.2755~0.3110 y=0.2619~0.3150	3.05~3.35	120

UNIT : mm

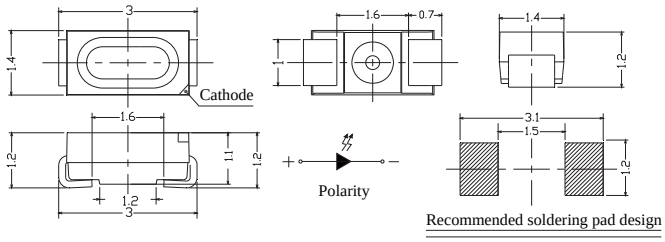

Product	Size (LXWXHmm)	Color	I_V (mcd)	CIE	V_F	Viewing Angle (°)
50-215BUMC/3437425/TR8	3.0x1.4x1.2	○White	1800~2000	x=0.2818~0.3035 y=0.2619~0.2950	3.05~3.45	120

UNIT : mm

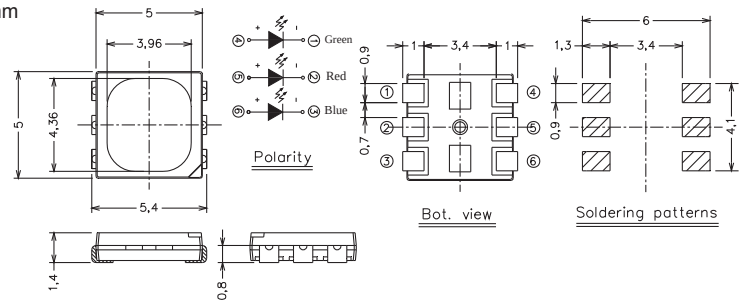

Product	Size (LXWXHmm)	Color	λ_d (nm)/CIE(x,y)	I_V Min./Typ. (mcd)	I_V Max. (mcd)	V_F Min./Typ. (V)	V_F Max. (V)	I_F (mA)
61-238/LK2C-B50638F6GB2/ET	5.0x5.0x1.4	○White	x=0.3031~0.4614 y=0.3108~0.4333	3200	6600	2.7	3.7	20
61-238/RSGBB7C-B02/ET	5.0x5.0x1.4	●Brilliant Red ●Brilliant Green ●Blue	RS: Brilliant Red GB: Brilliant Green B7: Blue	RS: 450 GB: 715 B7: 225	RS: 900 GB: 1420 B7: 450	RS: 1.75 GB: 2.75 B7: 2.75	RS: 2.35 GB: 3.65 B7: 3.65	20
61-238UMC/S3085/TR8/LT	5.0x5.0x1.4	○White	x=0.290~0.311 y=0.283~0.333	4000	6000	2.7	3.6	20

SMD LED ❙ Surface Mount PLCC LEDs (Reflector) ❙ Top View Bi-Color

UNIT : mm

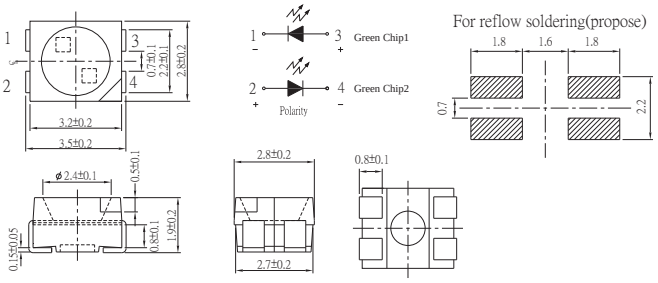

Product	Size (LXWXHmm)	Color	λ_d (nm)	I_V Min./Typ. (mcd)	I_V Max. (mcd)	V_F Min./Typ. (V)	V_F Max. (V)
67-22/G3G3C-B45/2T	3.5x2.8x1.9	G3: ○ Pale Green G3: ○ Pale Green	563.5-571.5	4.0 / 10 (10mA)	36 (10mA)	1.7 / 2.0 (10mA)	2.4 (10mA)
67-22/R6BHC-B07/2T	3.5x2.8x1.9	R6: ● Brilliant Red BH: ● Blue	R6: 621-63 BH: 466.5-471.5	R6: 90 BH: 90	R6: 225 BH: 225	R6: 1.75 BH: 2.9	R6: 2.35 BH: 3.7
67-22/R6G6C-B09/2T	3.5x2.8x1.9	R6: ● Brilliant Red G6: ● Brilliant Yellow Green	R6: 621-627 G6:5 70-574	R6: 57 G6: 36	R6: 140 G6: 90	R6: 1.75 G6: 1.75	R6: 2.35 G6: 2.35
67-22/R6Y2C-B31/2T	3.5x2.8x1.9	R6: ● Brilliant Red Y2: ● Brilliant Yellow	R6: 621-631 Y2: 586-594	72	285	1.75	2.35
67-22SURSYGC/S530-A2/ TR8	3.5x2.8x1.9	SUR: ● Deep Red SYG: ● Brilliant Yellow Green	SUR: 624 SYG: 573	SUR: 16 / 24 SYG: 29 / 59	--	SUR:1.7 / 2.0 SYG:1.7 / 2.0	SUR: 2.4 SYG: 2.4
67-22UYSYGC/S530-A5/ TR8	3.5x2.8x1.9	UY: ● Brilliant Yellow SYG: ● Brilliant Yellow Green	UY: 589 SYG: 573	UY: 80 / 120 SYG: 50 / 80	--	UY: 2.0 SYG: 2.0	UY: 2.4 SYG: 2.4

UNIT : mm

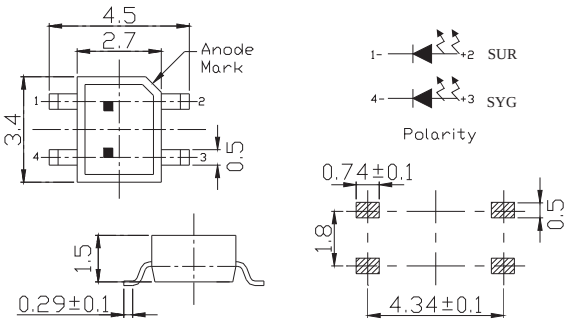

Product	Size (LXWXHmm)	Color	λ_d (nm)	I_V Min./ Typ. (mcd)	I_V Max. (mcd)	V_F Min./ Typ. (V)	V_F Max. (V)	I_F (mA)
93-22SURSYGC/S530-A3/ TR8	3.4x2.7x1.5	SUR: ● Brilliant Red SYG: ● Brilliant Yellow Green	SUR: 624 SYG: 573	SUR: 17 SYG: 11	SUR: 41 SYG: 17	SUR: 2.0 SYG: 2.0	SUR: 2.4 SYG: 2.4	SUR: 20 SYG: 20

SMD LED ❙ Surface Mount PLCC LEDs (Reflector) ❙ Top View White LED

UNIT : mm

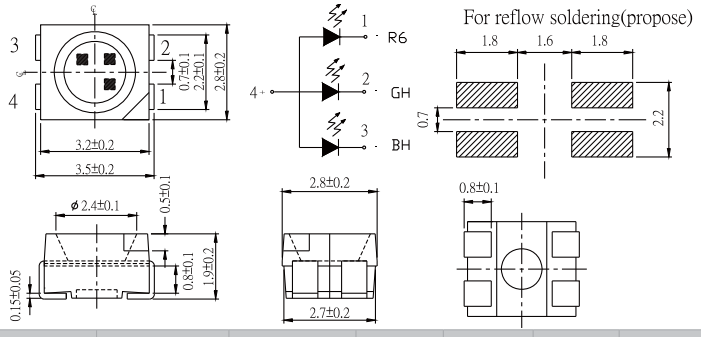

Product	Size (LXWXHmm)	Color	λ_d (nm)/ CIE(x,y)	I_V Min./Typ. (mcd)	I_V Max. (mcd)	V_F Min./ Typ. (V)	V_F Max. (V)	I_F (mA)
67-23/R6GHBHC-B05/2T	3.5x2.8x1.9	R6: ● Brilliant Red GH: ● Brilliant Green BH: ● Blue	R6: 621~631 GH: 520~530 BH: 465~475	R6: 112 GH: 180 BH: 72	R6: 285 GH: 715 BH: 180	R6: 2.0 GH: 3.4 BH: 3.4	R6: 2.4 GH: 3.95 BH: 3.95	20
67-23/T2C-EY2Z0/2T	3.5x2.8x1.9	○ White	x=0.264~0.33 y=0.248~0.36	3600	7200	2.7	3.5	20
67-23SDRSYGUBC/TR8	3.5x2.8x1.8	SDR: ● Deep Red SYG: ● Brilliant Yellow Green UB: ● Blue	SDR: 639 SYG: 573 UB: 470	SDR: 63/112 SYG: 13 /20 UB: 11/ 18	--	SDR: 2.0 SYG: 2.0 UB: 3.5	SDR: 2.4 SYG: 2.4 UB: 4.0	20

UNIT : mm

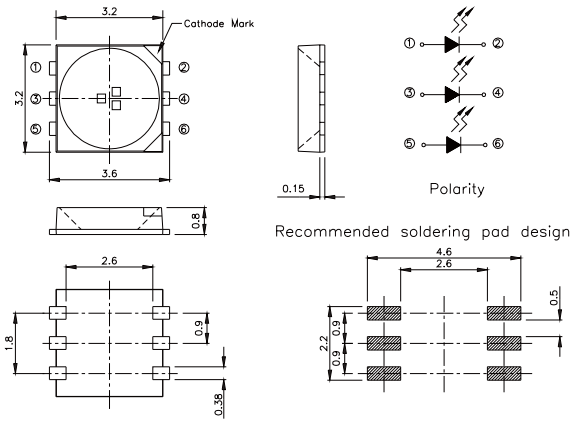

Product	Size (LXWXHmm)	Color	λ_d (nm)/CIE(x,y)	I_V Min./Typ. (mcd)	I_V Max. (mcd)	V_F Min./Typ. (V)	V_F Max. (V)	I_F (mA)
67-235UWC/TR8	3.2x3.2x0.8	○ White	x=0.264~0.361 y=0.248~0.385	2000	2500	3.5	4	20

SMD LED ❙ Surface Mount PLCC LEDs (Reflector) ❙ Top View PLCC2

UNIT : mm

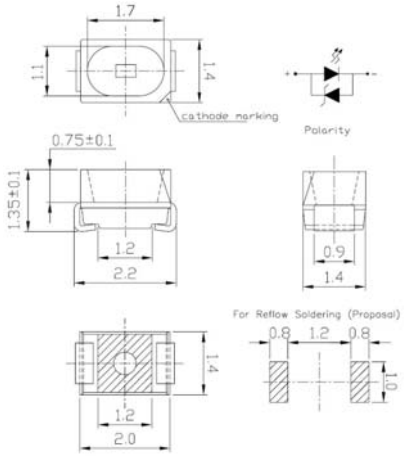

Product	Size (LXWXHmm)	Color	λ_d (nm)/CIE(x,y)	I_V Min./Typ. (mcd)	I_V Max. (mcd)	V_F Min./Typ. (V)	V_F Max. (V)	I_F (mA)
65-11/BHC-AR1S2B2/2T	2.2x1.4x1.35	● Blue	464.5~476.5	112	285	2.9	3.6	20
65-11/T2C-FV1W2E/2T	2.2x1.4x1.35	○ Pure White	x=0.2870~0.3110 y=0.2955~0.3390	715	1800	2.75	3.65	20
65-11UTC/S933/TR8	2.2x1.4x1.35	○ Pure White	x=0.3300~0.3500 y=0.3180~0.3600	1000	1800	2.7	3.5	20

UNIT : mm

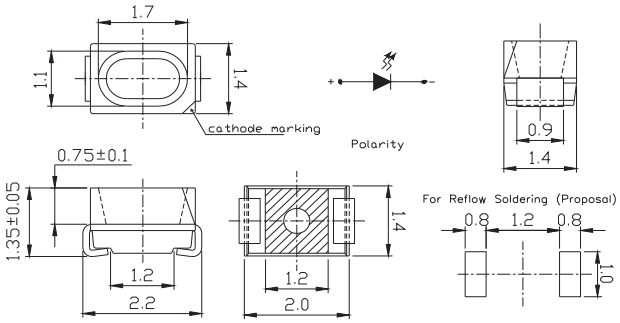

Product	Size (LXWXHmm)	Color	λ_d (nm)/CIE(x,y)	I_V Min./Typ. (mcd)	I_V Max. (mcd)	V_F Min./ Typ. (V)	V_F Max. (V)	I_F (mA)
65-21/G6C-AN2Q1/3T	2.2x1.4x1.35	● Brilliant Yellow Green	569.5-577.5	36	90	--	2.35	20
65-21/Y2C-CJ2L2X/3T	2.2x1.4x1.35	● Brilliant Yellow	586-592	5.8 (2mA)	18 (2mA)	2	2.4	2
65-21/Y2SC-AR1S2B/2T	2.2x1.4x1.35	● Brilliant Yellow	585.5-594.5	112	285	1.75	2.35	20
65-21/Y2SC-FR2S1B/2T	2.2x1.4x1.35	● Brilliant Yellow	586-594	140	225	1.75	2.35	20

SMD LED ❙ Surface Mount PLCC LEDs (Reflector) ❙ Top View PLCC2

UNIT : mm

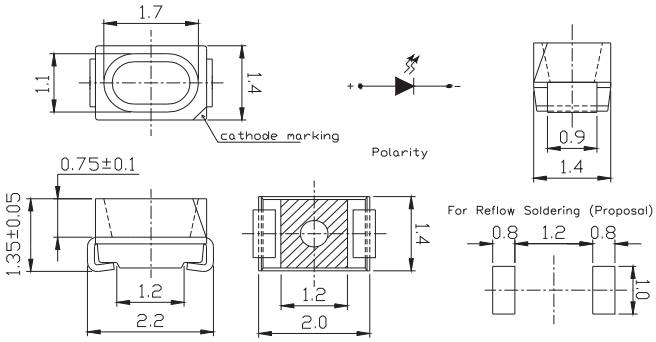

Product	Size (LXWXHmm)	Color	I_V (mcd)	λ_d (nm)	V_F (V)	Viewing Angle (°)
65-21-G6C-Y2P2R1B7E-2T8-AM	2.2x1.4x1.35	Green	56~140	569.5~575.5	1.7~2.4	120
65-21-B1C-A1H2K1A1C-2T8-AM	2.2x1.4x1.35	Blue	3.55~9	462~468	2.9~4.1	120
65-21-B3T-A0S1T1A7E-2T8-AM	2.2x1.4x1.35	White	180~355	x=0.28 y=0.27	2.7~3.8	120
65-21-S2SC-B2S1T1B7E-2T8-AM	2.2x1.4x1.35	Orange	180~355	603~609	1.7~2.4	120
65-21-R7C-A6Q2S1B0E-2T8-AM	2.2x1.4x1.35	Red	90~224	627~639	1.75~2.35	120

UNIT : mm

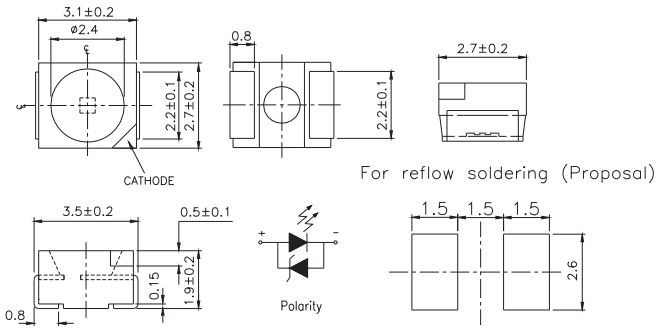

Product	Size (LXWXHmm)	Color	λ_d (nm)/CIE(x,y)	I_V Min./Typ. (mcd)	I_V Max. (mcd)	V_F Min./Typ. (V)	V_F Max. (V)	I_F (mA)
67-11/BHC-FQ2S1F/2T	3.5 x 2.7 x 1.9	Blue	464~472	90	225	2.7	3.5	20
67-11/GHC-AT2V1/2T	3.5 x 2.7 x 1.9	Brilliant Green	520~535	180	450	2.7	3.7	20
67-11/W1C-ES1T2N/2T	3.5 x 2.7 x 1.9	Warm White	x=0.264~0.330 y=0.248~0.360	180	450	2.7	3.7	20
67-11/W1C-FV1W2F/2T	3.5 x 2.7 x 1.9	White	x=0.283~0.330 y=0.276~0.360	715	1800	2.7	3.5	20

SMD LED ❙ Surface Mount PLCC LEDs (Reflector) ❙ Top View PLCC2

UNIT : mm

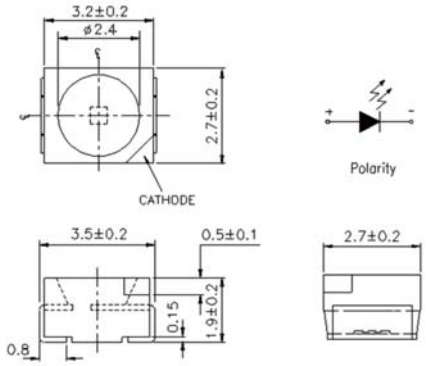

Product	Size (LXWXHmm)	Color	I_V (mcd)	λ_d (nm)	V_F (V)	Viewing Angle (°)
67-21-GHC-Z1T2U2A6C-2T8-AM	3.5x2.7x1.9	● Green	374~575	523~531	2.6~3.8	120
67-21-B1C-R3K1M1C6C-2T8-AM	3.5x2.7x1.9	● Blue	7.1~22.4	461~467	2.9~4.4	120
67-21-B3T-Q8R1S2M0E-2T8-AM	3.5x2.7x1.9	○ White	112~280	x=0.315~0.335 y=0.290~0.353	2.75~3.95	120
67-21-S2C-B2K2L2B7A-2T8-AM	3.5x2.7x1.9	● Sunset Orange	9~18	603~609	1.7~2.4	120
67-21-R7C-F3K1L1B6A-2T8-AM	3.5x2.7x1.9	● Red	7.1~14	625~638	1.7~2.4	120

SMD LED ❙ Surface Mount PLCC LEDs (Reflector) ❙ Top View PLCC2

UNIT : mm

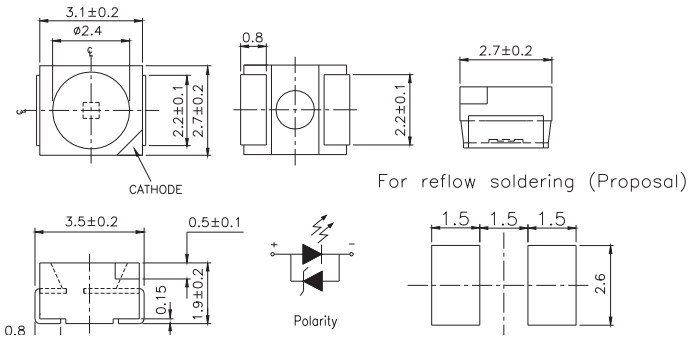

Product	Size (LXWXHmm)	Color	λ_d (nm)/CIE(x,y)	I_v Min./ Typ. (mcd)	I_v Max. (mcd)	V_F Min./ Typ. (V)	V_F Max. (V)	I_F (mA)
67-21/B3C-BN1Q2N/2T	3.5x2.7x1.9	Blue	464.5~473.5	28.5	112	2.7	3.7	20
67-21/B7C-AS2U1N/2T	3.5x2.7x1.9	Blue	464.5~476.5	225	565	2.7	3.7	20
67-21/BHC-FP1Q2F/2T	3.5x2.7x1.9	Blue	464~472	45	112	2.7	3.5	20
67-21/G4C-BQ1T2N/2T	3.5x2.7x1.9	Brilliant Green	523.5~535.5	72	450	2.7	3.7	20
67-21/G6C-FN2P2B/2T	3.5x2.7x1.9	Brilliant Yellow Green	569.5~577.5	45	112	1.75	2.35	20
67-21/GBC-YV2W2N/2T	3.5x2.7x1.9	Brilliant Green	520~535	900	1800	2.7	3.7	20
67-21/GHC-AS2U1B17Z/2T	3.5x2.7x1.9	Brilliant Green	517.5~535.5	225	565	2.5	3.5	10
67-21/GHC-BV1/2T	3.5x2.7x1.9	Brilliant Green	523.5~533.5	715	900	2.7	4.3	20
67-21/R6C-AP2R1B/2T	3.5x2.7x1.9	Brilliant Red	617.5~633.5	57	140	1.75	2.35	20
67-21/R6C-FN2Q1BZ/2T	3.5x2.7x1.9	Brilliant Red	621~631	36	90	1.75	2.35	10
67-21/R6C-FR2T1B/2T	3.5x2.7x1.9	Brilliant Red	621~631	140	360	1.75	2.35	20
67-21/R6C-FS1U1B/2T	3.5x2.7x1.9	Brilliant Red	620.5~631	180	565	1.75 / 2.0	2.35	20
67-21/RSC-FT2V1B/2T	3.5x2.7x1.9	Brilliant Red	621~631	360	900	1.75	2.35	20
67-21/RSC-T1V1/2T	3.5x2.7x1.9	Brilliant Red	624	285	900	1.7 / 2.0	2.4	20
67-21/S2C-FQ2R2B/2T	3.5x2.7x1.9	Brilliant Orange	603~609	90	180	1.75 / 2.0	2.35	20
67-21/S3C-AS1T1/2T	3.5x2.7x1.9	Reddish Orange	605.5~621.5	180	360	2	2.4	20
67-21/T2C-YV2W2B22/2A0	3.5x2.7x1.9	White	x=0.3070~0.3300 y=0.3045~0.3390	900	1800	3	3.6	20
67-21/T2C-ZV1W2E/2T	3.5x2.7x1.9	White	x=0.2569~0.2960 y=0.2283~0.2950	715	1800	2.75	3.65	20
67-21/T3C-EU1V2M/2A0	3.5x2.7x1.9	White	x=0.2640~0.3300 y=0.2480~0.3600	450	1120	2.75	3.95	20
67-21/Y2C-AP1Q1B/2T	3.5x2.7x1.9	Brilliant Yellow	585.5~594.5	45	90	1.75	2.35	20
67-21/Y2C-AS1T1/2T	3.5x2.7x1.9	Brilliant Yellow	585.5~594.5	180	360	2	2.4	20
67-21/Y2C-BR2T1B/2T	3.5x2.7x1.9	Brilliant Yellow	588.5~594.5	140	360	1.75	2.35	20
67-21/YSC-FU1U2B/2T	3.5x2.7x1.9	Brilliant Yellow	586~594	495	715	1.75	2.35	20
67-21/YSC-FU1V2B/2T	3.5x2.7x1.9	Brilliant Yellow	586~594	450	1120	1.75	2.35	20
67-21SUBC/S400-X9/TR8	3.5x2.7x1.9	Blue	470	32	135	3.5	4.3	20
67-21SURC/S530-A7/TR8	3.5x2.7x1.9	Hyper Red	624	23	251	2	2.4	20
67-21UBC/C430/TR8	3.5x2.7x1.9	Blue	466	35/55	NA	3.8	4.5	20
67-21UYC/S530-A6/TR8	3.5x2.7x1.9	Brilliant Yellow	589	40	154	1.7 / 2.0	2.4	20

SMD LED ❙ Surface Mount PLCC LEDs (Reflector) ❙ Top View PLCC3

UNIT : mm

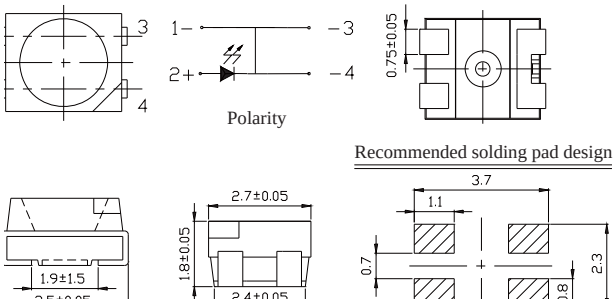

Product	Size (LXWXHmm)	Color	λ_d (nm)/ CIE(x,y)	I_V Min./ Typ. (mcd)	I_V Max. (mcd)	V_F Min./Typ. (V)	V_F Max. (V)	I_F (mA)
67-31A/B7C-AT1U2MZ3/2T	3.5x2.7x1.8	● Blue	464.5~476.5	285	715	2.75	3.95	30
67-31A/GHC-YV1W2EZ3/2T	3.5x2.7x1.8	● Green	520~535	715	1800	2.75	3.65	30
67-31A/SAC-AW1X2B9Z5/2T	3.5x2.7x1.8	● Reddish Orange	605.5~625.5	1120	2850	2.15	2.75	50

UNIT : mm

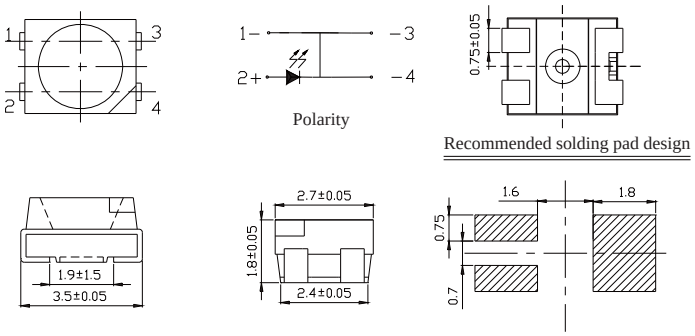

Product	Size (LXWXH mm)	Color	λ_d (nm)/ CIE(x,y)	I_V Min./ Typ. (mcd)	I_V Max. (mcd)	V_F Min./Typ. (V)	V_F Max. (V)	I_F (mA)
67-31E/RSC-AV1W2B9Z5/2T	3.5x2.7x1.8	● Brilliant Red	617.5~633.5	715	1800	2.15	2.75	50

SMD LED ❙ Surface Mount PLCC LEDs (Reflector) ❙ Top View PLCC3

UNIT : mm

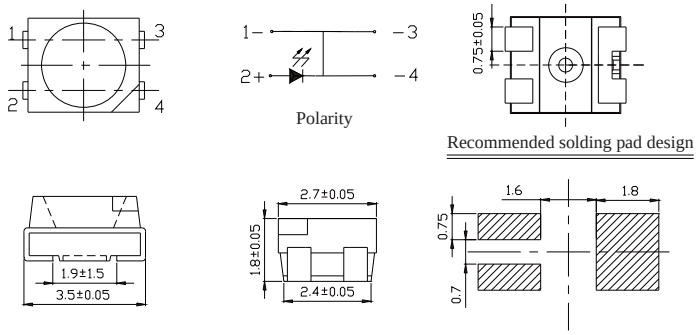

Product	Size (LXWXHmm)	Color	I_V (mcd)	λ_d (nm)/CIE(x,y)	V_F (V)	Viewing Angle (°)
67-31E-Y9NC-E9V1AAC1G-2T8-AM	3.5x2.7x1.8	● Yellow	710~1400	586~595	1.7~2.6	120
67-31E-GPSC-U8P2R1B7G-2T8-AM	3.5x2.7x1.8	● Green	56~140	559~568	1.7~2.4	120
67-31EZ-BLT-2AV2ABC2F-2T8-AM	3.5x2.7x1.8	○ White	900~1800	x=0.315~0.335 y=0.300~0.360	2.7~3.9	120
67-31E-S3SC-M1U2V2C1G-2T8-AM	3.5x2.7x1.8	● Orange	560~1120	609.5~621.5	1.7~2.6	120

SMD LED ❙ Surface Mount PLCC LEDs (Reflector) ❙ Top View PLCC4

UNIT : mm

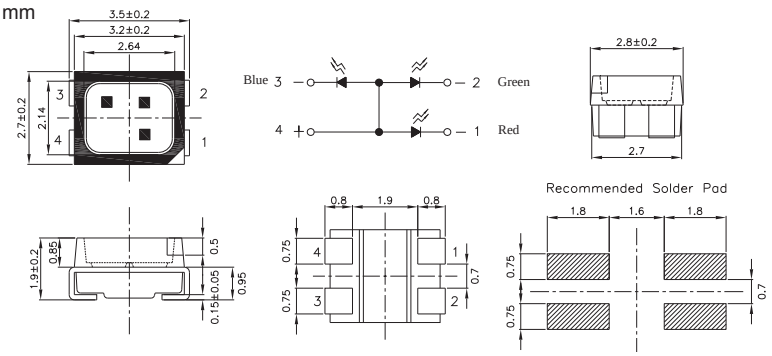

Product	Size (LXWXH mm)	Color	λ_d (nm)/ CIE(x,y)	I_V Min./Typ. (mcd)	I_V Max. (mcd)	V_F Min./Typ. (V)	V_F Max. (V)	I_F (mA)
67-03/BHGHR6W-B11/2T	3.5x2.7x1.9	RS: ● Brilliant Red GH: ● Brilliant Green BH: ● Blue	R6: 632 GH:518 BH:468	R6: 210 GH:575 BH:210	R6: 300 GH:825 BH:300	R6: 1.75 GH:2.9 BH:2.9	R6: 2.35 GH:3.5 BH:3.5	20
67-03/RSGHBHC-B06/1T	3.5x2.7x1.9	RS: ● Brilliant Red GH: ● Brilliant Green BH: ● Blue	RS: 50 GH:30 BH:30	RS: 450 GH:900 BH:226	RS: 715 GH:1420 BH: 450	RS: 2.0 GH:3.5 BH:3.5	RS: 2.4 GH: 4.0 BH: 4.0	20

SMD LED ❙ Surface Mount PLCC LEDs (Reflector) ❙ Side View LED

UNIT : mm

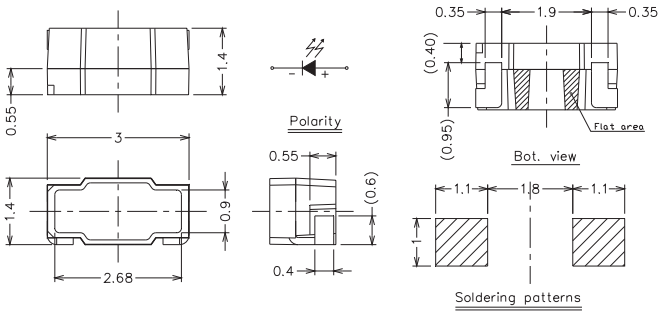

Product	Size (LXWXHmm)	Color	I_V (mcd)	Wavelength (nm)	V_F (V)	Viewing Angle (°)
50-215UMC/3437555/TR8	3.0x1.4x1.4	○White	1800~2000	x=0.2970~0.3205 y=0.2850~0.3270	3.05~3.45	120

UNIT : mm

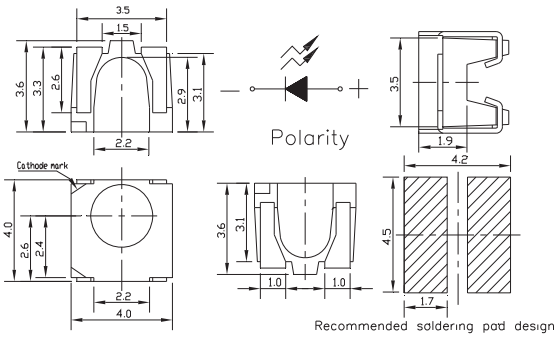

Product	Size (LXWXH mm)	Color	λ_d (nm)/CIE(x,y)	I_V Min./Typ. (mcd)	I_V Max. (mcd)	V_F Min./Typ. (V)	V_F Max. (V)
57-11UTC/S827-1/TR8	4.0x4.0x3.6	○White	x=0.3130~0.3450 y=0.2840~0.3520	900	1800	2.75	3.95

UNIT : mm

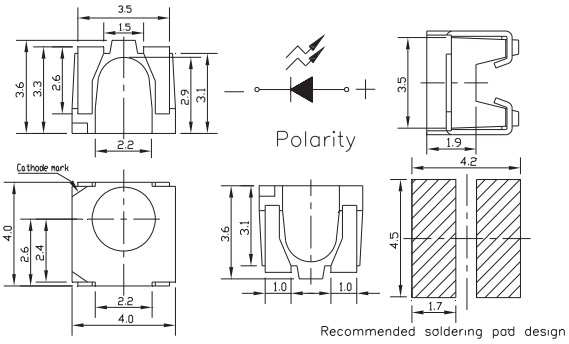

Product	Size (LXWXH mm)	Color	λ_d (nm)/CIE(x,y)	I_V Min./Typ. (mcd)	I_V Max. (mcd)	V_F Min./Typ. (V)	V_F Max. (V)	I_F (mA)
57-21/R6C-AP1Q2B/BF	4.0x4.0x3.6	●Brilliant Red	617.5~633.5	45	112	1.75	2.35	20
57-21SYGC/S530-E3/TR8	4.0x4.0x3.6	●Brilliant Yellow Green	573	32	--	1.7 / 2.0	2.4	20

SMD LED ❙ Surface Mount PLCC LEDs (Reflector) ❙ Side View LED

UNIT : mm

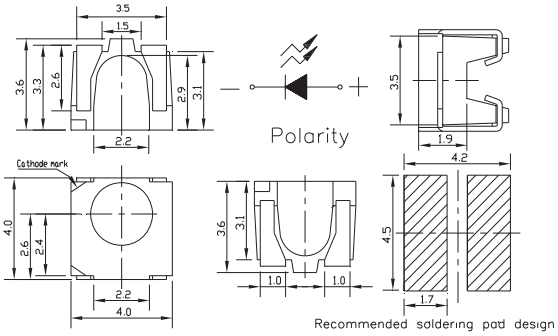

Product	Size (LXWXHmm)	Color	I_V (mcd)	λ_d (nm)/CIE(x,y)	V_F (V)	Viewing Angle (°)
57-21-Y2C-H5S1T1B0E-BT8-AM	4.0x4.0x3.6	Yellow	180~355	590~596	1.75~2.35	120
57-21-B1C-A1J1K2A1C-BT8-AM	4.0x4.0x3.6	Blue	4.5~11.2	462~468	2.9~4.4	120
57-21-GPSC-U8M1N2A5E-BT8-AM	4.0x4.0x3.6	Green	18~45	559~568	1.8~2.4	120
57-21-B5P-A9V1ABBHE-BT8-AM	4.0x4.0x3.6	Ice Bue	710~1800	x=0.2 y=0.3	2.55~3.95	120

UNIT : mm

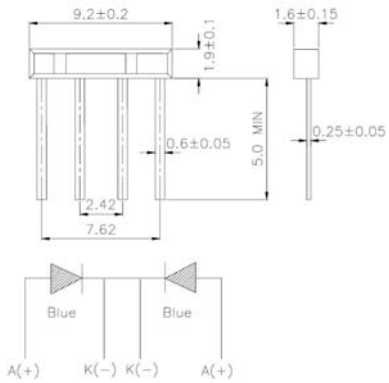

Product	Size (LXWXH mm)	Color	λ_d (nm)	I_V Min./Typ. (mcd)	I_V Max. (mcd)	V_F Min./Typ. (V)	V_F Max. (V)	I_F (mA)
94-22SUBC/S400-A4/S2	9.2x1.6x1.9	Blue	470	50	70	3.5	4.3	20

Super Flux LED | 3 mm

UNIT : mm

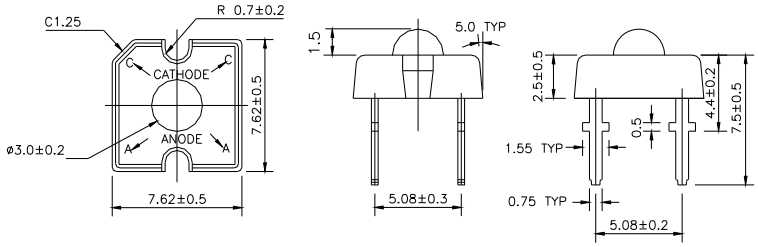

Product	Size (LXWXHmm)	Color	I_V (mlm)	Wavelength (nm)	V_F (V)	Viewing Angle (°)
30-01-B84-RFC-D4T1U1DH-AM	7.62x7.62x9	Red	7150~14250	620~632	1.9~2.9	85
30-01-B84-YSC-A1T1U1DH-AM	7.62x7.62x9	Yellow	7150~14250	587~596	1.9~2.9	85
30-01-B74-S3NC-C6T1U1DH-AM	7.62x7.62x9	Orange	7150~14250	611~620	1.9~2.9	80
30-01/B4C-AKNB	7.62x7.62x9	Blue	1125~2850	464~476	2.8~3.8	80
30-01/G4C-ARTB	7.62x7.62x9	Green	4500~9000	520~532	3.0~4.0	80
31-01-B14-S3NC-C6T1U1DH-AM	7.62x7.62x9	Orange	7150~14250	611~620	1.9~2.9	50
31-01/T4C-4PRB	7.62x7.62x9	White	2850~5650	x=0.30 y=0.29	2.8~3.8	45
31-01/B4C-AKNB	7.62x7.62x9	Blue	1125~2850	464~476	2.8~3.8	50
33-01-C44-RRFC-D1T1U1CH-AM	7.62x7.62x9	Red	7150~14250	620~628	1.9~2.9	110
33-01-C34-YYSC-A5T1U1CH-AM	7.62x7.62x9	Yellow	7150~14250	590~598	1.9~2.9	105
33-01/G4C- ARTB	7.62x7.62x9	Green	4500~9000	520~532	3.0~4.0	90
33-01/B4C-AHKB	7.62x7.62x9	Blue	715~1425	464~472	2.8~4.0	80
38-01-A84-S3NC-C1S2T2CH-AM	7.62x7.62x9	Orange	5650~11250	610~620	1.9~2.9	40
38-01-A84-RAC-D4T1U1DH-AM	7.62x7.62x9	Red	7150~14250	620~632	1.9~2.9	40
38-01-A74-YSC-A2T1U1DH-AM	7.62x7.62x9	Yellow	7150~14250	586~594	1.9~2.9	35

Super Flux LED ❙ 5 mm

UNIT : mm

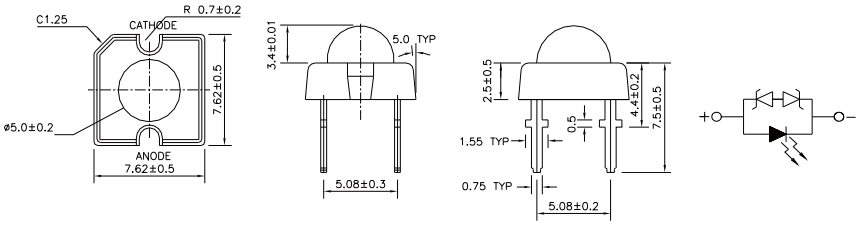

Product	Size (LXWXHmm)	Color	I_V (mlm)	Wavelength (nm)	V_F (V)	Viewing Angle (°)
35-01/T4C-4PRB	7.62x7.62x9	○White	2850~5650	x=0.30 y=0.29	3.0~4.0	25
35-01/B4C-AKNB	7.62x7.62x9	●Blue	1125~2850	464~476	2.8~3.8	25

Super Flux LED ❙ Flat

UNIT : mm

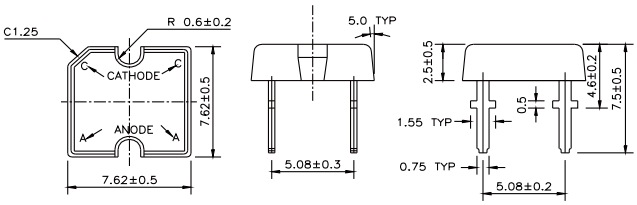

Product	Size (LXWXHmm)	Color	I_V (mlm)	Wavelength (nm)	V_F (V)	Viewing Angle (°)
10-01-C84-YSC-AAS2T2DH-AM	7.62x7.62x7.5	●Yellow	5650~11250	589~598	1.9~2.9	130
32-01/B4C-AJMB	7.62x7.62x7.5	●Blue	900~2250	464~476	2.8~3.8	130
32-01/G4C-AQSB	7.62x7.62x7.5	●Green	3600~7150	520~532	2.8~3.8	130
32-01/T4C-4PRB	7.62x7.62x7.5	○White	2850~5650	x=0.30 y=0.29	2.8~3.8	130

LED Lamps ❙ 2mm Tower Type

UNIT : mm

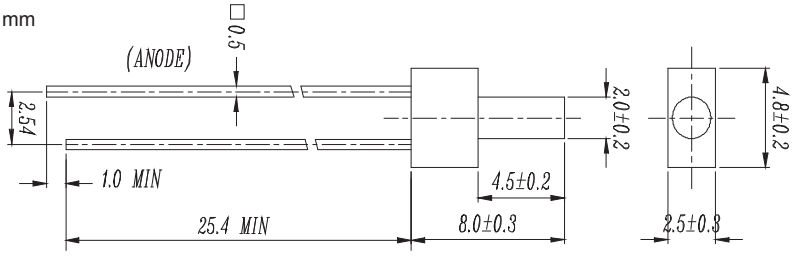

Product	Size (mm)	Color	Lens Type	λ_d (nm) / CIE(x,y)	Resin Color	I_V (Min/Typ/ Max)	V_F (Min/Typ / Max)	Viewing Angle (°)
103SUBD/S400-A4	2.0	Super Blue	Tower	470	Color Diffused	40 / 80	3.4 / 4.0	100
103SURD/S530-A3	2.0	Hyper Red	Tower	624	Color Diffused	25 / 40	2.0 / 2.4	130
103SYGD/S530-E2	2.0	Super Yellow Green	Tower	573	Color Diffused	6.3 / 12.5	2.0 / 2.4	130

LED Lamps ❙ 3mm Round Type

UNIT : mm

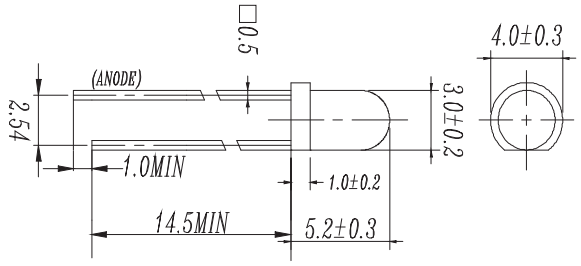

Product	Size (mm)	Color	Lens Type	λ_d (nm) / CIE(x,y)	Resin Color	I_V (Min/Typ/ Max)	V_F (Min/Typ / Max)	Viewing Angle (°)
204-10SDRD/S530-A3	3	Super Deep Red	Round	639	Color Diffused	40 / 80	2.0 / 2.4	50
204-10SUBC/S400-A4	3	Super Blue	Round	468	Water Clear	400 / 800	3.4 / 4.0	20
204-10SUGC/S400-A5	3	Super Green	Round	530	Water Clear	1600 / 3200	3.4 / 4.0	30
204-10SURC/S400-A8	3	Brilliant Red	Round	632	Water Clear	1000 / 2000	2.0 / 2.4	20
204-10SURC/S530-A3	3	Hyper Red	Round	624	Water Clear	250 / 500	2.0 / 2.4	25
204-10SURC/S530-A3-L	3	Brilliant Red	Round	624	Water Clear	250 / 400	2.0 / 2.4	30
204-10SURD/S530-A3	3	Brilliant Red	Round	624	Color Diffused	40 / 80	2.0 / 2.4	45
204-10SURD/S530-A3-L	3	Brilliant Red	Round	624	Color Diffused	10 / 20	2.0 / 2.4	45
204-10SURT/S530-A3	3	Hyper Red	Round	624	Trans	250 / 500	1.7/2.0/2.4	20
204-10SYGC/S530-E2	3	Super Yellow Green	Round	573	Water Clear	125 / 250	2.0 / 2.4	20
204-10SYGD/S530-E3	3	Super Yellow Green	Round	573	Color Diffused	63 / 100	2.0 / 2.4	45
204-10SYGT/S530-E2	3	Super Yellow Green	Round	573	Trans	100 / 200	2.0 / 2.4	20
204-10USOC/S400-A9	3	Super Sunset Orange	Round	615	Water Clear	1600 / 3200	2.0 / 2.4	20
204-10UYC/S400-A9	3	Super Yellow	Round	589	Water Clear	1000 / 3200	2.0 / 2.4	20
204-10UYC/S530-A3	3	Super Yellow	Round	589	Water Clear	310 / 540	2.0 / 2.4	20
204-10UYC/S530-A3-L	3	Brilliant Yellow	Round	589	Water Clear	320 / 400	2.0 / 2.4	20
204-10UYD/S530-A3	3	Super Yellow	Round	589	Color Diffused	100 / 200	2.0 / 2.4	40
204-10UYD/S530-A3-L	3	Super Yellow	Round	589	Color Diffused	100 / 200	2.0 / 2.4	60
204-10UYOC/S530-A3	3	Yellow Orange	Round	605	Water Clear	320 / 500	2.0 / 2.4	30
204-10UYT/S530-A3	3	Super Yellow	Round	589	Trans	250 / 500	2.0 / 2.4	20

LED Lamps ❙ 3mm Round Type

UNIT : mm

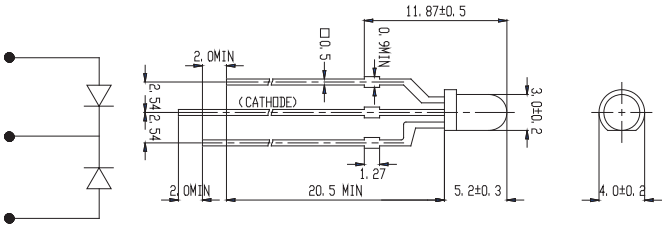

Product	Size (mm)	Color	Lens Type	λ_d (nm) / CIE(x,y)	Resin Color	I_v (Min/Typ/ Max)	V_F (Min/Typ / Max)	Viewing Angle (°)
209SURSYGW/S530-A3	3	Hyper Red / Super Yellow Green	Round	624 / 573	White Diffused	40 / 80 20 / 40	2.0 / 2.4 2.0 / 2.4	80
209SDRSYGW/S530-A3	3	Super Deep Red / Super Yellow Green	Round	639 / 573	White Diffused	25 / 50 16 / 32	2.0 / 2.4 2.0 / 2.4	80
209SURSYGC/S530-A3	3	Hyper Red / Super Yellow Green	Round	624 / 573	Water Clear	63 / 125 40 / 80	2.0 / 2.4 2.0 / 2.4	80
209SURSYGW/S530-A3	3	Hyper Red / Super Yellow Green	Round	624 / 573	White Diffused	40 / 80 20 / 40	2.0 / 2.4 2.0 / 2.4	80
209UYOSUGC/S530-A3	3	Super Yellow Orange / Brilliant Green	Round	611 / 518	Water Clear	100 / 200 160 / 320	2.0 / 2.4 3.5 / 4.3	50

UNIT : mm

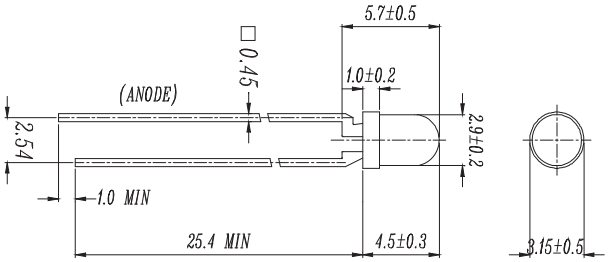

Product	Size (mm)	Color	Lens Type	λ_d (nm) / CIE(x,y)	Resin Color	I_v (Min/Typ/ Max)	V_F (Min/Typ / Max)	Viewing Angle (°)
264-7SDRC/S530-A3	2.9	Super Deep Red	Round	639	Water Clear	40 / 100	1.7 / 2.0 / 2.4	40
264-7SDRD/S530-A3	2.9	Super Deep Red	Round	639	Color Diffused	50 / 100	2.0 / 2.4	60
264-7SUGC/C525	2.9	Brilliant Green	Round	525	Water Clear	400 / 800	3.5 / 4.3	30
264-7SURC/S400-A8	2.9	Hyper Red	Round	624	Water Clear	400 / 800	2.0 / 2.4	40
264-7SURD/S530-A3	2.9	Brilliant Red	Round	624	Color Diffused	63 / 125	2.0 / 2.4	60
264-7SURT/S530-A3	2.9	Hyper Red	Round	624	Trans	160 / 320	2.0 / 2.4	40
264-7SYGC/S530-E3	2.9	Super Yellow Green	Round	573	Water Clear	100 / 320	2.0 / 2.4	35
264-7SYGD/S530-E2	2.9	Super Yellow Green	Round	573	Color Diffused	20 / 32	2.0 / 2.4	60
264-7SYGT/S530-E2	2.9	Super Yellow Green	Round	573	Trans	63 / 125	2.0 / 2.4	40
264-7UYC/S400-A9	2.9	Super Yellow	Round	589	Water Clear	400 / 800	2.0 / 2.4	40

LED Lamps ❙ 3mm Round Type

UNIT : mm

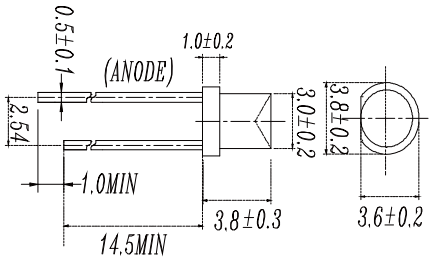

Product	Size (mm)	Color	Lens Type	λ_d (nm) / CIE(x,y)	Resin Color	I_v (Min/Typ/ Max)	V_F (Min/Typ / Max)	Viewing Angle (°)
484-10SURT/S530-A3	3	Hyper Red	Round	624	Trans	10 / 20	2.0 / 2.4	130
484-10UTC/S400-A6	3	Warm White	Round	x=0.29 y=0.28	Water Clear	39 / 332	2.75 / 3.85	120
484-10UYT/S530-A3	3	Super Yellow	Round	589	Trans	16 / 32	2.0 / 2.4	110

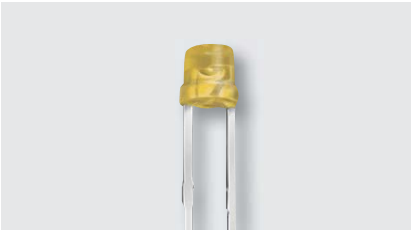

UNIT : mm

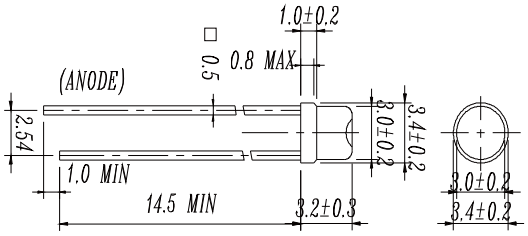

Product	Size (mm)	Color	Lens Type	λ_d (nm)/ CIE(x,y)	Resin Color	I_v (Min/Typ/ Max)	V_F (Min/Typ / Max)	Viewing Angle (°)
494-10SURT/S530-A3	3	Hyper Red	Round	624	Trans	16 / 32	2.0 / 2.4	100
494-10SYGT/S530-E2	3	Brilliant Yellow Green	Round	573	Trans	10 / 20	2.0 / 2.4	100

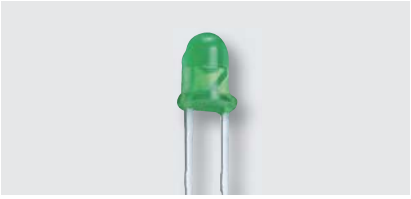

UNIT : mm

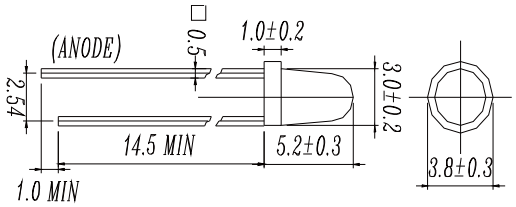

Product	Size (mm)	Color	Lens Type	λ_d (nm)/CIE(x,y)	Resin Color	I_v (Min/Typ/ Max)	V_F (Min/Typ / Max)	Viewing Angle (°)
1224SYGC/S530-E2	3	Super Yellow Green	Round	573	Water Clear	63 / 100	1.7 / 2.0 / 2.4	25
1224USOC/S530-A3	3	Super Sunset Orange	Round	615	Water Clear	188 / 295	1.7 / 2.0 / 2.4	25
1224UTC/S400-A6	3	White	Round	x=0.29 y=0.28	Water Clear	715 / 2850	3.0 / 4.0	25

LED Lamps I 3mm Round Type

UNIT : mm

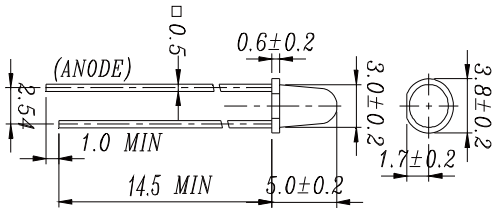

Product	Size (mm)	Color	Lens Type	λ_d (nm) / CIE(x,y)	Resin Color	I_v (Min/Typ/ Max)	V_F (Min/Typ / Max)	Viewing Angle (°)
1254-10SDRD/S530-A3	3	Super Deep Red	Round	639	Color Diffused	100 / 160	2.0 / 2.4	30
1254-10SURD/S530-A3	3	Hyper Red	Round	624	Color Diffused	250/400	2.0 / 2.4	30
1254-10SURT/S530-A3	3	Hyper Red	Round	624	Trans	160 / 320	2.0 / 2.4	30
1254-10SYGD/S530-E2	3	Super Yellow Green	Round	573	Color Diffused	40 / 63	2.0 / 2.4	40
1254-10SYGT/S530-E2	3	Super Yellow Green	Round	573	Trans	160 / 320	2.0 / 2.4	30
1254-10UYD/S530-A3	3	Super Yellow	Round	589	Color Diffused	100 / 200	2.0 / 2.4	30

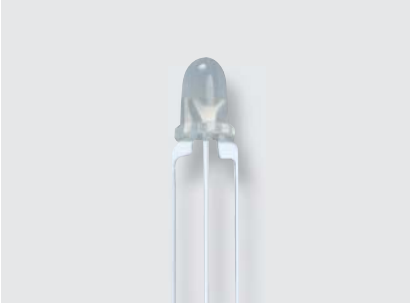

UNIT : mm

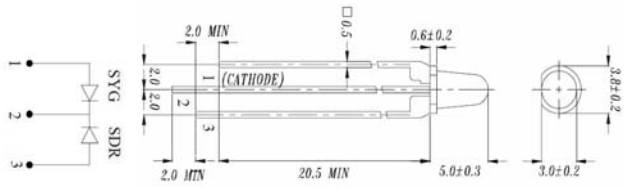

Product	Size (mm)	Color	Lens Type	λ_d (nm)/CIE(x,y)	Resin Color	I_v (Min/Typ/ Max)	V_F (Min/Typ / Max)	Viewing Angle (°)
1259-7SDRSYGW/S530-A3	3	Super Deep Red Super Yellow Green	Round	639 / 573	White Diffused	16 / 32 25 / 50	2.0 / 2.4 2.0 / 2.4	50
1259-7SURSYGW/S530-A3	3	Hyper Red Super Yellow Green	Round	624 / 573	White Diffused	40 / 80 16 / 32	2.0 / 2.4 2.0 / 2.4	60
1259-7UYSYGW/S530-A3	3	Super Yellow Super Yellow Green	Round	589 / 573	White Diffused	63 / 125 40 / 80	2.0 / 2.4 2.0 / 2.4	40

LED Lamps ❙ 3mm Round Type

UNIT : mm

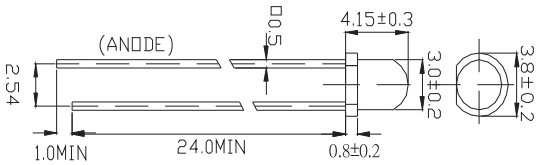

Product	Size (mm)	Color	Lens Type	λ_d (nm)/ CIE(x,y)	Resin Color	I_v (Min/Typ/Max)	V_F (Min/Typ / Max)	Viewing Angle (°)
3294-15SUBC/S400-A6	3	Super Blue	Round	470	Water Clear	160 / 320	3.4 / 4.0	90
3294-15SUGC/S400-A6	3	Super Green	Round	530	Water Clear	500 / 1250	3.4 / 4.0	45
3294-15SURC/S400-A7	3	Hyper Red	Round	624	Water Clear	100 / 200	2.0 / 2.4	90
3294-15UBGC/S400-A6	3	Super Yellow Green	Round	505	Water Clear	400 / 800	3.5 / 4.3	90

UNIT : mm

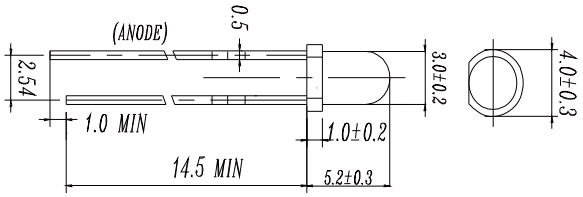

Product	Size (mm)	Color	Lens Type	λ_d (nm)/ CIE(x,y)	Resin Color	I_v (Min/Typ/Max)	V_F (Min/Typ / Max)	Viewing Angle (°)
4204-10SYGC/S530-E4	3	Super Yellow Green	Round	573	Water Clear	250 / 500	2.0 / 2.4	20

LED Lamps ❙ 5mm Round Type

UNIT : mm

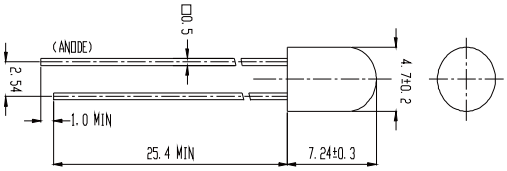

Product	Size (mm)	Color	Lens Type	λ_d (nm)/ CIE(x,y)	Resin Color	I_v (Min/Typ/Max)	V_F (Min/Typ / Max)	Viewing Angle (°)
313-2SYGC/S530-E2	4.7	Super Yellow Green	Round	573	Water Clear	250 / 500	2.0 / 2.4	20
313-2SYGD/S530-E2	4.7	Brilliant Yellow Green	Round	573	Color Diffused	40 / 80	2.0 / 2.4	45
313-2UYD/S530-A3	4.7	Super Yellow	Round	589	Color Diffused	100 / 200	2.0 / 2.4	50

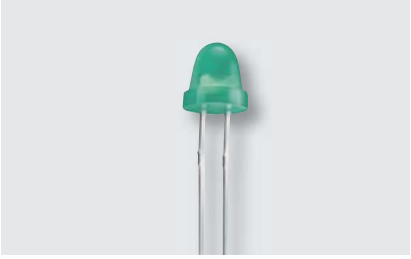

UNIT : mm

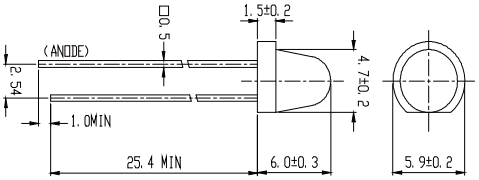

Product	Size (mm)	Color	Lens Type	λ_d (nm)/ CIE(x,y)	Resin Color	I_v (Min/Typ/Max)	V_F (Min/Typ / Max)	Viewing Angle (°)
323-2SURD/S530-A3	4.7	Hyper Red	Round	624	Color Diffused	63 / 100	2.0 / 2.4	40
323-2SYGD/S530-E2	4.7	Super Yellow Green	Round	573	Color Diffused	40 / 80	2.0 / 2.4	60

UNIT : mm

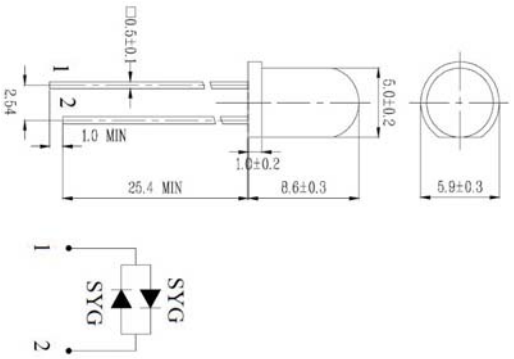

Product	Size (mm)	Color	Lens Type	λ_d (nm)/ CIE(x,y)	Resin Color	I_v (Min/Typ/Max)	V_F (Min/Typ / Max)	Viewing Angle (°)
336SURSYGW/S530-A3	5	Hyper Red/ Super Yellow Green	Round	624 / 573	White Diffused	16 / 32 16 / 32	2.0 / 2.4 2.0 / 2.4	90
336SYGSYGD/S530-E2	5	Super Yellow Green Super Yellow Green	Round	573 / 573	Color Diffused	8 / 16 8 / 16	2.0 / 2.4 2.0 / 2.4	90

LED Lamps ❙ 5mm Round Type

UNIT : mm

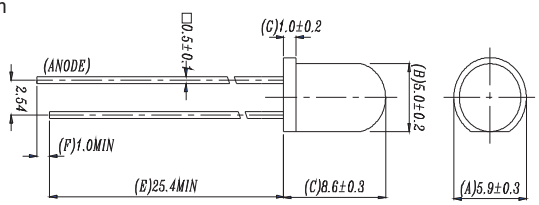

Product	Size (mm)	Color	Lens Type	λ_d (nm)/ CIE(x,y)	Resin Color	I_v (Min/Typ/Max)	V_F (Min/Typ / Max)	Viewing Angle (°)
333-2SDRC/S530-A4	5	Super Deep Red	Round	639	Water Clear	400/1000	1.7/2.0/2.4	10
333-2SDRD/S530-A3	5	Super Deep Red	Round	639	Color Diffused	100/160	2.0 / 2.4	30
333-2SDRT/S530-A3	5	Hyper Red	Round	624	Trans	500/1250	2.0 / 2.4	10
333-2SUBC/C470/S400-A6	5	Blue	Round	470	Water Clear	1000/2000	3.4 / 4.0	10
333-2SUBD/S400-A4	5	Super Blue	Round	470	Color Diffused	400/800	3.4 / 4.0	20
333-2SUBW/C470/S400-A4	5	Super Blue	Round	470	White Diffused	100/200	3.4 / 4.0	40
333-2SUGC/C525	5	Super Green	Round	525	Water Clear	1600/3200	3.5 / 4.3	10
333-2SUGC/S400-A5	5	Super Green	Round	530	Water Clear	4000/8000	3.4 / 4.0	15
333-2SURC/S400-A8	5	Hyper Red	Round	624	Water Clear	3200/5000	2.0 / 2.4	10
333-2SURC/S530-A2	5	Hyper Red	Round	631	Water Clear	344/837	1.7/2.0/2.4	10
333-2SURD/S530-A3	5	Hyper Red	Round	624	Color Diffused	100/200	1.7/2.0/2.4	30
333-2SURT/S530-A3	5	Hyper Red	Round	624	Trans	400/800	2.0 / 2.4	10
333-2SYGC/S530-E2	5	Super Yellow Green	Round	573	Water Clear	400/800	1.7/2.0/2.4	10
333-2SYGD/S530-E2	5	Super Yellow Green	Round	573	Color Diffused	40/80	2.0 / 2.4	30
333-2SYGT/S530-E2	5	Brilliant Yellow Green	Round	573	Trans	250/400	2.0 / 2.4	10
333-2SYGW/S530-E2	5	Super Yellow Green	Round	573	White Diffused	63/125	2.0 / 2.4	35
333-2UBC/C430	5	Blue	Round	466	Water Clear	160/320	3.8 / 4.5	10
333-2UTC/S400-A6	5	White	Round	x=0.29 y=0.30	Water Clear	3600 / 9000	2.8 / 3.6	15
333-2UYC/S400-A4	5	Super Yellow	Round	589	Water Clear	1432/2148	1.7/2.0/2.4	10
333-2UYC/S400-A7	5	Super Yellow	Round	589	Water Clear	2500/4000	2.0 / 2.4	10
333-2UYC/S530-A3	5	Super Yellow	Round	589	Water Clear	630/1600	2.0 / 2.4	10
333-2UYC/S530-A6	5	Super Yellow	Round	589	Water Clear	2000/3200	2.0 / 2.4	10
333-2UYD/S530-A3	5	Super Yellow	Round	589	Color Diffused	160/320	2.0 / 2.4	35

LED Lamps ❙ 5mm Round Type

UNIT : mm

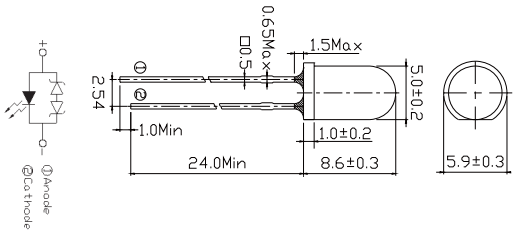

Product	Size (mm)	Color	Lens Type	λ_d (nm)/ CIE(x,y)	Resin Color	I_v (Min/Typ/Max)	V_F (Min/Typ / Max)	Viewing Angle (°)
334-15/T1C1-1VXA	5	White	Round	X:0.29 y:0.28	Water Clear	11250 / 22500	2.8 / 3.6	15
334-15/T1C1-4VXC	5	White	Round	X:0.30 y:0.29	Water Clear	11250 / 22500	2.8 / 3.6	15
334-15/T1C1-7VXC	5	White	Round	X:0.30 y:0.29	Water Clear	11250 / 22500	2.8 / 3.6	15
334-15/T1C3-7TVA	5	White	Round	X:0.30 y:0.29	Water Clear	7150 / 14250	2.8 / 3.6	30
334-15/T1C5-4PRA	5	White	Round	X:0.30 y:0.29	Water Clear	2850 / 5650	2.8 / 3.6	50
334-15/T2C1-1SUB	5	White	Round	X:0.29 y:0.28	Water Clear	5650 / 11250	2.8 / 3.6	15
334-15/T2C1-1UWA	5	White	Round	X:0.29 y:0.28	Water Clear	9000 / 18000	2.8 / 3.6	15
334-15/T2C1-1UWB	5	White	Round	X:0.29 y:0.28	Water Clear	9000 / 18000	2.8 / 3.6	15
334-15/T2C1-2UWC	5	White	Round	X:0.26 y:0.27	Water Clear	9000 / 18000	2.8 / 3.6	15
334-15/T2C1-4UWC	5	White	Round	X:0.30 y:0.29	Water Clear	9000 / 18000	2.8 / 3.6	15
334-15/T2C1-4UWC/R10	5	White	Round	X:0.30 y:0.29	Water Clear	9000 / 18000	2.8 / 3.6	15
334-15/T2C1-7UWC	5	White	Round	X:0.30 y:0.29	Water Clear	9000 / 18000	2.8 / 3.6	15
334-15/T2C2-1TVB	5	White	Round	X:0.29 y:0.28	Water Clear	7150 / 14250	2.8 / 3.6	20
334-15/T2C2-6TVB	5	White	Round	X:0.29 y:0.28	Water Clear	7150 / 14250	2.8 / 3.6	20
334-15/T2C2-6TWB	5	White	Round	X:0.33 y:0.34	Water Clear	7150 / 18000	2.8 / 3.6	20
334-15/T2C2-7TVA	5	White	Round	X:0.29 y:0.28	Water Clear	7150 / 14250	2.8 / 3.6	20
334-15/T2C3-1RTB	5	White	Round	X:0.29 y:0.28	Water Clear	4500 / 9000	2.8 / 3.6	30
334-15/T2C3-2RTC	5	White	Round	X:0.26 y:0.27	Water Clear	4500 / 9000	3.0 / 3.6	30
334-15/T2C3-4RTB	5	White	Round	X:0.30 y:0.29	Water Clear	4500 / 9000	2.8 / 3.6	30
334-15/T2C5-1MQB	5	White	Round	X:0.29 y:0.28	Water Clear	1800 / 4500	2.8 / 3.6	50
334-15/X1C2-1UWA	5	Warm White	Round	X:0.40 y:0.39	Water Clear	9000 / 18000	2.8 / 3.6	20
334-15/X1C5-6QSA	5	Warm White	Round	X:0.40 y:0.39	Water Clear	3600 / 7150	2.8 / 3.6	50
334-15/X2C1-1UWB	5	Warm White	Round	X:0.40 y:0.39	Water Clear	9000 / 18000	2.8 / 3.6	15
334-15/X2C1-4UWA	5	Warm White	Round	X:0.42 y:0.39	Water Clear	9000 / 18000	2.8 / 3.6	15

LED Lamps ❙ 5mm Round Type

UNIT : mm

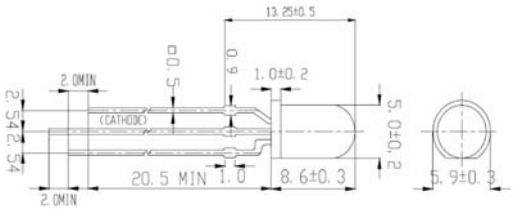

Product	Size (mm)	Color	Lens Type	λ_d (nm)/ CIE(x,y)	Resin Color	I_v (Min/Typ/Max)	V_F (Min/Typ / Max)	Viewing Angle (°)
339-1SURSYGC/S530-A3	5	Hyper Red / Super Yellow Green	Round	624 / 573	Water Clear	160 / 250 40 / 63	2.0 / 2.4 2.0 / 2.4	25
339-1SURSYGW/S530-A3	5	Hyper Red / Super Yellow Green	Round	624 / 573	White Diffused	40 / 80 25 / 50	2.0 / 2.4 2.0 / 2.4	70
339-1UYSYGW/S530-A3	5	Super Yellow / Super Yellow Green	Round	589 / 573	White Diffused	63 / 100 32 / 50	2.0 / 2.4 2.0 / 2.4	70
339-1UYUBW/S530-A4	5	Super Yellow / Blue	Round	589/ 470	White Diffused	25 / 50 16 / 32	2.0 / 2.4 3.5 / 4.3	100

UNIT : mm

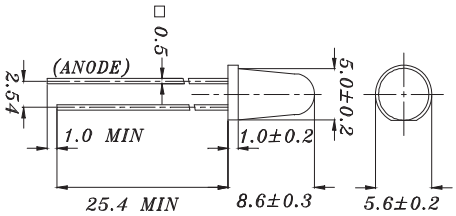

Product	Size (mm)	Color	Lens Type	λ_d (nm)/ CIE(x,y)	Resin Color	I_v (Min/Typ/Max)	V_F (Min/Typ / Max)	Viewing Angle (°)
383-2SUBC/C470/S400-A6	5	Super Blue	Round	470	Water Clear	1600 / 3200	3.4 / 4.0	20
383-2SURC/S400-A6	5	Hyper Red	Round	624	Water Clear	4000 / 6300	2.0 / 2.4	6
383-2SURC/S400-A8	5	Hyper Red	Round	624	Water Clear	6300 / 12500	2.0 / 2.4	6
383-2SURC/S530-A3	5	Hyper Red	Round	624	Water Clear	1000 / 2500	2.0 / 2.4	6
383-2SURC/S530-A6	5	Hyper Red	Round	624	Water Clear	4000 / 6300	2.0 / 2.4	6
383-2SYGC/S530-E2	5	Brilliant Yellow Green	Round	573	Water Clear	160 / 320	2.0 / 2.4	10
383-2SYGD/S530-E2	5	Super Yellow Green	Round	573	Color Diffused	40 / 80	2.0 / 2.4	25
383-2UBC/C470	5	Blue	Round	470	Water Clear	400 / 800	3.5 / 4.3	6
383-2USOC/S530-A6	5	Super Sunset Orange	Round	615	Water Clear	6300 / 8000	2.0 / 2.4	6
383-2UYC/S400-A6	5	Super Yellow	Round	589	Water Clear	4000 / 8000	2.0 / 2.4	6
383-2UYC/S530-A3	5	Super Yellow	Round	589	Water Clear	2713 / 4263	2.0 / 2.4	6

LED Lamps ❙ 5mm Round Type

UNIT : mm

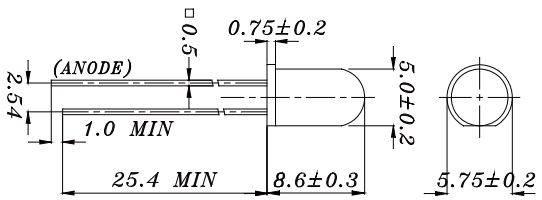

Product	Size (mm)	Color	Lens Type	λ_d (nm)/ CIE(x,y)	Resin Color	I_v (Min/Typ/Max)	V_F (Min/Typ / Max)	Viewing Angle (°)
1383-2SDRD/S530-A3	5	Super Deep Red	Round	639	Color Diffused	160 / 320	2.0 / 2.4	30
1383-2SURD/S530-A3	5	Brilliant Red	Round	624	Color Diffused	250 / 500	2.0 / 2.4	40
1383SDRD/S530-A3	5	Deep Red	Round	639	Color Diffused	160 / 320	2.0 / 2.4	30
1383SURT/S530-A3	5	Hyper Red	Round	624	Trans	400 / 800	2.0 / 2.4	25
1383SYGD/S530-E2	5	Super Yellow Green	Round	573	Color Diffused	100 / 200	2.0 / 2.4	25
1383SYGT/S530-E2	5	Super Yellow Green	Round	573	Trans	630 / 1250	2.0 / 2.4	20
1383UYD/S530-A3	5	Super Yellow	Round	589	Color Diffused	400 / 800	2.0 / 2.4	25

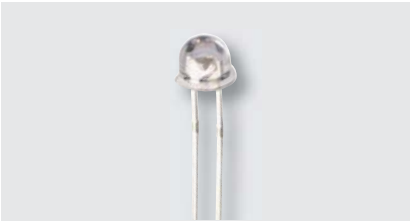

UNIT : mm

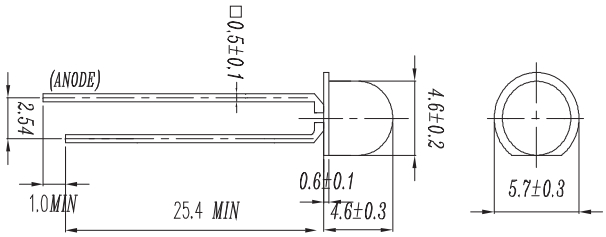

Product	Size (mm)	Color	Lens Type	λ_d (nm)/ CIE(x,y)	Resin Color	I_v (Min/Typ/Max)	V_F (Min/Typ / Max)	Viewing Angle (°)
6324-15SUBC/S400-X10	4.6	Super Blue	Round	470	Water Clear	250 / 500	3.4 / 4.0	60
6324-15SURC/S400-A9	4.6	Hyper Red	Round	624	Water Clear	160 / 320	2.0 / 2.4	100

UNIT : mm

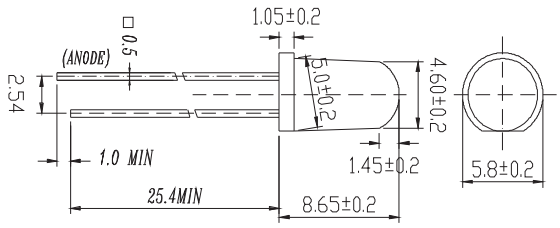

Product	Size (mm)	Color	Lens Type	λ_d (nm)/ CIE(x,y)	Resin Color	I_v (Min/Typ/Max)	V_F (Min/Typ / Max)	Viewing Angle (°)
7343-2SURC/S400-A9	4.6	Hyper Red	Round	624	Water Clear	2500 / 3200	2.0 / 2.4	20
7343-2SURD/S530-A3	4.6	Hyper Red	Round	624	Color Diffused	160 / 320	2.0 / 2.4	40
7343-2SYGD/S530-E3	4.6	Brilliant Yellow Green	Round	573	Color Diffused	63 / 125	2.0 / 2.4	40
7343-2USRC/S1060	4.6	Super Red	Round	631	Water Clear	2500 / 4000	2.0 / 2.6	30
7343-2UYC/H2/S400-A9	4.6	Brilliant Yellow	Round	589	Water Clear	1600 / 2500	2.0 / 2.4	30
7343-2UYC/S1060	4.6	Super Yellow	Round	589	Water Clear	1600 / 2500	2.0 / 2.6	30
7343-2UYC/S400-A9	4.6	Brilliant Yellow	Round	589	Water Clear	1600 / 3200	2.0 / 2.4	30
7343-2UYC/S530-A3	4.6	Super Yellow	Round	589	Water Clear	1000 / 2000	2.0 / 2.4	15

LED Lamps ❙ 5mm Round Type

UNIT : mm

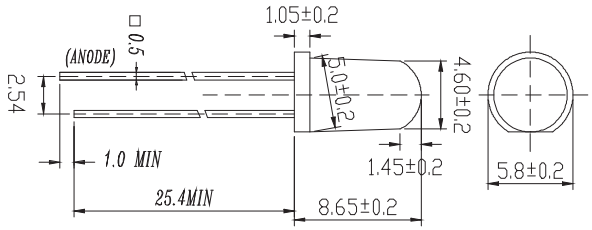

Product	Size (mm)	Color	Lens Type	λ_d (nm)/ CIE(x,y)	Resin Color	I_v (Min/Typ/Max)	V_F (Min/Typ / Max)	Viewing Angle (°)
7344-15SUBC/C470/S400-A6	4.6	Super Blue	Round	470	Water Clear	1000 / 2000	3.4 / 4.0	30
7344-15SUGC/S400-A5	4.6	Super Green	Round	530	Water Clear	5000 / 8000	3.4 / 4.0	30
7344-15SUGC/S400-X6	4.6	Super Green	Round	530	Water Clear	8000 / 11000	3.4 / 4.0	20

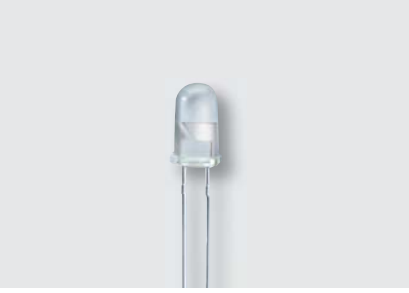

UNIT : mm

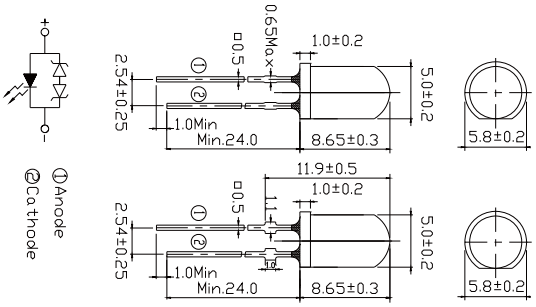

Product	Size (mm)	Color	Lens Type	λ_d (nm)/ CIE(x,y)	Resin Color	I_v (Min/Typ/Max)	V_F (Min/Typ / Max)	Viewing Angle (°)
7383/R2C3-AMQB/P	5	Brilliant Red	Round	618~628	Water Clear	2850 / 4500 / 7150	1.8 / 2.0 /2.6	30
7383USRW/S1089-2	5	Super Red	Round	628	White Diffused	--	1.7 / 2.0 / 2.6	30

LED Lamps ❙ 8mm Round Type

UNIT : mm

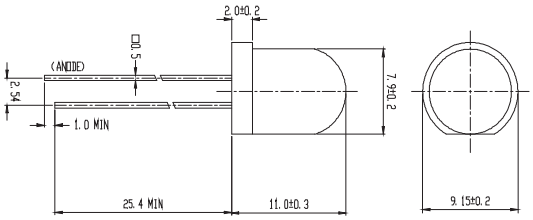

Product	Size (mm)	Color	Lens Type	λ_d (nm)/ CIE(x,y)	Resin Color	I_v (Min/Typ/Max)	V_F (Min/Typ / Max)	Viewing Angle (°)
393-2SURD/S530-A3	7.9	Hyper Red	Round	624	Color Diffused	63 / 125	2.0 / 2.4	60
393UYD/S530-A3	7.9	Super Yellow	Round	589	Color Diffused	80 / 125	2.0 / 2.4	60

LED Lamps ❙ 10mm Round Type

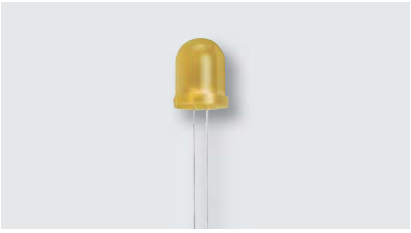

UNIT : mm

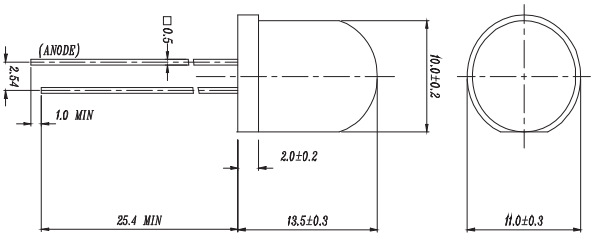

Product	Size (mm)	Color	Lens Type	λ_d (nm)/ CIE(x,y)	Resin Color	I_v (Min/Typ/Max)	V_F (Min/Typ / Max)	Viewing Angle (°)
363-2SURD/S530-A3	10	Brilliant Red	Round	624	Color Diffused	63 / 125	2.0 / 2.4	40
363-2SYGD/S530-E2	10	Super Yellow Green	Round	573	Color Diffused	16 / 32	2.0 / 2.4	30
363SYGD/S530-E2	10	Super Yellow Green	Round	573	Color Diffused	16 / 32	2.0 / 2.4	40

LED Lamps I 3mm Cylindrical

UNIT : mm

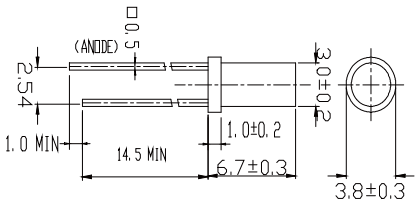

Product	Size (mm)	Color	Lens Type	λ_d (nm)/ CIE(x,y)	Resin Color	I_v (Min/Typ/Max)	V_F (Min/Typ / Max)	Viewing Angle (°)
414-10UYD/S530-A3	3	Super Yellow	Cylindrical	589	Color Diffused	25 / 40	2.0 / 2.4	120

LED Lamps I 5mm Cylindrical

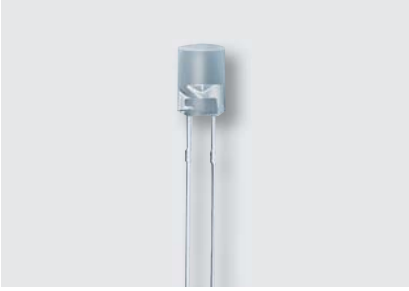

UNIT : mm

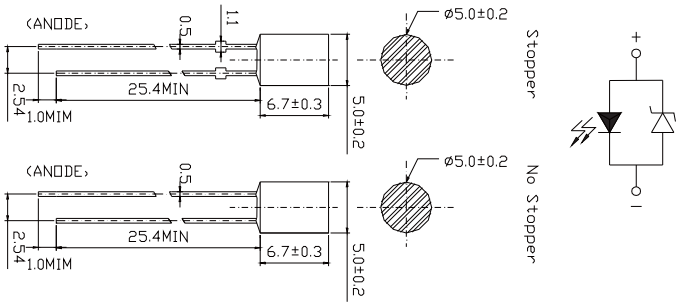

Product	Size (mm)	Color	Lens Type	λ_d (nm)/ CIE(x,y)	Resin Color	I_v (Min/Typ/Max)	V_F (Min/Typ / Max)	Viewing Angle (°)
423-2ASUGC/S400-A6-P/TR1(A)	5	Super Green	Cylindrical	525	Water Clear	450 / 565	3.5/3.9	90
423-2UYC/S530-A6	5	Super Yellow	Cylindrical	589	Water Clear	100 / 200	2.0 /2.4	90

LED Lamps I 5mm Square

UNIT : mm

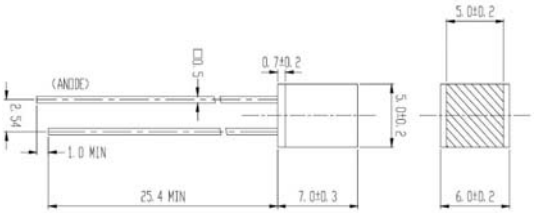

Product	Size (mm)	Color	Lens Type	λ_d (nm)/ CIE(x,y)	Resin Color	I_v (Min/Typ/Max)	V_F (Min/Typ / Max)	Viewing Angle (°)
583SURD/S530-A3	5.0 x 5.0	Hyper Red	Square	624	Color Diffused	12.5 / 20	2.0 / 2.4	130
583SYGD/S530-E2	5.0 x 5.0	Super Yellow Green	square	573	Color Diffused	2.5 / 5.0	2.0 / 2.4	170
583UYD/S530-A3	5.0 x 5.0	Super Yellow	Square	589	Color Diffused	10 / 20	2.0 / 2.4	170

LED Lamps ❙ Rectangular

UNIT : mm

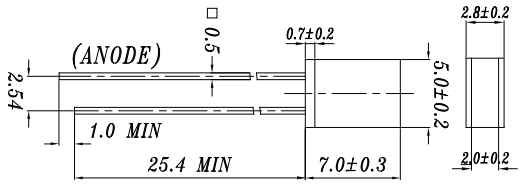

Product	Size (mm)	Color	Lens Type	λ_d (nm)/ CIE(x,y)	Resin Color	I_v (Min/Typ/Max)	V_F (Min/Typ / Max)	Viewing Angle (°)
513SURD/S530-A3	2.0 x 5.0	Hyper Red	Rectangle	624	Color Diffused	10 / 20	2.0 / 2.4	180
513SYGD/S530-E2	2.0 x 5.0	Super Yellow Green	Rectangle	573	Color Diffused	6.3 / 12.5	2.0 /2.4	140

UNIT : mm

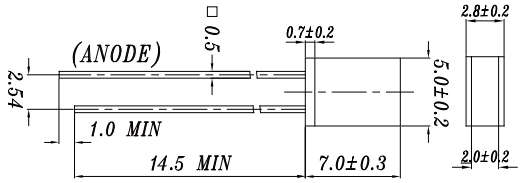

Product	Size (mm)	Color	Lens Type	λ_d (nm)/ CIE(x,y)	Resin Color	I_v (Min/Typ/ Max)	V_F (Min/Typ / Max)	Viewing Angle (°)
514SURD/S530-A3	2.0 x 5.0	Hyper Red	Rectangle	624	Color Diffused	10 / 20	2.0 /2.4	180
514SYGD/S530-E2	2.0 x 5.0	Super Yellow Green	Rectangle	573	Color Diffused	2.5 / 5.0	2.0 / 2.4	180
514UYD/S530-A3	2.0 x 5.0	Super Yellow	Rectangle	589	Color Diffused	10 / 20	2.0 /2.4	180

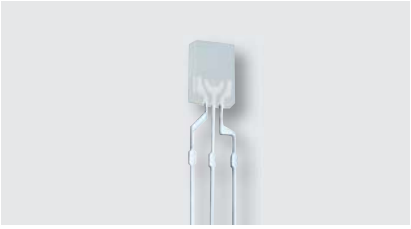

UNIT : mm

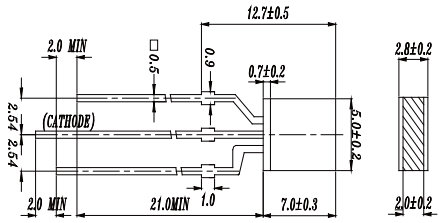

Product	Size (mm)	Color	Lens Type	λ_d (nm)/ CIE(x,y)	Resin Color	I_v (Min/Typ/ Max)	V_F (Min/Typ / Max)	Viewing Angle (°)
519-1SURSYGW/S530-A3	2.0 x 5.0	Hyper Red / Super Yellow Green	Rectangle	624 / 573	White Diffused	6.3 / 12.5 2.5 / 5.0	2.0 / 2.4 2.0 / 2.4	180

LED Lamps ❙ Rectangular

UNIT : mm

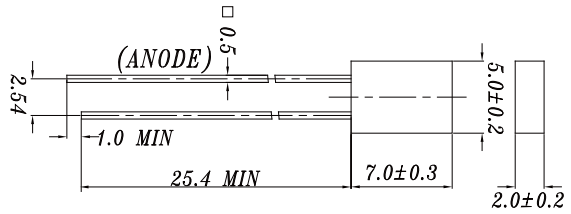

Product	Size (mm)	Color	Lens Type	λ_d (nm)/ CIE(x,y)	Resin Color	I_v (Min/Typ/ Max)	V_F (Min/Typ / Max)	Viewing Angle (°)
523-2SDRD/S530-A3	2.0 x 5.0	Super Deep Red	Rectangle	639	Color Diffused	10 / 16	2.0 / 2.4	120
523-2SURD/S530-A3	2.0 x 5.0	Hyper Red	Rectangle	624	Color Diffused	16 / 32	2.0 / 2.4	120
523-2UYD/S530-A3	2.0 x 5.0	Super Yellow	Rectangle	589	Color Diffused	6.3 / 12.5	2.0 /2.4	180
523SURD/S530-A3	2.0 x 5.0	Hyper Red	Rectangle	624	Color Diffused	16 / 25	2.0 / 2.4	170
523SYGD/S530-E2	2.0 x 5.0	Super Yellow Green	Rectangle	573	Color Diffused	4 / 8	2.0 / 2.4	150
523UYD/S530-A3	2.0 x 5.0	Super Yellow	Rectangle	589	Color Diffused	16 / 32	2.0 / 2.4	180

UNIT : mm

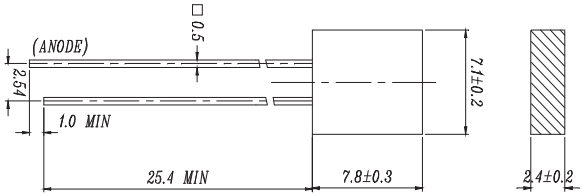

Product	Size (mm)	Color	Lens Type	λ_d (nm)/ CIE(x,y)	Resin Color	I_v (Min/Typ/ Max)	V_F (Min/Typ / Max)	Viewing Angle (°)
573SURD/S530-A3	2.4 x 7.1	Hyper Red	Rectangular	624	Color Diffused	16 / 25	1.7 / 2.0 / 2.4	120
573SYGD/S530-E2	2.4 x 7.1	Super Yellow Green	Rectangular	573	Color Diffused	2.5 / 5.0	2.0 /2.4	180

UNIT : mm

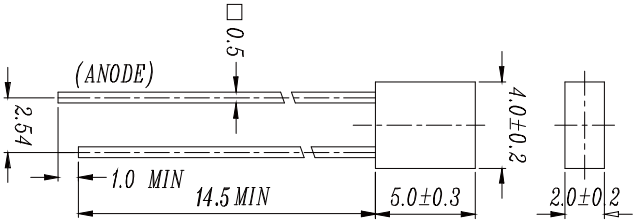

Product	Size (mm)	Color	Lens Type	λ_d (nm)/ CIE(x,y)	Resin Color	I_v (Min/Typ/ Max)	V_F (Min/Typ / Max)	Viewing Angle (°)
594SUBC/C470/S400-A4	2.0 x 4.0	Super Blue	Rectangular	470	Water Clear	40 / 63	3.4 / 4.0	100
594SURD/S530-A3	2.0 x 4.0	Hyper Red	Rectangular	624	Color Diffused	10 / 16	2.0 / 2.4	170
594SYGD/S530-E2	2.0 x 4.0	Super Yellow Green	Rectangular	573	Color Diffused	4.0 / 8.0	2.0 / 2.4	180
594UYD/S530-A3	2.0 x 4.0	Super Yellow	Rectangular	589	Color Diffused	10 / 20	2.0 / 2.4	180

LED Lamps ❙ Rectangular

UNIT : mm

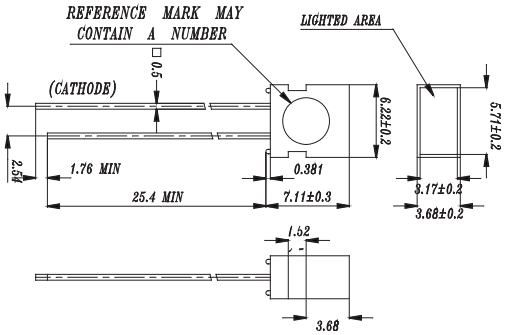

Product	Size (mm)	Color	Lens Type	λ_d (nm)/ CIE(x,y)	Resin Color	I_v (Min/Typ/ Max)	V_F (Min/Typ / Max)	Viewing Angle (°)
1003SURD/S530-A3	3.68x6.22	Hyper Red	Rectangular	624	Color Diffused	25 / 50	2.0 / 2.4	110
1003SYGD/S530-E2	3.68x6.22	Super Yellow Green	Rectangular	573	Color Diffused	6.3 / 12.5	2.0 / 2.4	110
1003UYD/S530-A3	3.68x6.22	Super Yellow	Rectangular	589	Color Diffused	25 / 50	2.0 / 2.4	110

UNIT : mm

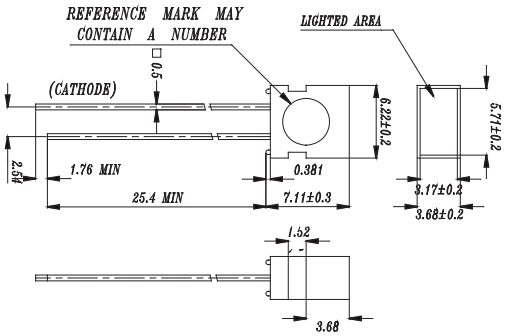

Product	Size (mm)	Color	Lens Type	λ_d (nm)/ CIE(x,y)	Resin Color	I_v (Min/Typ/ Max)	V_F (Min/Typ / Max)	Viewing Angle (°)
1006SYGSURW/S530-A3	3.68x6.22	Super Yellow Green / Hyper Red	Rectangular	573 / 624	White Diffused	10 / 20 25 / 50	2.0 / 2.4 2.0 / 2.4	120

UNIT : mm

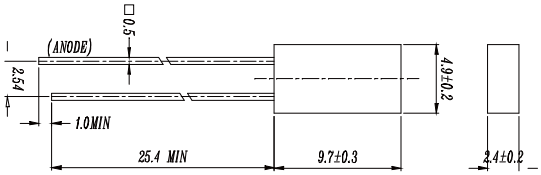

Product	Size (mm)	Color	Lens Type	λ_d (nm)/ CIE(x,y)	Resin Color	I_v (Min/Typ/ Max)	V_F (Min/Typ / Max)	Viewing Angle (°)
1533SYGD/S530-E2/O	2.4 x 4.9	Super Yellow Green	Round	573	Color Diffused	2.5 / 5.0	2.0 / 2.4	180

LED Lamps ❙ 3mm Assembly LED

UNIT : mm

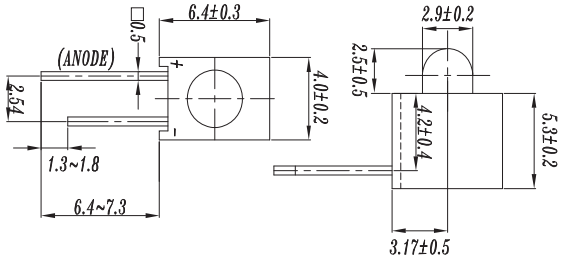

Product	Size (mm)	Color	Lens Type	λ_d (nm)/ CIE(x,y)	Resin Color	I_v (Min/Typ/ Max)	V_F (Min/Typ / Max)	Viewing Angle (°)
A214B/SUR/S530-A3	3	Hyper Red	Round	624	Color Diffused	63 / 120	2.0 / 2.4	60
A214B/SYG/S530-E2	3	Super Yellow Green	Round	573	Color Diffused	16 / 32	2.0 / 2.4	60
A214B/UY/S530-A3	3	Super Yellow	Round	589	Color Diffused	50 / 100	2.0 / 2.4	60

UNIT : mm

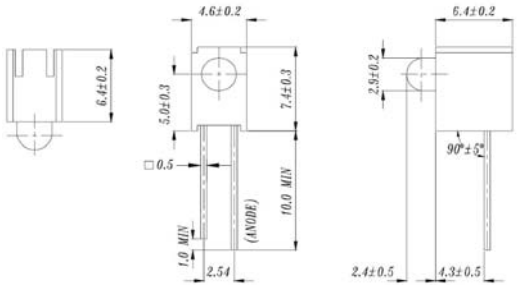

Product	Size (mm)	Color	Lens Type	λ_d (nm)/ CIE(x,y)	Resin Color	I_v (Min/Typ/ Max)	V_F (Min/Typ / Max)	Viewing Angle (°)
A264B/SUB/S400-A4	3	Super Blue	Round	470	Color Diffused	160 / 250	3.4 / 4.0	35
A264B/SUR/S530-A3	3	Hyper Red	Round	624	Color Diffused	63 / 120	2.0 / 2.4	60
A264B/SYG/S530-E2	3	Super Yellow Green	Round	573	Color Diffused	25 / 50	2.0 / 2.4	60
A264B/UY/S530-A3	3	Super Yellow	Round	589	Color Diffused	50 / 100	2.0 / 2.4	60

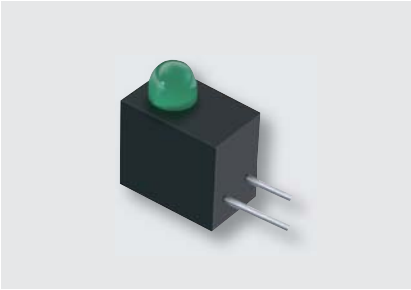

UNIT : mm

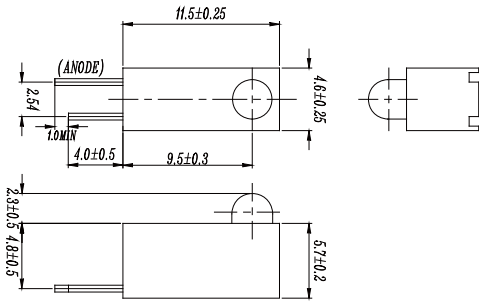

Product	Size (mm)	Color	Lens Type	λ_d (nm)/ CIE(x,y)	Resin Color	I_v (Min/Typ/ Max)	V_F (Min/Typ / Max)	Viewing Angle (°)
A274B/SYG/S530-E2	3	Super Yellow Green	Round	573	Color Diffused	25 / 50	2.0/ 2.4	60

LED Lamps ❙ 3mm Assembly LED

UNIT : mm

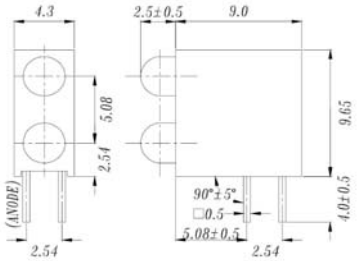

Product	Size (mm)	Color	Lens Type	λ_d (nm)/ CIE(x,y)	Resin Color	I_v (Min/Typ/ Max)	V_F (Min/Typ / Max)	Viewing Angle (°)
A694B/2SUR/S530-A3	3	Hyper Red	Round	624	Color Diffused	10 / 25	2.0 / 2.4	60
A694B/2SYG/S530-E2	3	Super Yellow Green	Round	573	Color Diffused	25 / 50	2.0 / 2.4	60
A694B/2UY/S530-A3	3	Super Yellow	Round	589	Color Diffused	16 / 32	2.0 / 2.4	60
A694B/SURSYG/S530-A3	3	Hyper Red/ Super Yellow Green	Round	624 / 573	Color Diffused	40 / 80 25 / 50	2.0 / 2.4 2.0 / 2.4	60 / 60
A694B/SYGUY/S530-A3	3	Super Yellow Green / Super Yellow	Round	573 / 589	Color Diffused	25 / 50 40 / 80	2.0 / 2.4 2.0 / 2.4	60 / 60

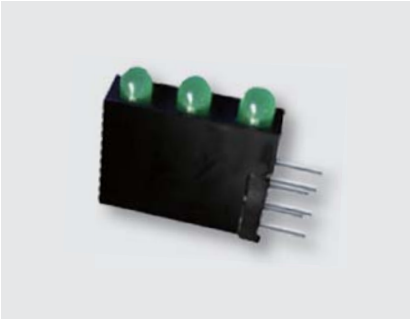

UNIT : mm

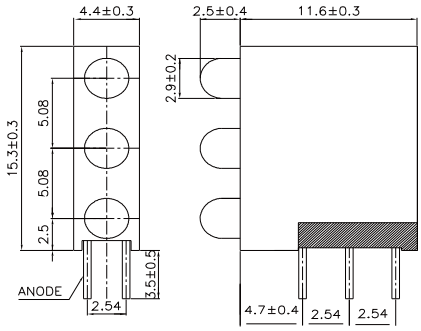

Product	Size (mm)	Color	Lens Type	λ_d (nm)/ CIE(x,y)	Resin Color	I_v (Min/Typ/ Max)	V_F (Min/Typ / Max)	Viewing Angle (°)
A1394B/3SYG/S530-E2	3	Super Yellow Green	Round	573	Color Diffused	25 / 50	2.0 / 2.4	60

LED Lamps ❙ 3mm Assembly LED

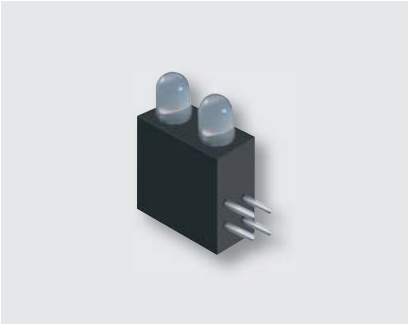

UNIT : mm

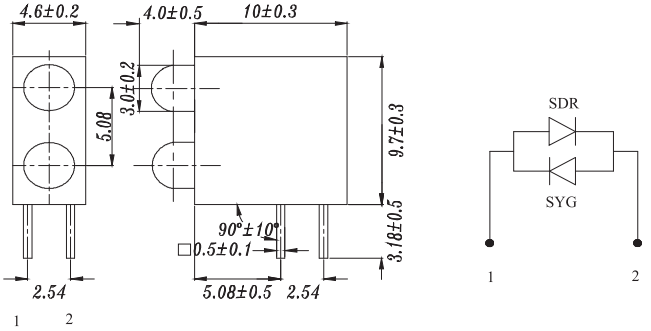

Product	Size (mm)	Color	Lens Type	λ_d (nm)/ CIE(x,y)	Resin Color	I_v (Min/Typ/ Max)	V_F (Min/Typ / Max)	Viewing Angle (°)
A2784B/2SYGSDRW/ S530-A3	3	Super Yellow Green Super Deep Red	Round	573 / 639	White Diffused	16 / 32 25 / 50	2.0 / 2.4 2.0 / 2.4	50

UNIT : mm

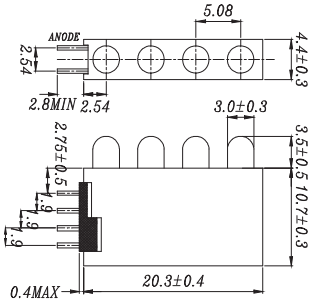

Product	Size (mm)	Color	Lens Type	λ_d (nm)/ CIE(x,y)	Resin Color	I_v (Min/Typ/ Max)	V_F (Min/Typ / Max)	Viewing Angle (°)
A1844B/4SYG/S530-E2	3	Super Yellow Green	Round	573	Color Diffused	16 / 32	2.0 / 2.4	60

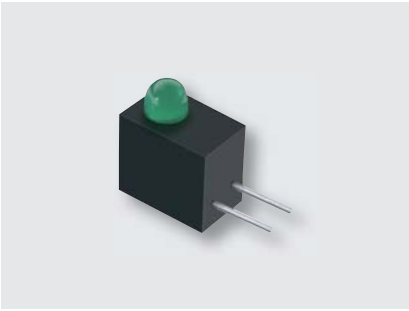

UNIT : mm

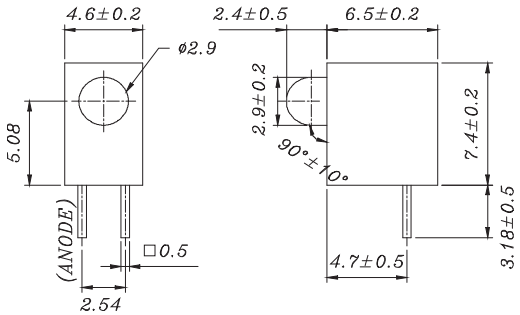

Product	Size (mm)	Color	Lens Type	λ_d (nm)/ CIE(x,y)	Resin Color	I_v (Min/Typ/ Max)	V_F (Min/Typ / Max)	Viewing Angle (°)
A2774B/SYG/S530-E2	2.9	Super Yellow Green	Round	573	Color Diffused	25 / 50	2.0 / 2.4	60

LED Lamps ❙ 5mm Assembly LED

UNIT : mm

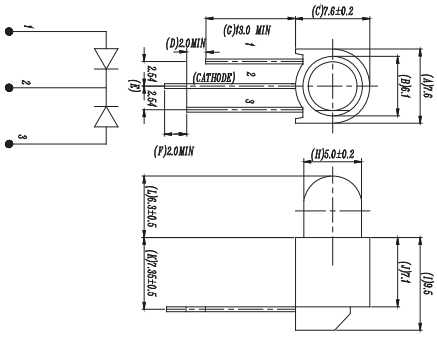

Product	Size (mm)	Color	Lens Type	λ_d (nm)/ CIE(x,y)	Resin Color	I_V (Min/Typ/ Max)	V_F (Min/Typ / Max)	Viewing Angle (°)
A1479-1B/SURSYGW/ S530-A3	5	● Hyper Red / ● Super Yellow Green	Round	624 / 573	White Diffused	25 / 50 16 / 32	2.0 / 2.4 2.0 / 2.4	100

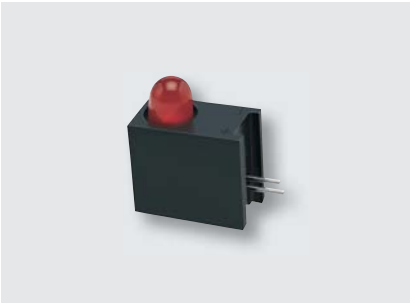

UNIT : mm

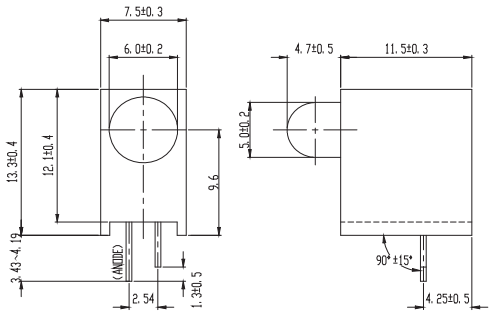

Product	Size (mm)	Color	Lens Type	λ_d (nm)/ CIE(x,y)	Resin Color	I_V (Min/Typ/ Max)	V_F (Min/Typ / Max)	Viewing Angle (°)
A203B/SUR/S530-A3	5	● Hyper Red	Round	624	Color Diffused	100 / 200	2.0 / 2.4	30
A203B/SYG/S530-E2	5	● Super Yellow Green	Round	573	Color Diffused	40 / 80	2.0 / 2.4	45
A203B/UY/S530-A3	5	● Super Yellow	Round	589	Color Diffused	100 / 200	2.0 / 2.4	30

LED Lamps ❙ 5mm Assembly LED

UNIT : mm

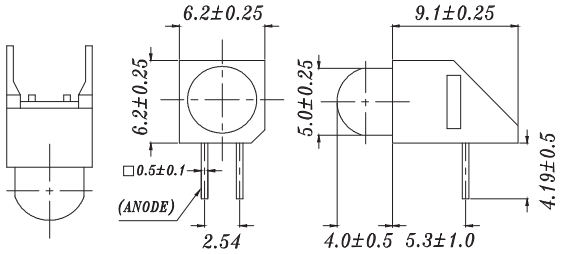

Product	Size (mm)	Color	Lens Type	λ_d (nm)/ CIE(x,y)	Resin Color	I_v (Min/Typ/ Max)	V_F (Min/Typ / Max)	Viewing Angle (°)
A253B/SUR/S530-A3	5	● Hyper Red	Round	624	Color Diffused	100 / 200	2.0 / 2.4	30
A253B/SYG/S530-E2	5	● Super Yellow Green	Round	573	Color Diffused	40 / 80	2.0 / 2.4	45

UNIT : mm

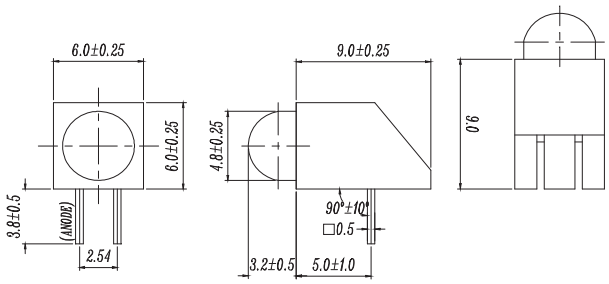

Product	Size (mm)	Color	Lens Type	λ_d (nm)/ CIE(x,y)	Resin Color	I_v (Min/Typ/ Max)	V_F (Min/Typ / Max)	Viewing Angle (°)
A93B/SUR/S530-A3	4.7	● Hyper Red	Round	624	Color Diffused	100 / 250	2.0 / 2.4	40

LED Digital Displays ❙ Chip On Board Display ❙ Single Digit Display

UNIT : mm

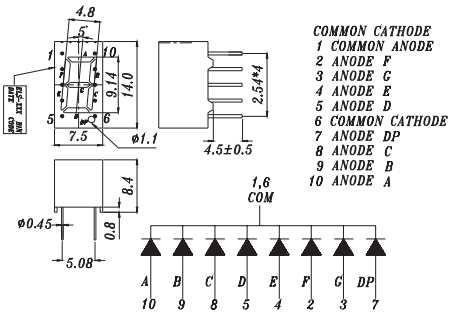

Product	Segement Height mm (inch)	Color	Segement Width	CC/CA	λ_d (nm)	Resin Color	Face Color	I_v (Min/Typ) (mcd)
S315SURWA/S530-A3	9.14 (0.3)	● Red	4.8	CC	624	White	Gray	4.0 / 8.0
S315SYGWA/S530-E2	9.14 (0.3)	● Green	4.8	CC	573	White	Gray	2.0 / 3.2

UNIT : mm

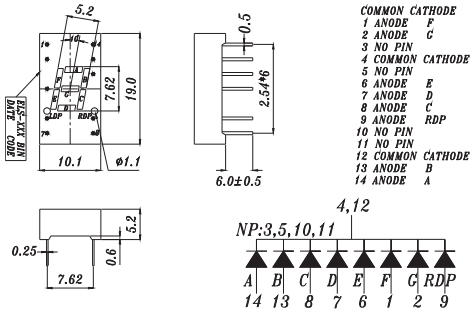

Product	Segement Height mm (inch)	Color	Segement Width	CC/CA	λ_d (nm)	Resin Color	Face Color	I_v (Min/Typ) (mcd)
S321SURWA/S530-A3	7.62 (0.3)	● Red	5.2	CC	624	White	Gray	4.0 / 8.9
S321USOWA/S530-A4	7.62 (0.3)	● Orange	5.2	CC	615	White	Gray	7.8 / 17.6
S321SYGWA/S530-E2	7.62 (0.3)	● Green	5.2	CC	573	White	Gray	2.8 / 6.4

UNIT : mm

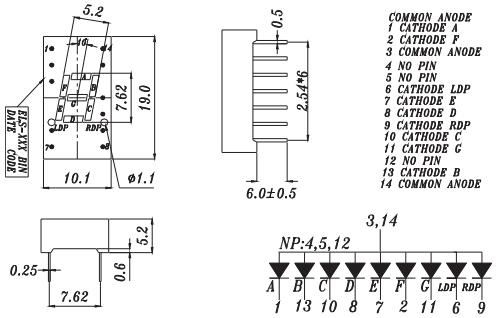

Product	Segement Height mm (inch)	Color	Segement Width	CC/CA	λ_d (nm)	Resin Color	Face Color	I_v (Min/Typ) (mcd)
S322SURWA/S530-A3	7.62 (0.3)	● Red	5.2	CA	624	White	Gray	5.6 / 11.0
S322USOWA/S530-A4	7.62 (0.3)	● Orange	5.2	CA	615	White	Gray	7.8 / 17.6
S322SYGWA/S530-E2	7.62 (0.3)	● Green	5.2	CA	573	White	Gray	2.0 / 4.5
S322UBWA/C470	7.62 (0.3)	● Blue	5.2	CA	468	White	Gray	7.8 / 17.6

LED Digital Displays ❙ Chip On Board Display ❙ Single Digit Display

UNIT : mm

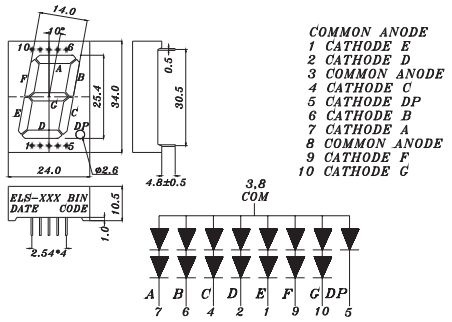

Product	Segement Height mm (inch)	Color	Segement Width	CC/CA	λ_d (nm)	Resin Color	Face Color	I_v (Min/Typ) (mcd)
S1006SURWA/S530-A3	25.4 (1)	● Red	14	CA	624	White	Gray	15 / 24

UNIT : mm

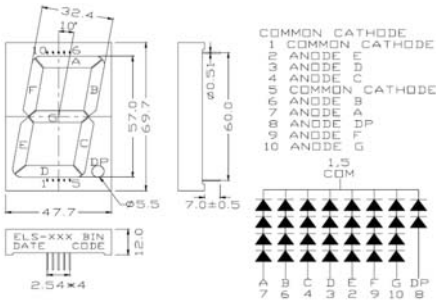

Product	Segement Height mm (inch)	Color	Segement Width	CC/CA	λ_d (nm)	Resin Color	Face Color	I_v (Min/Typ) (mcd)
S2325SURWA/S530-A3	57 (2)	● Red	32.4	CC	624	White	Gray	15 / 34

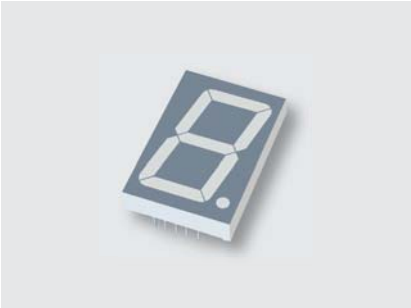

UNIT : mm

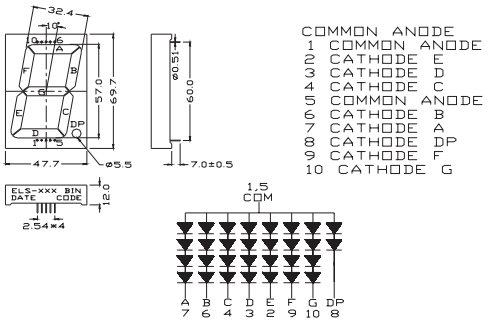

Product	Segement Height mm (inch)	Color	Segement Width	CC/CA	λ_d (nm)	Resin Color	Face Color	I_v (Min/Typ) (mcd)
S2326SURWA/S530-A3	57 (2)	● Red	32.4	CA	624	White	Gray	15 / 34
S2326USOWA/S530-A4	57 (2)	● Orange	32.4	CA	615	White	Gray	30 / 67
S2326SYGWA/S530-E2	57 (2)	● Green	32.4	CA	573	White	Gray	5.6 / 12.5
S2326UBWA/C470	57 (2)	● Blue	32.4	CA	468	White	Gray	15 / 34

LED Digital Displays ❙ Chip On Board Display ❙ Single Digit Display

UNIT : mm

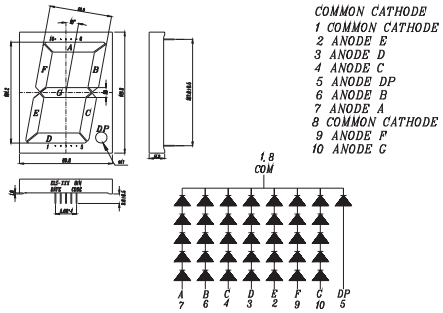

Product	Segement Height mm (inch)	Color	Segement Width	CC/CA	λ_d (nm)	Resin Color	Face Color	I_v (Min/Typ) (mcd)
S4005USOWA/S530-A3	101.2 (4)	Orange	59.9	CC	615	White	Gray	15 / 34
S4005SYGWA/S530-E2	101.2 (4)	Green	59.9	CC	573	White	Gray	4.0 / 6.4

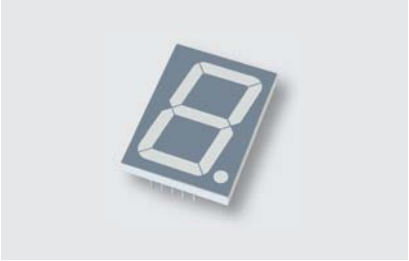

UNIT : mm

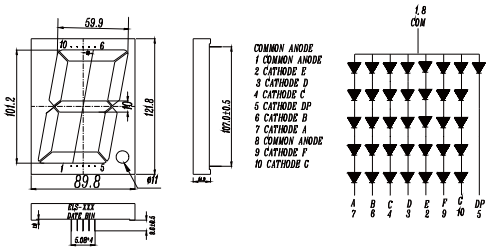

Product	Segement Height mm (inch)	Color	Segement Width	CC/CA	λ_d (nm)	Resin Color	Face Color	I_v (Min/Typ) (mcd)
S4006SURWA/S530-A3	101.2 (4)	Red	59.9	CA	624	White	Gray	15 / 34
S4006USOWA/S530-A4	101.2 (4)	Orange	59.9	CA	615	White	Gray	15 / 34

LED Digital Displays ❙ Chip On Board Display ❙ Dual Digit Display

UNIT : mm

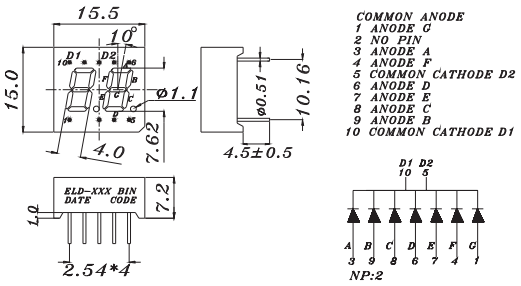

Product	Segement Height mm (inch)	Color	Segement Width	CC/CA	λ_d (nm)	Resin Color	Face Color	I_v (Min/Typ) (mcd)
D305SURWA/S530-A3	7.62 (0.3)	● Red	4	CC	624	White	Gray	4.0 / 6.4

UNIT : mm

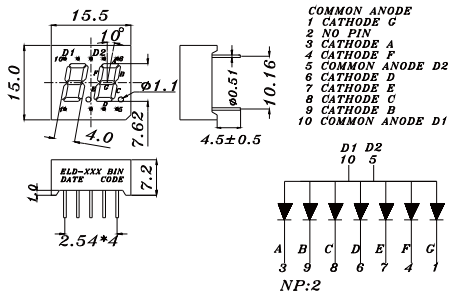

Product	Segement Height mm (inch)	Color	Segement Width	CC/CA	λ_d (nm)	Resin Color	Face Color	I_v (Min/Typ) (mcd)
D306SURWA/S530-A3	7.62 (0.3)	● Red	4	CA	624	White	Gray	4.0 / 6.4

UNIT : mm

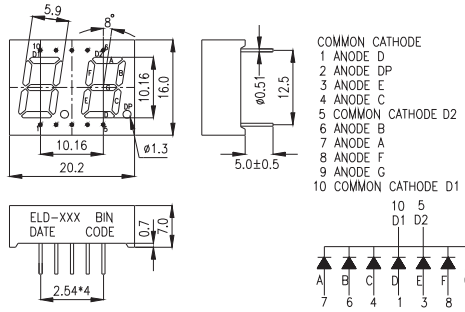

Product	Segement Height mm (inch)	Color	Segement Width	CC/CA	λ_d (nm)	Resin Color	Face Color	I_v (Min/Typ) (mcd)
D425SURWA/S530-A3	10.16 (0.4)	● Red	5.9	CC	624	White	Gray	7.8 / 15.0
D425USOWA/S530-A4	10.16 (0.4)	● Orange	5.9	CC	615	White	Gray	11.0 / 24.0
D425SYGWA/S530-E2	10.16 (0.4)	● Green	5.9	CC	573	White	Gray	2.0 / 3.2

LED Digital Displays ❙ Chip On Board Display ❙ Dual Digit Display

UNIT : mm

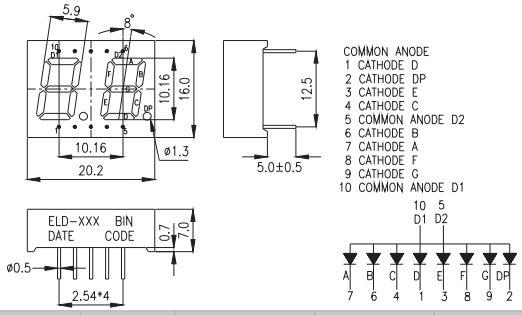

Product	Segement Height mm (inch)	Color	Segement Width	CC/CA	λ_d (nm)	Resin Color	Face Color	I_v (Min/Typ) (mcd)
D426SURWB/S530-A3	10.16 (0.4)	● Red	5.9	CA	624	White	Black	7.8 / 15
D426USOWA/S530-A3	10.16 (0.4)	● Orange	5.9	CA	615	White	Gray	11.0 / 24.0
D426UYOWB/S530-A3	10.16 (0.4)	● Brilliant Orange	5.9	CA	589	White	Black	5.6 / 12.5
D426SYGWA/S530-E2	10.16 (0.4)	● Green	5.9	CA	573	White	Gray	2.0 / 3.2

UNIT : mm

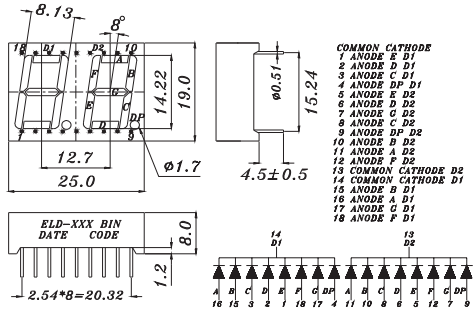

Product	Segement Height mm (inch)	Color	Segement Width	CC/CA	λ_d (nm)	Resin Color	Face Color	I_v (Min/Typ) (mcd)
D511SURWB/S530-A3	14.22 (0.5)	● Red	8.13	CC	624	White	Black	7.8 / 15.0

UNIT : mm

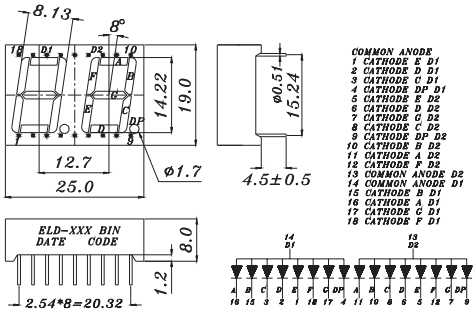

Product	Segement Height mm (inch)	Color	Segement Width	CC/CA	λ_d (nm)	Resin Color	Face Color	I_v (Min/Typ) (mcd)
D512SURWB/S530-A3	14.22 (0.5)	● Red	8.13	CA	624	White	Black	7.8 / 15.0
D512UBWA/C470	14.22 (0.5)	● Blue	8.13	CA	470	White	Gray	4.0 / 6.4

LED Digital Displays ❙ Chip On Board Display ❙ Dual Digit Display

UNIT : mm

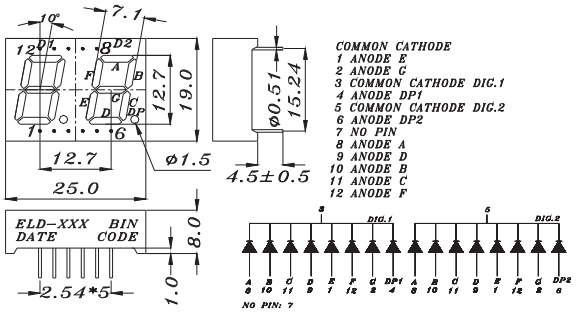

Product	Segement Height mm (inch)	Color	Segement Width	CC/CA	λ_d (nm)	Resin Color	Face Color	I_v (Min/Typ) (mcd)
D515SURWA/S530-A3	12.7 (0.5)	● Red	7.1	CC	624	White	Gray	7.8 / 15.0

UNIT : mm

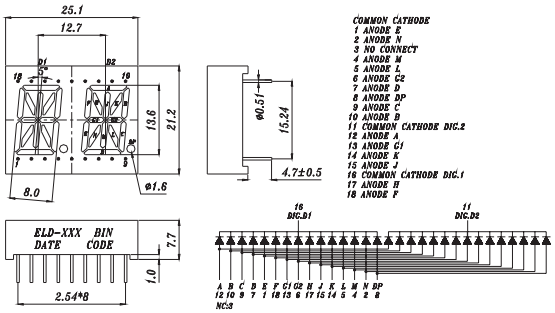

Product	Segement Height mm (inch)	Color	Segement Width	CC/CA	λ_d (nm)	Resin Color	Face Color	I_v (Min/Typ) (mcd)
D525SURWA/S530-A3	13.6 (0.5)	● Red	8	CC	624	White	Gray	7.8 / 12.5
D525SYGWA/S530-E2	13.6 (0.5)	● Green	8	CC	573	White	Gray	2.8 / 4.5
D525USOWA/S530-A3	13.6 (0.5)	● Orange	8	CC	615	White	Gray	5.6 / 12.5

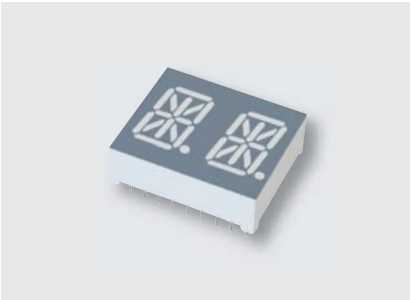

UNIT : mm

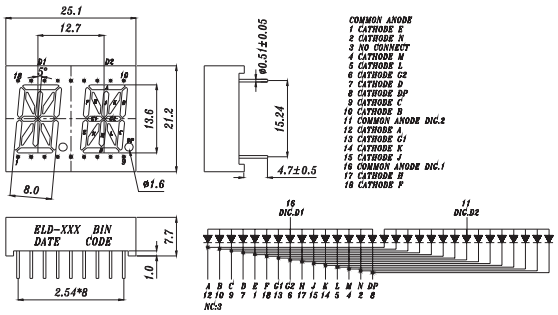

Product	Segement Height mm (inch)	Color	Segement Width	CC/CA	λ_d (nm)	Resin Color	Face Color	I_v (Min/Typ) (mcd)
D526SURWA/S530-A3	13.6 (0.5)	● Red	8	CA	624	White	Gray	7.8 / 12.5

LED Digital Displays ❙ Chip On Board Display ❙ Three Digit Display

UNIT : mm

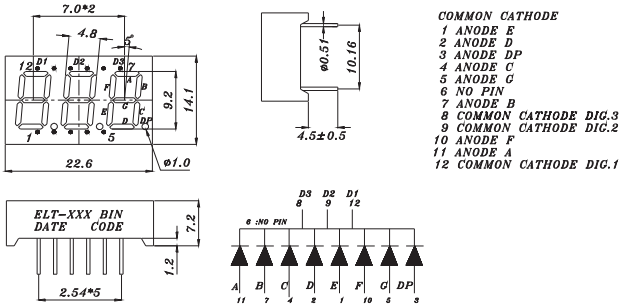

Product	Segement Height mm (inch)	Color	Segement Width	CC/CA	λ_d (nm)	Resin Color	Face Color	I_v (Min/Typ) (mcd)
T315SYGWA/S530-E2	9.2 (0.3)	● Green	4.8	CC	573	White	Gray	1.4 / 3.2

UNIT : mm

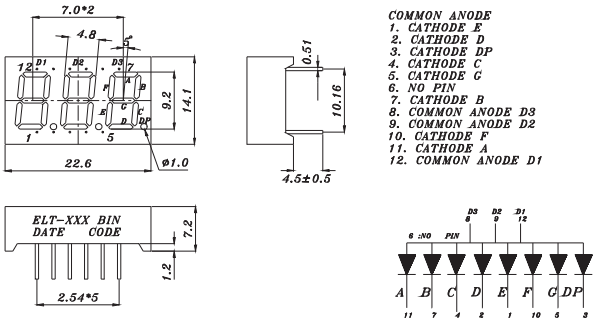

Product	Segement Height mm (inch)	Color	Segement Width	CC/CA	λ_d (nm)	Resin Color	Face Color	I_v (Min/Typ) (mcd)
T316SURWA/S530-A3	9.2 (0.3)	● Red	4.8	CA	624	White	Gray	5.6 / 11.0
T316SYGWA/S530-E2	9.2 (0.3)	● Green	4.8	CA	573	White	Gray	1.4 / 3.2

UNIT : mm

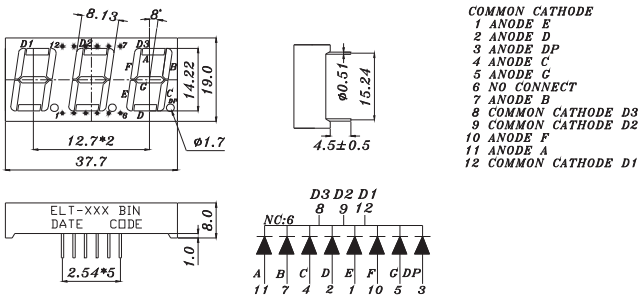

Product	Segement Height mm (inch)	Color	Segement Width	CC/CA	λ_d (nm)	Resin Color	Face Color	I_v (Min/Typ) (mcd)
T511SURWA/S530-A3	14.22 (0.5)	● Red	8.13	CC	624	White	Gray	7.8 / 17.6
T511SYGWA/S530-E2	14.22 (0.5)	● Green	8.13	CC	573	White	Gray	2.8 / 4.5
T511UYOWA/S530-A3	14.22 (0.5)	● Brilliant Orange	8.13	CC	589	White	Gray	5.6 / 12.5

LED Digital Displays ❙ Chip On Board Display ❙ Three Digit Display

UNIT : mm

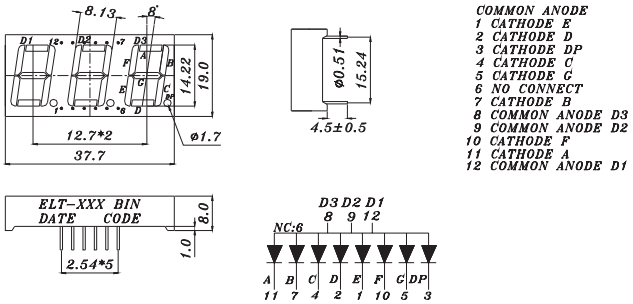

Product	Segement Height mm (inch)	Color	Segement Width	CC/CA	λ_d (nm)	Resin Color	Face Color	I_v (Min/Typ) (mcd)
T512SURWA/S530-A3	14.22 (0.5)	● Red	8.13	CA	624	White	Gray	7.8 / 17.6
T512SYGWA/S530-E2	14.22 (0.5)	● Green	8.13	CA	573	White	Gray	2.8 / 4.5
T512UYOWA/S530-A3	14.22 (0.5)	● Brilliant Orange	8.13	CA	589	White	Gray	5.6 / 12.5

LED Digital Display ❙ Chip On Board Display ❙ Four Digit Display

UNIT : mm

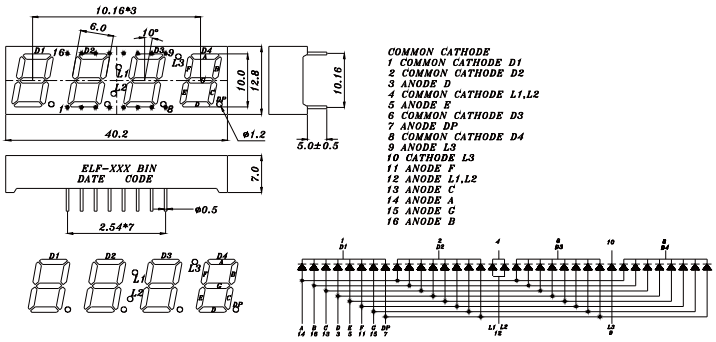

Product	Segement Height mm (inch)	Color	Segement Width	CC/CA	λ_d (nm)	Resin Color	Face Color	I_v (Min/Typ) (mcd)
F415SURWA/S530-A3	10 (0.4)	● Red	6	CC	624	White	Gray	5.6 / 8.9

LED Digital Displays ❙ Chip On Board Display ❙ Four Digit Display

UNIT : mm

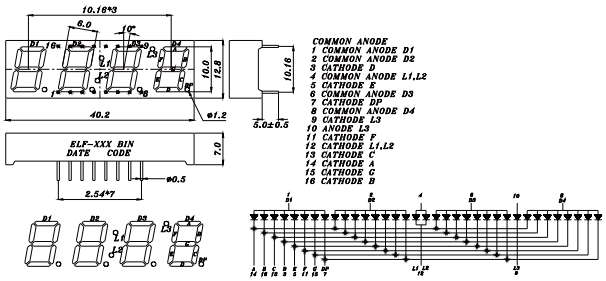

Product	Segement Height mm (inch)	Color	Segement Width	CC/CA	λ_d (nm)	Resin Color	Face Color	I_v (Min/Typ) (mcd)
F416SYGWA/S530-E3	10 (0.4)	● Green	6	CA	573	White	Gray	4.0 / 8.9
F416SURWA/S530-A3/S685	10 (0.4)	● Red	6	CA	635	White	Gray	5.6 / 8.9

UNIT : mm

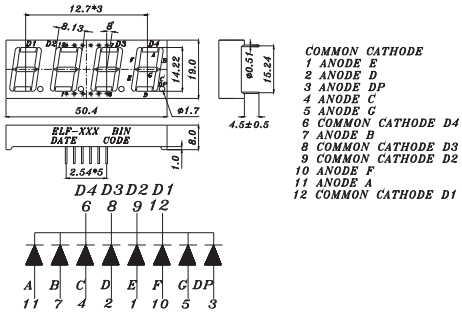

Product	Segement Height mm (inch)	Color	Segement Width	CC/CA	λ_d (nm)	Resin Color	Face Color	I_v (Min/Typ) (mcd)
F511SURWA/S530-A3	14.22 (0.5)	● Red	8.13	CC	624	White	Gray	7.8 / 15.0
F511SYGWA/S530-E2	14.22 (0.5)	● Green	8.13	CC	573	White	Gray	4.0 / 4.5

UNIT : mm

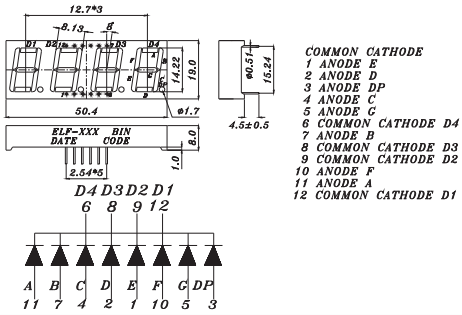

Product	Segement Height mm (inch)	Color	Segement Width	CC/CA	λ_d (nm)	Resin Color	Face Color	I_v (Min/Typ) (mcd)
F512SURWA/S530-A3	14.22 (0.5)	● Red	8.13	CA	624	White	Gray	7.8 / 15.0
F512SYGWA/S530-E2	14.22 (0.5)	● Green	8.13	CA	573	White	Gray	2.8 4.5

LED Digital Displays ❙ SMD Display ❙ Single Digit Display

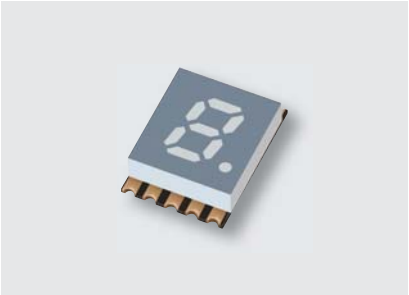

UNIT : mm

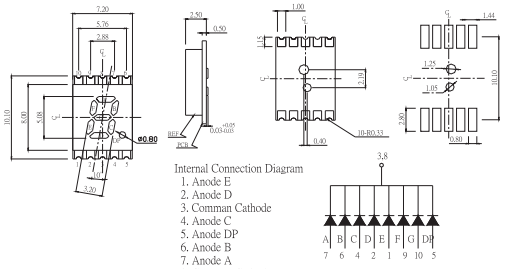

Internal Connection Diagram
1. Anode E
2. Anode D
3. Comman Cathode
4. Anode C
5. Anode DP
6. Anode B
7. Anode A
8. Comman Cathode
9. Anode F
10. Anode G

Product	Segement Height mm (inch)	Color	Segement Width	CC/CA	λ_d (nm)	Resin Color	Face Color	I_v (Min/Typ) (mcd)
SS205SURWA/S530-A3/S290	5.08 (0.2)	● Red	3.2	CC	624	White	Gray	5.6 / 13.7
SS205UYOWA/S530-A3/S290	5.08 (0.2)	● Orange	3.2	CC	605	White	Gray	7.8 / 13.3
SS205UYWA/S530-A3/S290	5.08 (0.2)	● Yellow	3.2	CC	588	White	Gray	7.8 / 16.3
SS205SYGWA/S530-E2/S290	5.08 (0.2)	● Green	3.2	CC	573	White	Gray	4.0 / 11.5

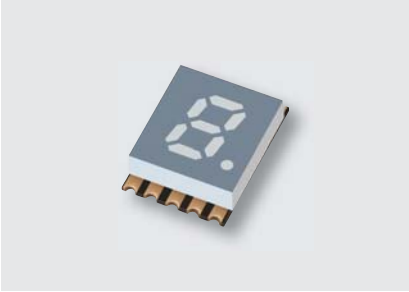

UNIT : mm

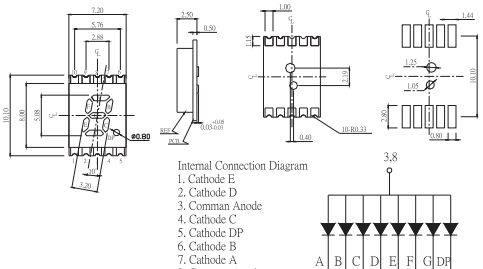

Internal Connection Diagram
1. Cathode E
2. Cathode D
3. Comman Anode
4. Cathode C
5. Cathode DP
6. Cathode B
7. Cathode A
8. Comman Anode
9. Cathode F
10. Cathode G

Product	Segement Height mm (inch)	Color	Segement Width	CC/CA	λ_d (nm)	Resin Color	Face Color	I_v (Min/Typ) (mcd)
SS206SURWA/S530-A3/S290	5.08 (0.2)	● Red	3.2	CA	624	White	Gray	5.6 / 13.7
SS206UYWA/S530-A3/S290	5.08 (0.2)	● Yellow	3.2	CA	588	White	Gray	7.8 / 16.3

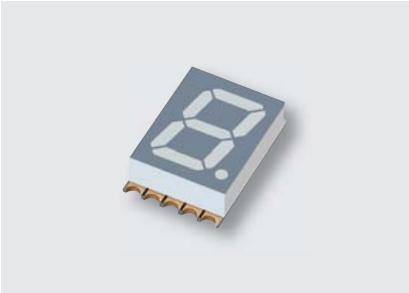

UNIT : mm

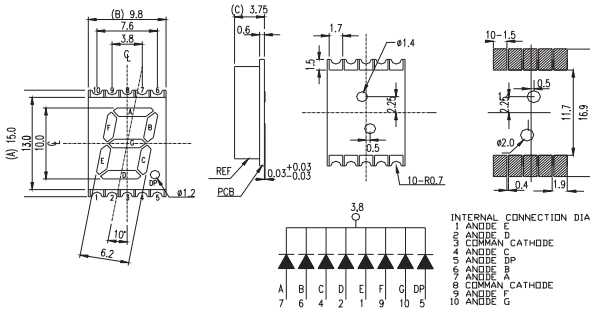

Product	Segement Height mm (inch)	Color	Segement Width	CC/CA	λ_d (nm)	Resin Color	Face Color	I_v (Min/Typ) (mcd)
SS405SURWB/S530-A3/S290	10 (0.4)	● Red	6.2	CC	624	White	Black	7.8 / 16.5

LED Digital Displays ❙ SMD Display ❙ Single Digit Display

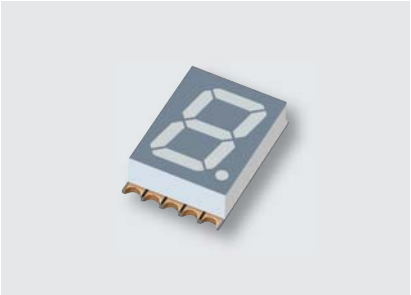

UNIT : mm

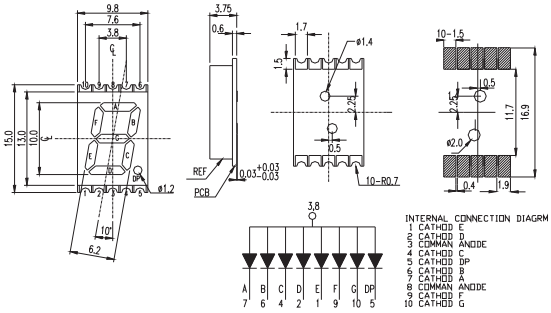

Product	Segement Height mm (inch)	Color	Segement Width	CC/CA	λ_d (nm)	Resin Color	Face Color	I_v (Min/Typ) (mcd)
SS406SURWA/S530-A3/S290	10 (0.4)	● Red	6.2	CA	624	White	Gray	7.8 / 6.5

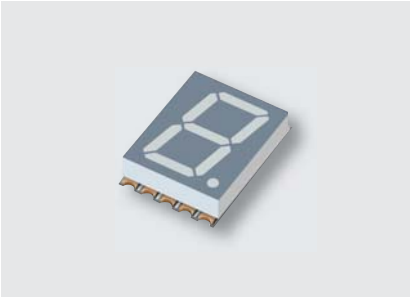

UNIT : mm

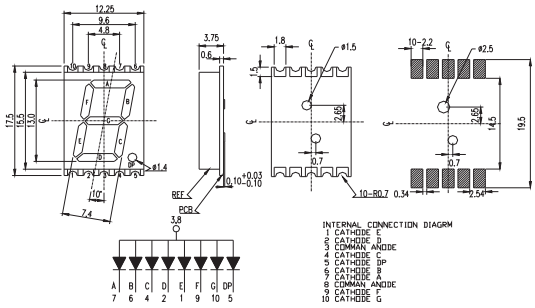

Product	Segement Height mm (inch)	Color	Segement Width	CC/CA	λ_d (nm)	Resin Color	Face Color	I_v (Min/Typ) (mcd)
S506SYGWA/S530-E2	13.0 (0.5)	● Green	7.4	CA	573	White	Gray	5.6 / 9.1

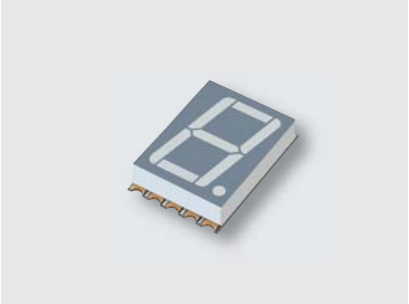

UNIT : mm

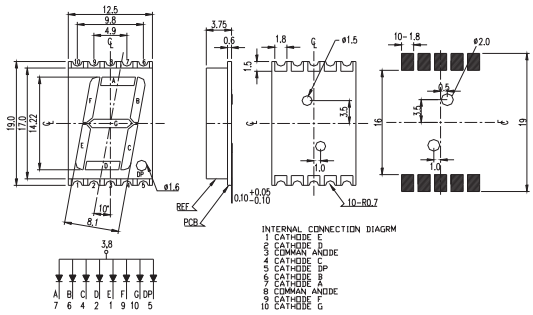

Product	Segement Height mm (inch)	Color	Segement Width	CC/CA	λ_d (nm)	Resin Color	Face Color	I_v (Min/Typ) (mcd)
SS511SURWA/S530-A3/S290	14.22 (0.5)	● Red	8.1	CC	624	White	Gray	15 / 23
SS511SYGWA/S530-E2/S290	14.22 (0.5)	● Green	8.1	CC	573	White	Gray	4.0 / 10.8

LED Digital Displays ❙ SMD Display ❙ Single Digit Display

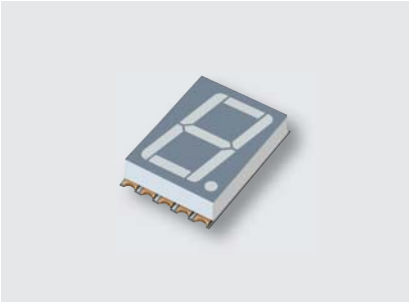

UNIT : mm

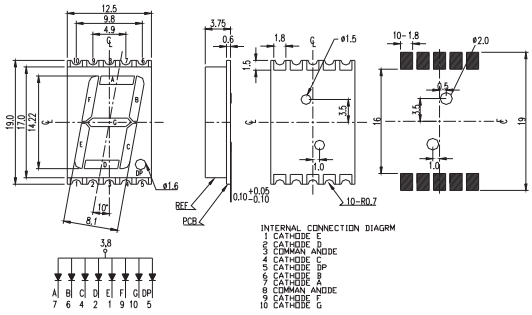

Product	Segement Height mm (inch)	Color	Segement Width	CC/CA	λ_d (nm)	Resin Color	Face Color	I_v (Min/Typ) (mcd)
SS512SURWA/S530-A3/S290	14.22 (0.5)	● Red	8.1	CA	624	White	Gray	15 / 23
SS512UBWA/C470/S290	14.22 (0.5)	● Blue	8.1	CA	468	White	Gray	3.0 / 3.7

LED Digital Display ❙ SMD Display ❙ Dual Digit Display

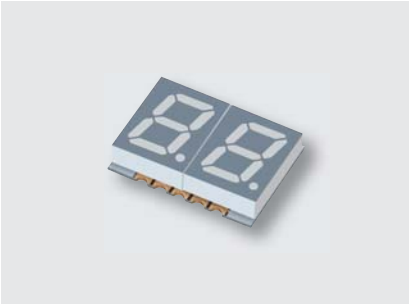

UNIT : mm

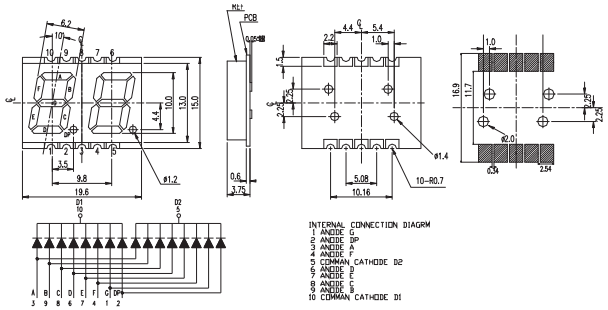

Product	Segement Height mm (inch)	Color	Segement Width	CC/CA	λ_d (nm)	Resin Color	Face Color	I_v (Min/Typ) (mcd)
SD405SURWA/S530-A3/S290	10 (0.4)	● Red	6.2	CC	624	White	Gray	7.8 / 17.10

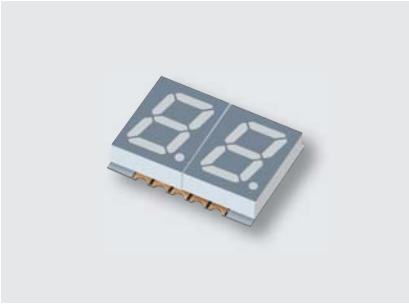

UNIT : mm

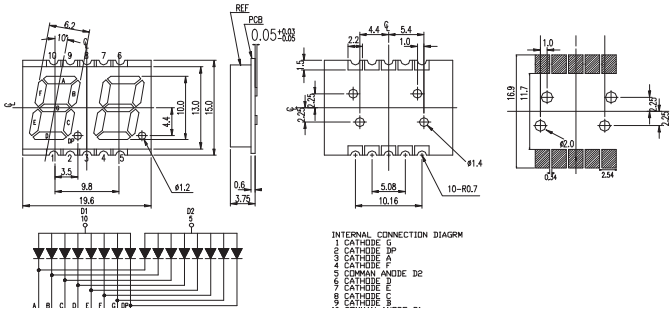

Product	Segement Height mm (inch)	Color	Segement Width	CC/CA	λ_d (nm)	Resin Color	Face Color	I_v (Min/Typ) (mcd)
SD406SURWA/S530-A4/S290	10 (0.4)	● Red	6.2	CA	624	White	Gray	7.8 16.2
SD406SYGWA/S530-E2/S290	10 (0.4)	● Green	6.2	CA	573	White	Gray	5.60 / 10.2

LED Digital Displays ❙ SMD Display ❙ Dual Digit Display

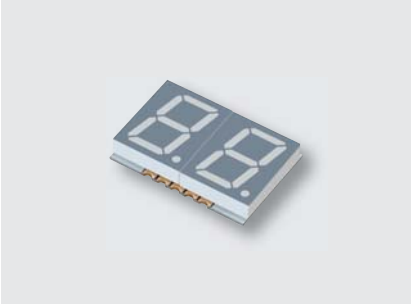

UNIT : mm

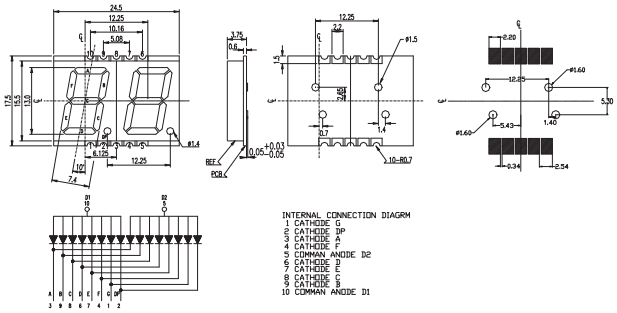

Product	Segement Height mm (inch)	Color	Segement Width	CC/CA	λ_d (nm)	Resin Color	Face Color	I_v (Min/Typ) (mcd)
SD506SURWA/S530-A4/S290	13 (0.5)	● Red	7.4	CA	624	White	Gray	7.8 / 15.0

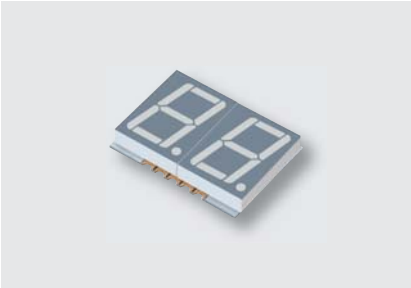

UNIT : mm

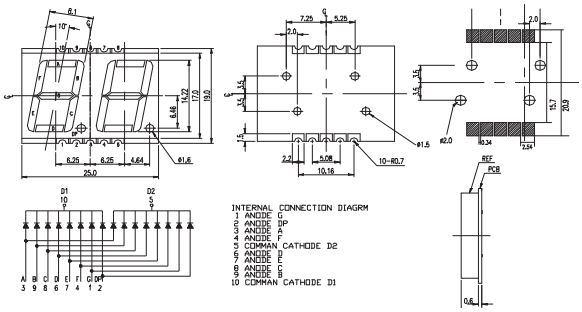

Product	Segement Height mm (inch)	Color	Segement Width	CC/CA	λ_d (nm)	Resin Color	Face Color	I_v (Min/Typ) (mcd)
SD511SYGWA/S530-E2/S290	14.22 (0.5)	● Green	8.1	CC	573	White	Gray	5.6 / 11.12

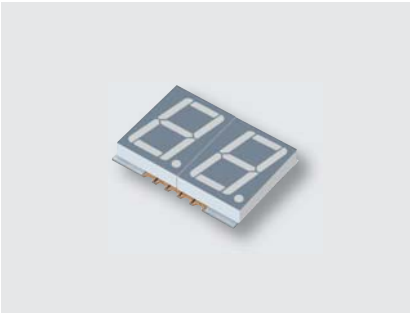

UNIT : mm

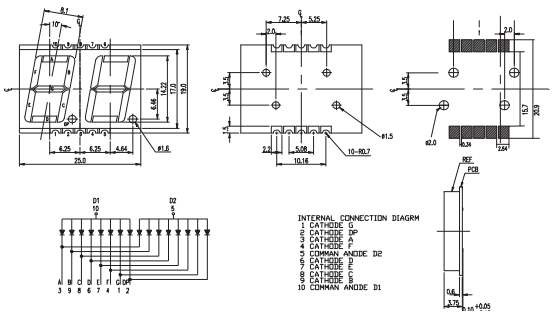

Product	Segement Height mm (inch)	Color	Segement Width	CC/CA	λ_d (nm)	Resin Color	Face Color	I_v (Min/Typ) (mcd)
SD512SYGWA/S530-E2/S290	14.22 (0.5)	● Green	8.1	CA	573	White	Gray	4.0 / 13.35

LED Digital Displays ❙ SMD Display ❙ Three Digit Display

UNIT : mm

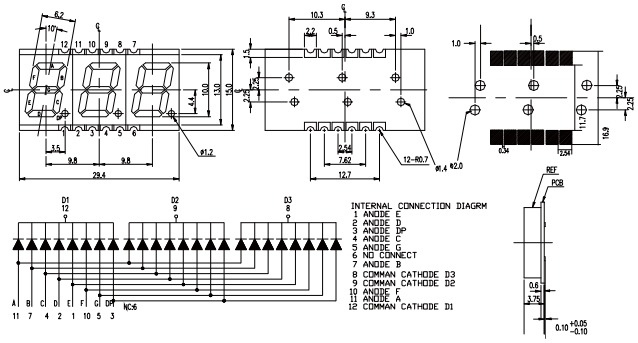

Product	Segement Height mm (inch)	Color	Segement Width	CC/CA	λ_d (nm)	Resin Color	Face Color	I_V (Min/Typ) (mcd)
ST405SURWA/S530-A3/S290	10 (0.4)	● Red	6.2	CC	624	White	Gray	7.8 / 16.40

UNIT : mm

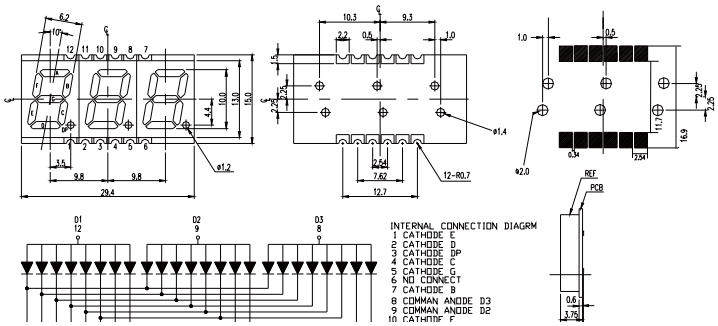

Product	Segement Height mm (inch)	Color	Segement Width	CC/CA	λ_d (nm)	Resin Color	Face Color	I_V (Min/Typ) (mcd)
ST406SURWA/S530-A3/S290	10 (0.4)	● Red	6.2	CA	624	White	Gray	7.8 / 16.40

UNIT : mm

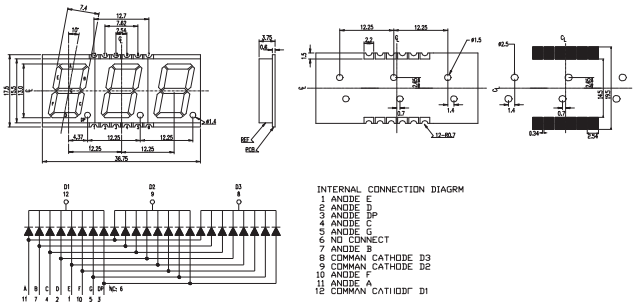

Product	Segement Height mm (inch)	Color	Segement Width	CC/CA	λ_d (nm)	Resin Color	Face Color	I_V (Min/Typ) (mcd)
ST505SYGWA/S530-E2/S290	13 (0.5)	● Green	7.4	CC	573	White	Gray	4.0 / 9.6

LED Digital Displays ❙ SMD Display ❙ Three Digit Display

UNIT : mm

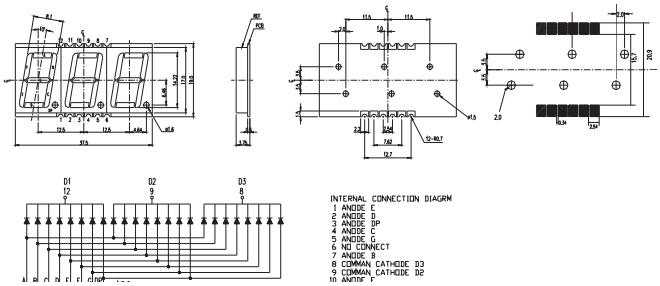

Product	Segement Height mm (inch)	Color	Segement Width	CC/CA	λ_d (nm)	Resin Color	Face Color	I_v (Min/Typ) (mcd)
ST511SYGWA/S530-E2/S290	14.22 (0.5)	● Green	7.4	CC	573	White	Gray	4.0 / 9.6

UNIT : mm

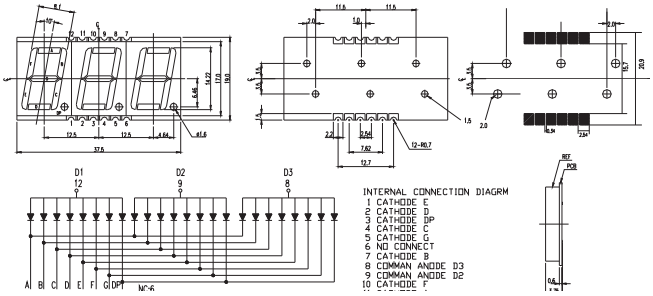

Product	Segement Height mm (inch)	Color	Segement Width	CC/CA	λ_d (nm)	Resin Color	Face Color	I_v (Min/Typ) (mcd)
ST512SURWA/S530-A3/S290	14.22 (0.5)	● Red	7.4	CA	624	White	Gray	11.0 / 21.6
ST512SYGWA/S530-E2/S290	14.22 (0.5)	● Green	7.4	CA	573	White	Gray	7.8 / 16.4

LED Digital Displays ❙ SMD Display ❙ Four Digit Display

UNIT : mm

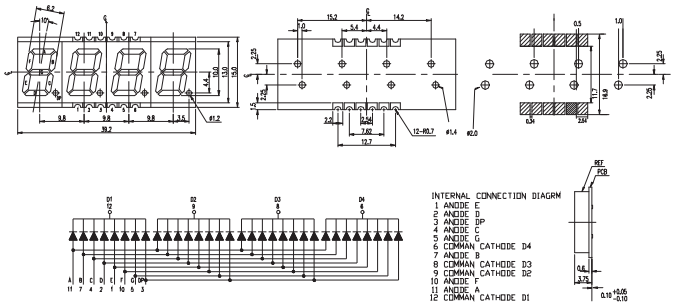

Product	Segement Height mm (inch)	Color	Segement Width	CC/CA	λ_d (nm)	Resin Color	Face Color	I_v (Min/Typ) (mcd)
SF405SURWA/S530-A3/S290	10 (0.4)	Red	6.2	CC	624	White	Gray	7.8 / 16.40
SF405SYGWA/S530-E2/S290	10 (0.4)	Green	6.2	CC	573	White	Gray	5.6 / 12.52

UNIT : mm

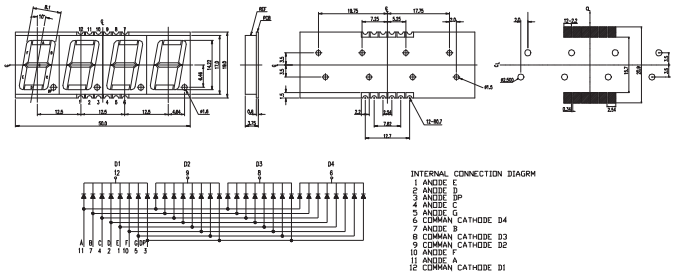

Product	Segement Height mm (inch)	Color	Segement Width	CC/CA	λ_d (nm)	Resin Color	Face Color	I_v (Min/Typ) (mcd)
SF511SURWA/S530-A3/S290	14.22 (0.5)	Red	8.1	CC	624	White	Gray	11.0 / 23.4

UNIT : mm

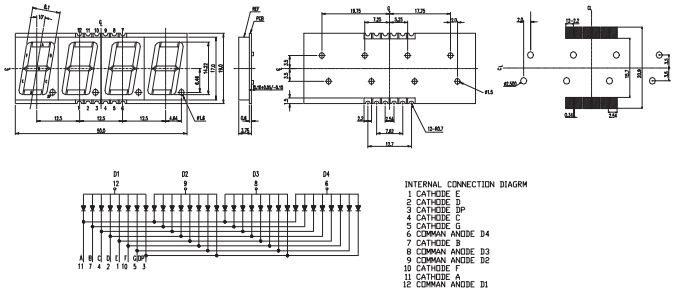

Product	Segement Height mm (inch)	Color	Segement Width	CC/CA	λ_d (nm)	Resin Color	Face Color	I_v (Min/Typ) (mcd)
SF512SURWA/S530-A3/S290	14.22 (0.5)	Red	8.1	CA	624	White	Gray	11.0 / 27.8
SF512SYGWA/S530-E2/S290	14.22 (0.5)	Green	8.1	CA	573	White	Gray	4.0 / 10.8

LED Digital Displays ❙ Dot Matrix Display

UNIT : mm

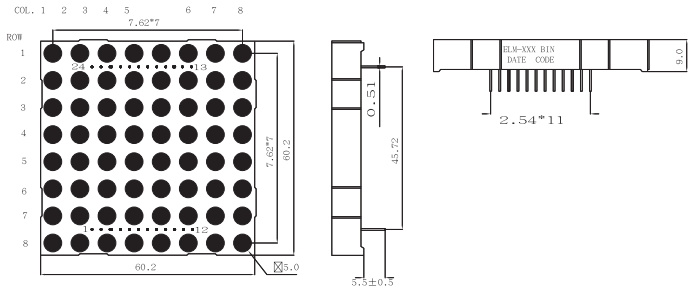

Product	Size (LXWmm)	Color	Segement Width	CC/CA	λ_d (nm)	Resin Color	Face Color	I_v (Min/Typ) (mcd)
M2881SURWA/S530-A3	60.2x60.2	● Red	--	CC	624	White	Gray	7.8 / 21.0
M2881SYGWA/S530-E2	60.2x60.2	● Green	--	CC	573	White	Gray	7.8 / 17.6
M2881UYWA/S530-A3	60.2x60.2	● Yellow	--	CC	589	White	Gray	11 / 17.6

UNIT : mm

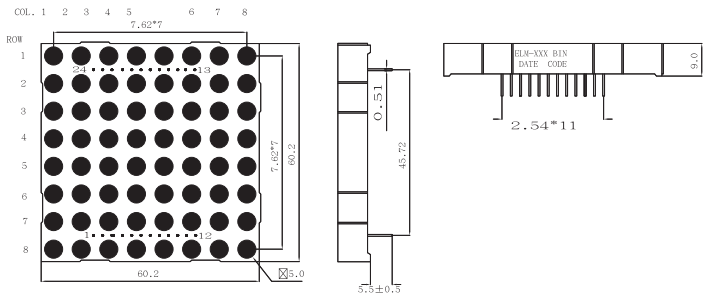

Product	Size (LXWmm)	Color	Segement Width	CC/CA	λ_d (nm)	Resin Color	Face Color	I_v (Min/Typ) (mcd)
M2882SYGWA/S530-E2	60.2x60.2	● Green	--	CA	573	White	Gray	7.8 / 17.6

LED Digital Displays ❙ Light Bar Display

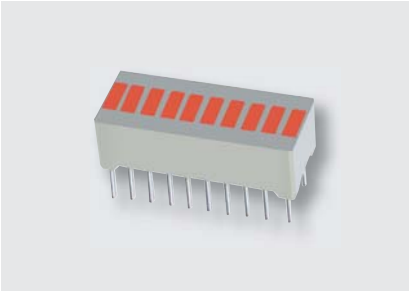

UNIT : mm

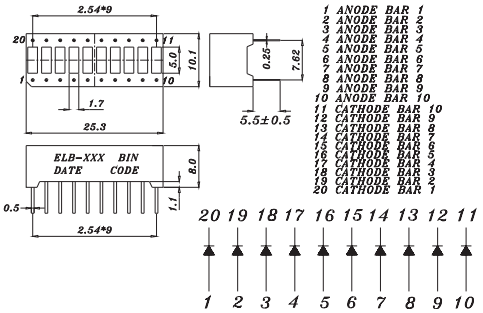

Product	Size (LXWmm)	Color	Segement Width	CC/CA	λ_d (nm)	Resin Color	Face Color	I_v (Min/Typ) (mcd)
B1001SDRWB/S530-A3	25.3x10.1	Deep Red	--	CC	639	White	Black	4.0 / 8.9
B1001SURWB/S530-A3	25.3x10.1	Red	--	CC	624	White	Black	5.6 / 12.5
B1001USOWA/S530-A4	25.3x10.1	Orange	--	CC	615	White	Gray	7.8 / 7.6
B1001SYGWA/S530-E2	25.3x10.1	Green	--	CC	573	White	Gray	2.8 / 4.5

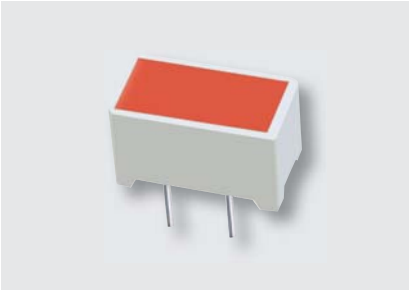

UNIT : mm

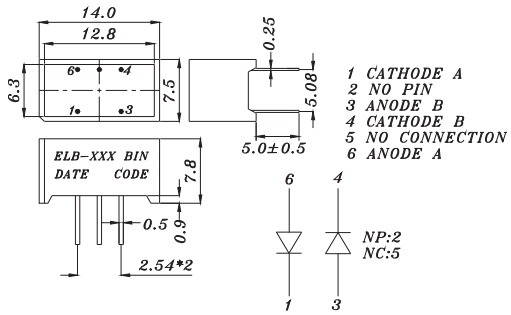

Product	Size (LXWmm)	Color	Segement Width	CC/CA	λ_d (nm)	Resin Color	Face Color	I_v (Min/Typ) (mcd)
B1010SURD/S530-A3	14.0x7.5	Red	--	CA	624	Red	Red	11 / 24
B1010SYGD/S530-E2	14.0x7.5	Green	--	CA	573	Red	Red	2.8 / 4.5

INFRARED LED, SENSORS, COUPLERS

138 INFRARED LED AND SILICON DETECTOR
162 INFRARED RECEIVER MODULE
174 OPTIC-FIBER DEVICE (PHOTO LINK)
186 OPTICAL SENSOR
201 PHOTO COUPLER

Infrared LED and Silicon Detector ❙ Emitter ❙ Lamp 3mm

UNIT : mm

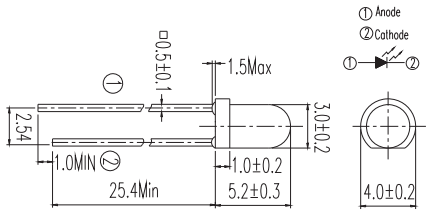

Product	Size (mm)	λ_P (nm)	V_F Typ (V)	V_F Max (V)	Ie_Min (mW/sr)	Ie_Typ (mW/sr)	Viewing Angle (°)
HIR204	3	850	1.45	1.65	7.8	17.6	25
HIR204/H0	3	850	1.45	1.65	4	8.9	40
HIR204C	3	850	1.45	1.65	7.8	17.6	25
HIR204C/H0	3	850	1.45	1.65	4	8.9	40
HIR234C	3	850	1.46	1.65	7.8	15	30
IR204-A	3	940	1.2	1.5	4	5.6	35
IR204/H16/L10	3	940	1.2	1.5	2.8	4	50
IR204/H60	3	940	1.2	1.5	4	7	50
IR204C-A	3	940	1.2	1.5	4	5.6	35
IR204C/H16/L10	3	940	1.2	1.5	2.8	4	50
SIR204-A	3	875	1.3	1.6	4	6.4	30
SIR204C	3	875	1.3	1.6	4	6.4	30

UNIT : mm

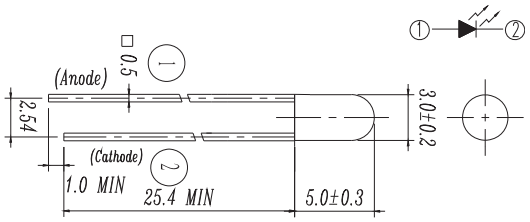

Product	Size (mm)	λ_P (nm)	V_F Typ (V)	V_F Max (V)	Ie_Min (mW/sr)	Ie_Typ (mW/sr)	Viewing Angle (°)
SIR234	3	875	1.3	1.6	5.6	9.3	30

Infrared LED and Silicon Detector ❙ Emitter ❙ Lamp 5mm

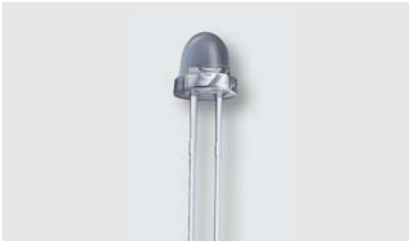

UNIT : mm

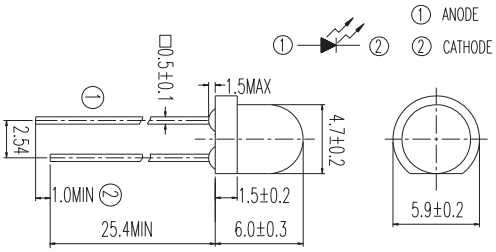

Product	Size (mm)	λ_P (nm)	V_F Typ (V)	V_F Max (V)	Ie_Min (mW/sr)	Ie_Typ (mW/sr)	Viewing Angle (°)
HIR323C	5	850	1.45	1.65	15	30	25
HIR323C/H0	5	850	1.45	1.65	7.8	11	30
IR323	5	940	1.2	1.5	4	6.4	30
IR323/H0-A	5	940	1.2	1.5	2	3.5	60
SIR323-5	5	875	1.3	1.6	4	7.8	35

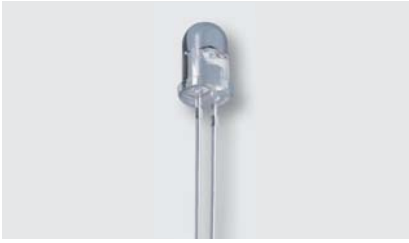

UNIT : mm

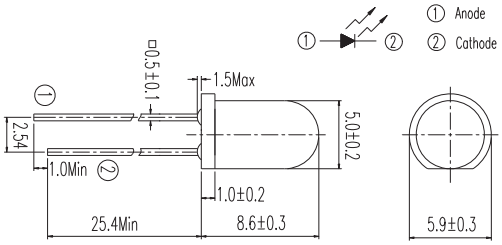

Product	Size (mm)	λ_P (nm)	V_F Typ (V)	V_F Max (V)	Ie_Min (mW/sr)	Ie_Typ (mW/sr)	Viewing Angle (°)
HIR333/H0	5	850	1.45	1.65	7.8	15	30
HIR333C/H0	5	850	1.45	1.65	7.8	15	30
IR333-A	5	940	1.2	1.5	7.8	20	20
IR333/H0	5	940	1.2	1.5	5.6	7.8	40
IR333/H0/L10	5	940	1.2	1.5	11	12	40
IR333C	5	940	1.2	1.5	7.8	15	20
IR333C/H0/L10	5	940	1.2	1.5	5.6	7.8	40
IR333C/H2	5	940	1.2	1.5	7.8	15	30
SIR333-A	5	875	1.3	1.6	7.8	20	20

UNIT : mm

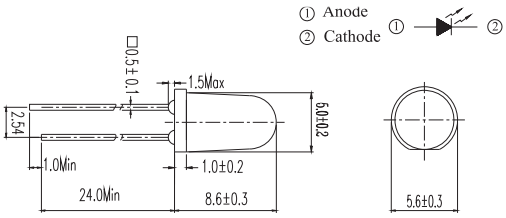

Product	Size (mm)	λ_P (nm)	V_F Typ (V)	V_F Max (V)	Ie_Min (mW/sr)	Ie_Typ (mW/sr)	Viewing Angle (°)
IR383	5	940	1.2	1.5	7.8	20	20
SIR383C	5	875	1.3	1.6	11	20	20

Infrared LED and Silicon Detector ❙ Emitter ❙ Lamp 5mm

UNIT : mm

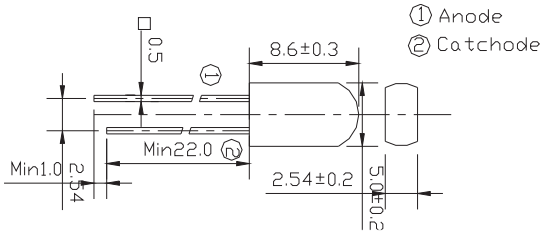

Product	Size (mm)	λ_P (nm)	V_F Typ (V)	V_F Max (V)	Ie_Min (mW/sr)	Ie_Typ (mW/sr)	Viewing Angle (°)
IR533C	5	940	1.2	1.5	4	7.8	25

UNIT : mm

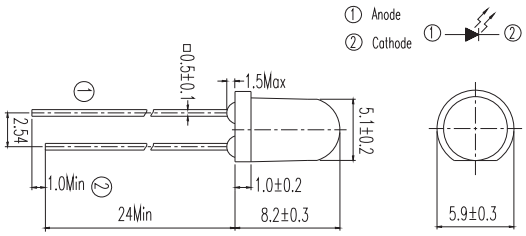

Product	Size (mm)	λ_P (nm)	V_F Typ (V)	V_F Max (V)	Ie_Min (mW/sr)	Ie_Typ (mW/sr)	Viewing Angle (°)
HIR7373C	5	850	1.45	1.65	7.8	15	40
IR7373C	5	940	1.2	1.5	5.6	8	50

UNIT : mm

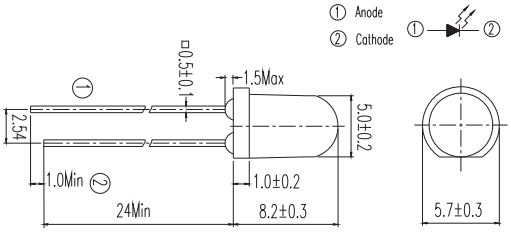

Product	Size (mm)	λ_P (nm)	V_F Typ (V)	V_F Max (V)	Ie_Min (mW/sr)	Ie_Typ (mW/sr)	Viewing Angle (°)
HIR7393C	5	850	1.45	1.65	7.8	15	50
IR7393C	5	940	1.2	1.5	4	6.5	60

Infrared LED and Silicon Detector ❙ Emitter ❙ Lamp 5mm

UNIT : mm

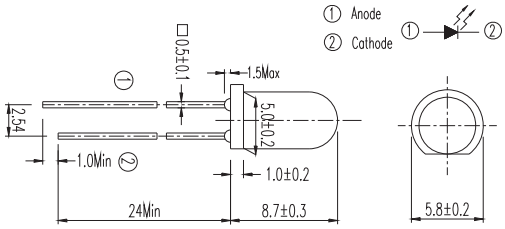

Product	Size (mm)	λ_P (nm)	V_F Typ (V)	V_F Max (V)	Ie_Min (mW/sr)	Ie_Typ (mW/sr)	Viewing Angle (°)
HIR8323/C16	5	850	1.45	1.65	20	30	30

UNIT : mm

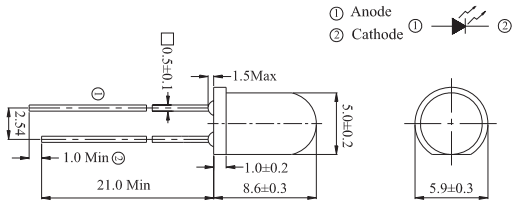

Product	Size (mm)	λ_P (nm)	V_F Typ (V)	V_F Max (V)	Ie_Min (mW/sr)	Ie_Typ (mW/sr)	Viewing Angle (°)
IR8353-14C	5	940	1.2	1.3	7.8	11	35

Infrared LED and Silicon Detector ❙ Emitter ❙ Piranha

UNIT : mm

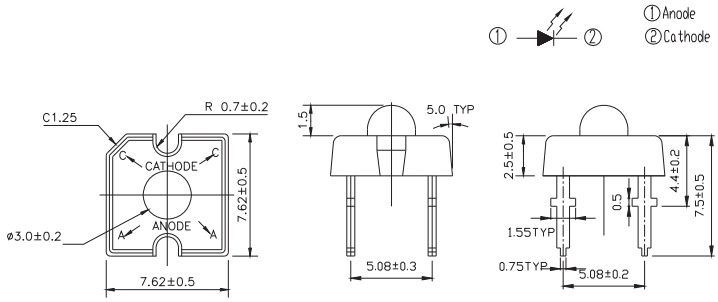

Product	Size (LXWXHmm)	λ_P (nm)	V_F Typ (V)	V_F Max (V)	Ie_Min (mW/sr)	Ie_Typ (mW/sr)	Viewing Angle (°)
HIR30-01C/S16	7.62x7.62x4.0	850	1.45	1.65	5.6	1	35

UNIT : mm

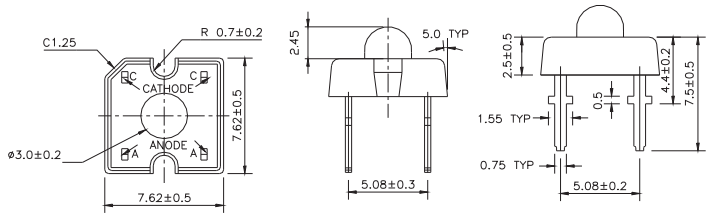

Product	Size (LXWXHmm)	λ_P (nm)	V_F Typ (V)	V_F Max (V)	Ie_Min (mW/sr)	Ie_Typ (mW/sr)	Viewing Angle (°)
HIR36-01C/S32	7.62x7.62x5.0	850	1.45	1.65	15	29	20

UNIT : mm

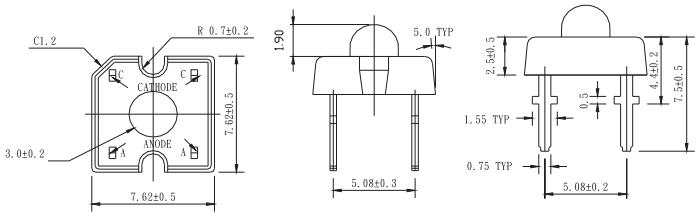

Product	Size (LXWXHmm)	λ_P (nm)	V_F Typ (V)	V_F Max (V)	Ie_Min (mW/sr)	Ie_Typ (mW/sr)	Viewing Angle (°)
HIR38-01C	7.62x7.62x4.4	850	1.45	1.65	7.8	17	30

Infrared LED and Silicon Detector ❙ Emitter ❙ Side Look

UNIT : mm

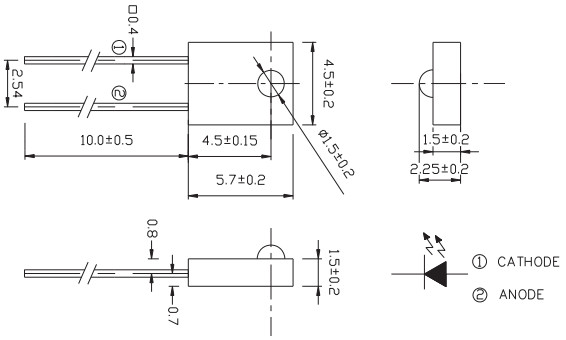

Product	Size (LXWXHmm)	λ_P (nm)	V_F Typ (V)	V_F Max (V)	Ie_Min (mW/sr)	Ie_Typ (mW/sr)	Viewing Angle (°)
IR908-7C-F	4.5x2.25x5.7	940	1.2	1.5	--	--	60

UNIT : mm

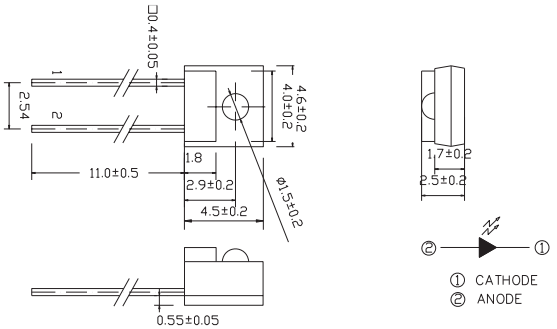

Product	Size (LXWXHmm)	λ_P (nm)	V_F Typ (V)	V_F Max (V)	Ie_Min (mW/sr)	Ie_Typ (mW/sr)	Viewing Angle (°)
HIR928-6C-F	4.6x2.5x4.5	850	1.45	1.65	--	--	25
SIR928-6C-F	4.6x2.5x4.5	875	1.3	1.6	--	--	40
IR928-6C-F	4.6x2.5x4.5	940	1.2	1.5	--	--	40

UNIT : mm

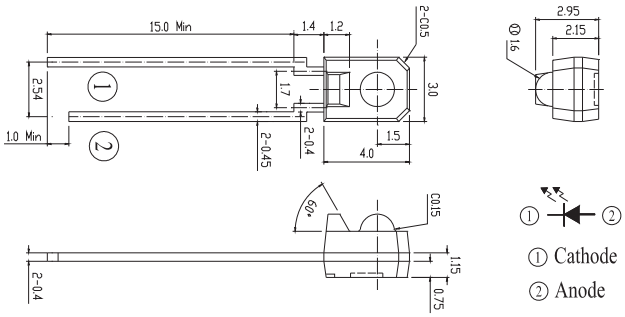

Product	Size (LXWXHmm)	λ_P (nm)	V_F Typ (V)	V_F Max (V)	Ie_Min (mW/sr)	Ie_Typ (mW/sr)	Viewing Angle (°)
IR958-8C	3.0x2.95x4.0	940	1.2	1.5	--	--	25
IR958-8P	3.0x2.95x4.0	950	1.2	1.5	--	--	22

Infrared LED and Silicon Detector ❙ Emitter ❙ SMD

UNIT : mm

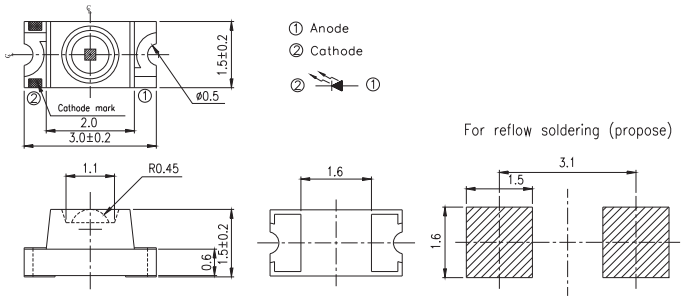

Product	Size (LXWXHmm)	λ_P (nm)	V_F Typ (V)	V_F Max (V)	Ie_Min (mW/sr)	Ie_Typ (mW/sr)	Viewing Angle (°)
HIR11-21C/L11/TR8	3.0x1.5x1.5	850	1.45	1.65	1	2	75
IR11-21C/TR8	3.0x1.5x1.5	940	1.2	1.5	0.5	1.6	100

UNIT : mm

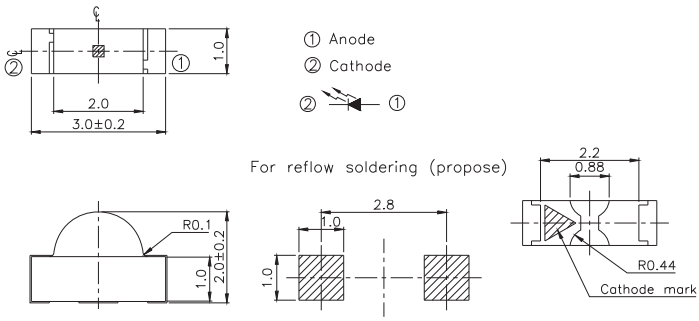

Product	Size (LXWXHmm)	λ_P (nm)	V_F Typ (V)	V_F Max (V)	Ie_Min (mW/sr)	Ie_Typ (mW/sr)	Viewing Angle (°)
IR12-21C/TR8	3.0x1.0x2.0	940	1.2	1.5	0.5	0.8	160
SIR12-21C/TR8	3.0x1.0x2.0	875	1.3	1.6	0.5	0.9	160

UNIT : mm

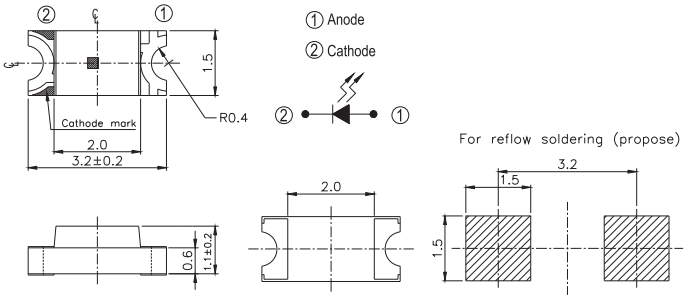

Product	Size (LXWXHmm)	λ_P (nm)	V_F Typ (V)	V_F Max (V)	Ie_Min (mW/sr)	Ie_Typ (mW/sr)	Viewing Angle (°)
IR15-21C/TR8	3.2x1.5x1.1	940	1.2	1.5	0.2	0.8	160

Infrared LED and Silicon Detector ❙ Emitter ❙ SMD

UNIT : mm

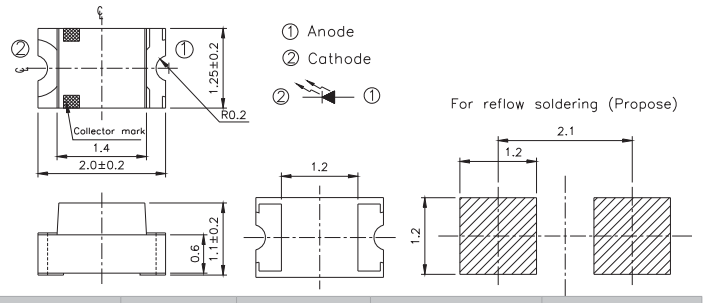

Product	Size (LXWXHmm)	λ_P (nm)	V_F Typ (V)	V_F Max (V)	Ie_Min (mW/sr)	Ie_Typ (mW/sr)	Viewing Angle (°)
IR17-21C/TR8	2.0x1.25x1.1	940	1.2	1.5	0.2	0.8	120

UNIT : mm

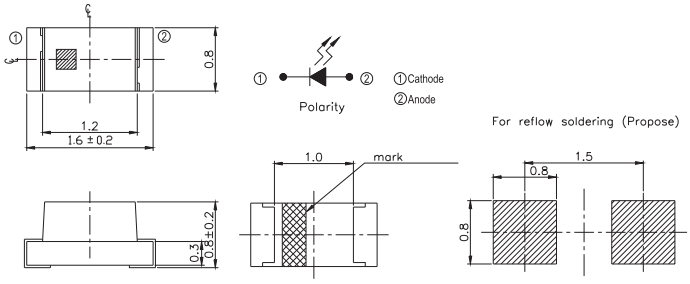

Product	Size (LXWXHmm)	λ_P (nm)	V_F Typ (V)	V_F Max (V)	Ie_Min (mW/sr)	Ie_Typ (mW/sr)	Viewing Angle (°)
HIR19-21C/L11/TR8	1.6x0.8x0.8	850	1.45	1.65	0.2	0.8	145
IR19-21C/TR8	1.6x0.8x0.8	940	1.2	1.5	0.2	0.7	150
SIR19-21C/TR8	1.6x0.8x0.8	875	1.3	1.6	0.2	0.5	145

UNIT : mm

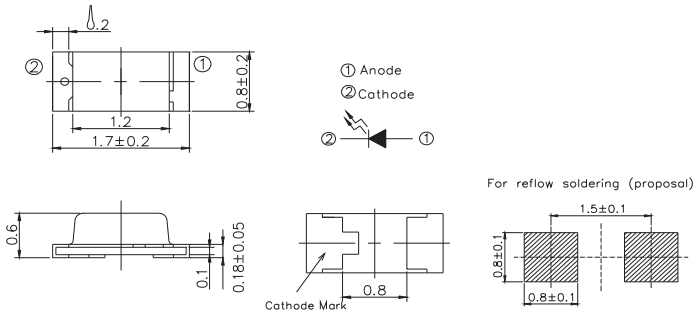

Product	Size (LXWXHmm)	λ_P (nm)	V_F Typ (V)	V_F Max (V)	Ie_Min (mW/sr)	Ie_Typ (mW/sr)	Viewing Angle (°)
IR19-315C/TR8	1.7x0.8x0.6	940	1.2	1.5	0.2	0.6	140
SIR19-315/TR8	1.7x0.8x0.6	870	1.35	1.7	1	1.3	140

Infrared LED and Silicon Detector ❙ Emitter ❙ SMD

UNIT : mm

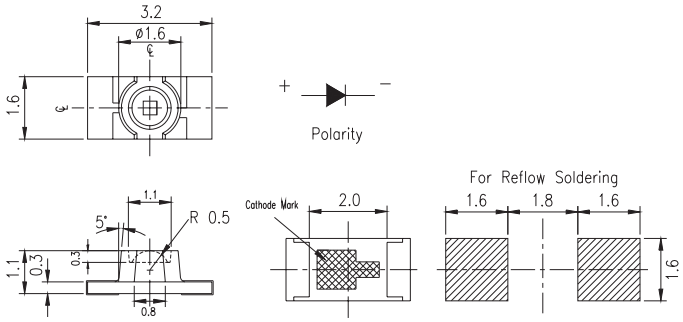

Product	Size (LXWXHmm)	λ_P (nm)	V_F Typ (V)	V_F Max (V)	Ie_Min (mW/sr)	Ie_Typ (mW/sr)	Viewing Angle (°)
IR25-21C/TR8	3.2x1.6x1.1	940	1.2	1.5	0.5	1.5	160

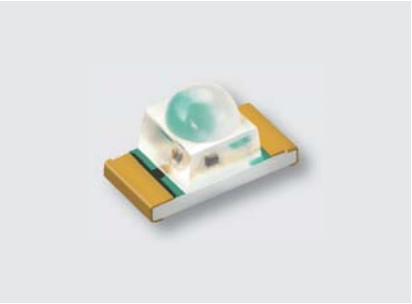

UNIT : mm

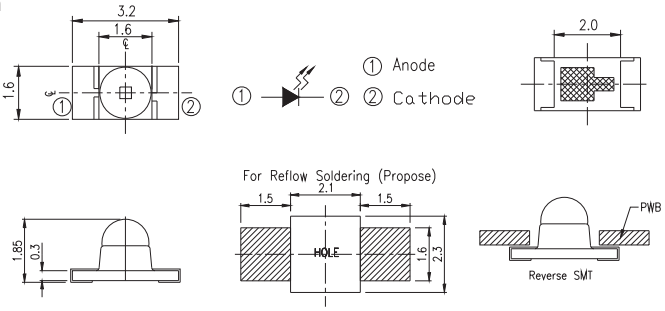

Product	Size (LXWXHmm)	λ_P (nm)	V_F Typ (V)	V_F Max (V)	Ie_Min (mW/sr)	Ie_Typ (mW/sr)	Viewing Angle (°)
IR26-21C/L110/TR8	3.2x1.6x1.85	940	1.2	1.5	1	3.5	10

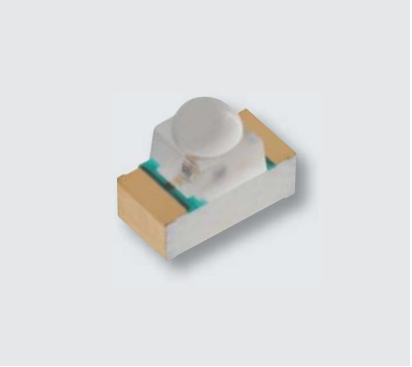

UNIT : mm

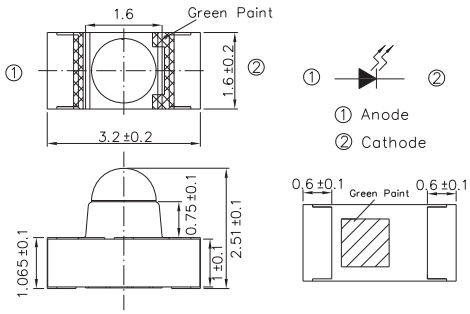

Product	Size (LXWXHmm)	λ_P (nm)	V_F Typ (V)	V_F Max (V)	Ie_Min (mW/sr)	Ie_Typ (mW/sr)	Viewing Angle (°)
IR26-51C/L110/TR8	3.2x1.6x2.5	940	1.2	1.5	1	3.5	20

Infrared LED and Silicon Detector ❙ Emitter ❙ SMD

UNIT : mm

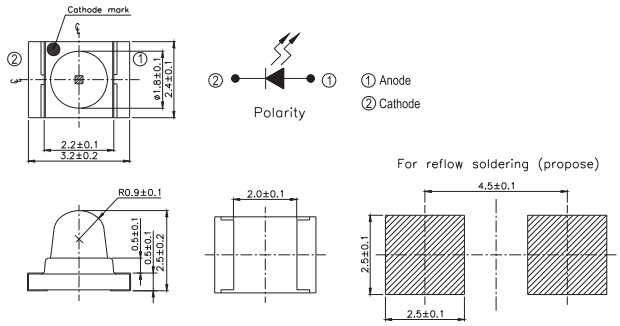

Product	Size (LXWXHmm)	λ_P (nm)	V_F Typ (V)	V_F Max (V)	Ie_Min (mW/sr)	Ie_Typ (mW/sr)	Viewing Angle (°)
IR42-21C/TR8	3.2x2.4x2.5	940	1.2	1.5	1	3	30

UNIT : mm

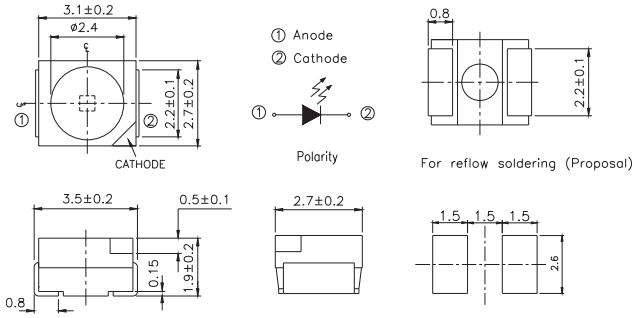

Product	Size (LXWXHmm)	λ_P (nm)	V_F Typ (V)	V_F Max (V)	Ie_Min (mW/sr)	Ie_Typ (mW/sr)	Viewing Angle (°)
HIR67-21C/L11/TR8	3.5x2.7x1.9	850	1.45	1.65	1	2	120
IR67-21C/TR8	3.5x2.7x1.9	940	1.2	1.5	1	1.5	120
SIR67-21C/TR8	3.5x2.7x1.9	875	1.3	1.6	0.5	1.1	120

UNIT : mm

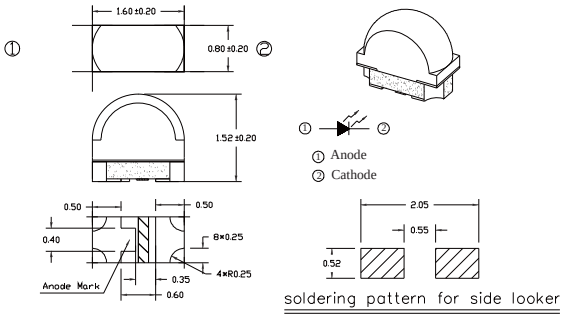

Product	Size (LXWXHmm)	λ_P (nm)	V_F Typ (V)	V_F Max (V)	Ie_Min (mW/sr)	Ie_Typ (mW/sr)	Viewing Angle (°)
HIR83-01B/TR8	1.6x0.8x1.52	850	1.4	1.4	2	5	100(X) 40(Y)

Infrared LED and Silicon Detector ❙ Emitter ❙ SMD

UNIT : mm

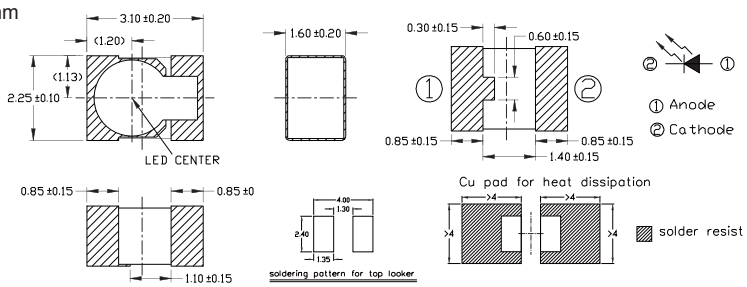

Product	Size (LXWXHmm)	λ_P (nm)	V_F Typ (V)	V_F Max (V)	Ie_Min (mW/sr)	Ie_Typ (mW/sr)	Viewing Angle (°)
HIR89-01C/1R	3.1x2.25x1.6	850	1.4	1.7	25	55	30

UNIT : mm

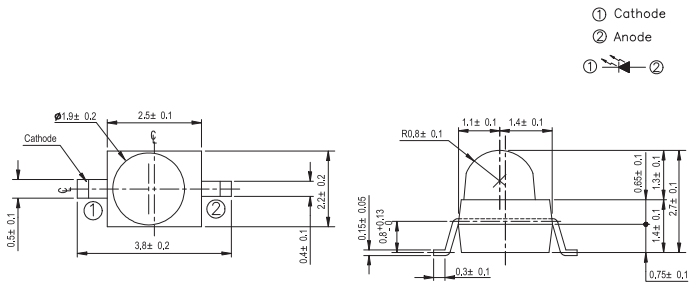

Product	Size (LXWXHmm)	λ_P (nm)	V_F Typ (V)	V_F Max (V)	Ie_Min (mW/sr)	Ie_Typ (mW/sr)	Viewing Angle (°)
IR91-21C	2.5x2.2x2.7	940	1.2	1.5	3	5	25
IR91-21C/TR7	2.5x2.2x2.7	940	1.2	1.5	3	5	25
IR91-21C/TR10	2.5x2.2x2.7	940	1.2	1.5	3	5	25

UNIT : mm

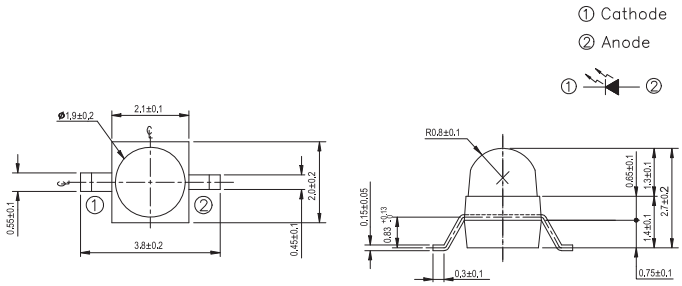

Product	Size (LXWXHmm)	λ_P (nm)	V_F Typ (V)	V_F Max (V)	Ie_Min (mW/sr)	Ie_Typ (mW/sr)	Viewing Angle (°)
IR95-21C/TR7	2.1x2.0x2.7	940	1.2	1.5	3	5	25

Infrared LED and Silicon Detector I Photo Diode I DIP

UNIT : mm

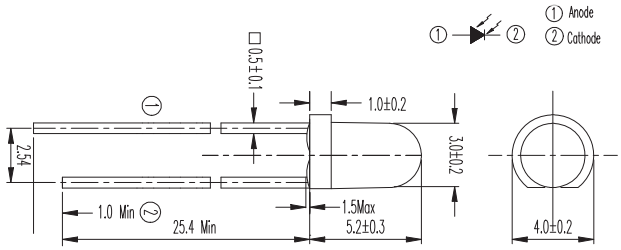

Product	Size (LXWXHmm)	λ_P (nm)	I_L Min (μA)	I_L Typ (μA)	Rise / Fall Time (ns)	BVR_Min (V)	ID_Max (nA)
PD204-6C/L3	3	940	--	10	10 / 10	32	10

UNIT : mm

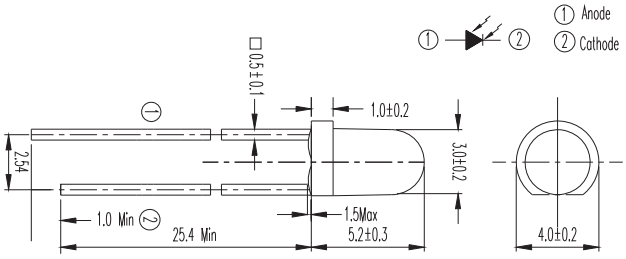

Product	Size (LXWXHmm)	λ_P (nm)	I_L Min (μA)	I_L Typ (μA)	Rise / Fall Time (ns)	BVR_Min (V)	ID_Max (nA)
PD204-6B	3	940	1	3	6 / 6	32	10

UNIT : mm

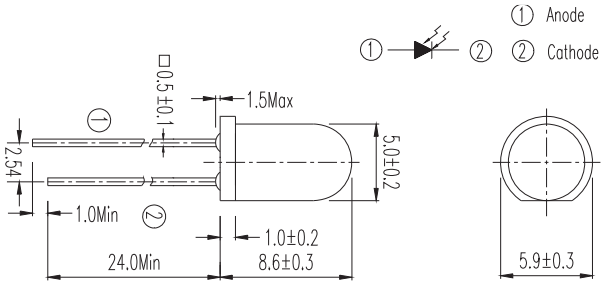

Product	Size (LXWXHmm)	λ_P (nm)	I_L Min (μA)	I_L Typ (μA)	Rise / Fall Time (ns)	BVR_Min (V)	ID_Max (nA)
PD333-3C/H0/L2	5	940	36	40	45 / 45	32	30

UNIT : mm

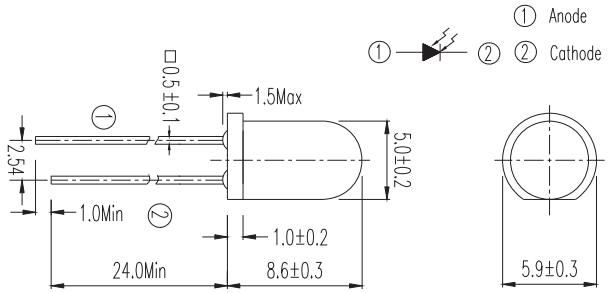

Product	Size (LXWXHmm)	λ_P (nm)	I_L Min (μA)	I_L Typ (μA)	Rise / Fall Time (ns)	BVR_Min (V)	ID_Max (nA)
PD333-3B/H0/L2	5	940	25	35	45 / 45	32	30

Infrared LED and Silicon Detector I Photo Diode I Side Look

UNIT : mm

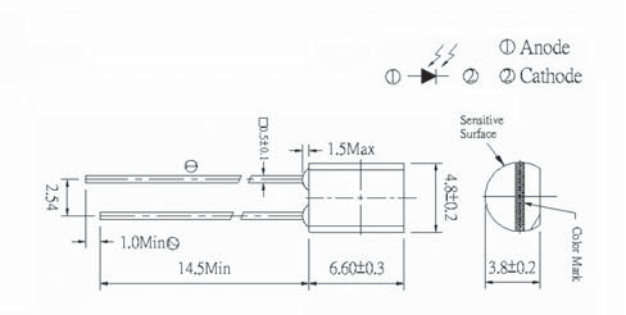

Product	Size (LXWXHmm)	λ_P (nm)	I_L Min (μA)	I_L Typ (μA)	Rise / Fall Time (ns)	BVR_Min.(V)	ID_Max (nA)
PD438C	4.8x3.8x6.6	940	10.2	18	50 / 50	32	30
PD438C/S46	4.8x3.8x6.6	940	10.2	18	50 / 50	32	30

UNIT : mm

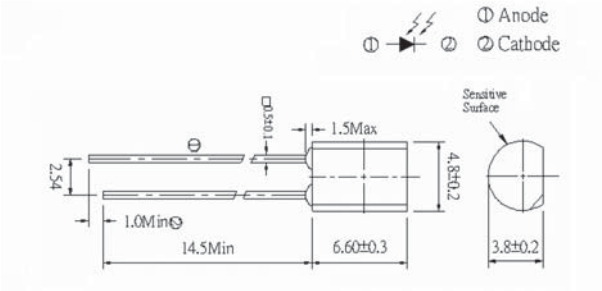

Product	Size (LXWXHmm)	λ_P (nm)	I_L Min (μA)	I_L Typ (μA)	Rise / Fall Time (ns)	BVR_Min.(V)	ID_Max (nA)
PD438B	4.8x3.8x6.6	940	10.2	18	50 / 50	32	30
PD438B/L1	4.8x3.8x6.6	940	10.2	18	50 / 50	32	30
PD438B/S46	4.8x3.8x6.6	940	10.2	18	50 / 50	32	30

UNIT : mm

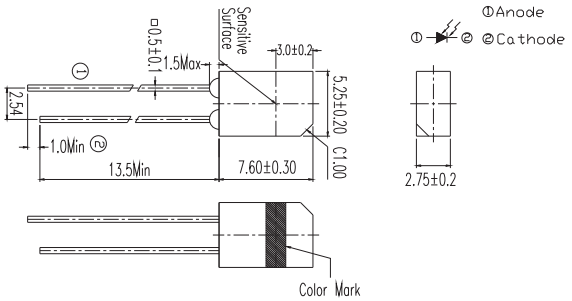

Product	Size (LXWXHmm)	λ_P (nm)	I_L Min (μA)	I_L Typ (μA)	Rise / Fall Time (ns)	BVR_Min.(V)	ID_Max (nA)
PD638B	5.2x2.75x7.6	940	10.2	18	50 / 50	32	30

Infrared LED and Silicon Detector I Photo Diode I SMD

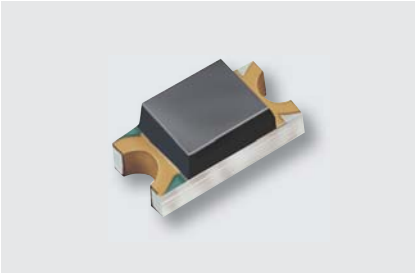

UNIT : mm

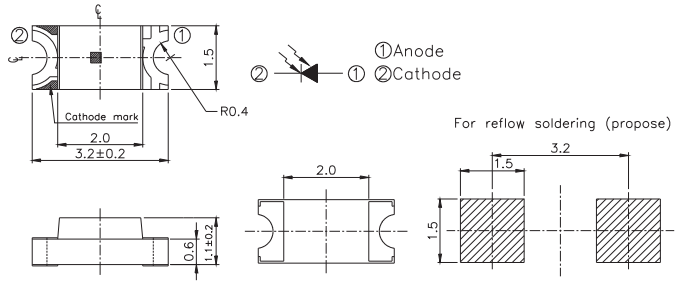

Product	Size (LXWXHmm)	λ_P (nm)	I_L Min (μA)	I_L Typ (μA)	Rise / Fall Time (ns)	BVR_Min.(V)	ID_Max (nA)
PD15-21B/TR8	3.2x1.5x1.1	940	0.2	0.8	6 / 6	32	10

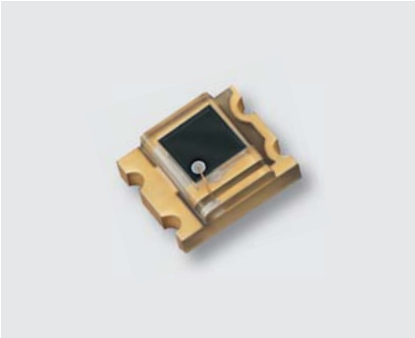

UNIT : mm

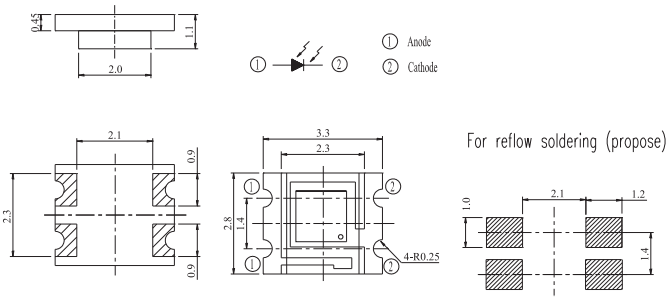

Product	Size (LXWXHmm)	λ_P (nm)	I_L Min (μA)	I_L Typ (μA)	Rise / Fall Time (ns)	BVR_Min.(V)	ID_Max (nA)
PD15-22B/TR8	3.3x2.8x1.1	940	4.2	6.5	10 / 10	32	10

UNIT : mm

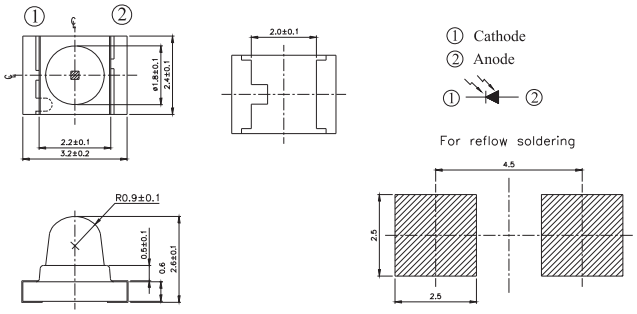

Product	Size (LXWXHmm)	λ_P (nm)	I_L Min (μA)	I_L Typ (μA)	Rise / Fall Time (ns)	BVR_Min.(V)	ID_Max (nA)
PD42-21B/TR8	3.2x2.4x2.6	940	2	4	6 / 6	32	10
PD42-21C/TR8	3.2x2.4x2.6	940	2	5	6 / 6	32	10

Infrared LED and Silicon Detector I Photo Diode I SMD

UNIT : mm

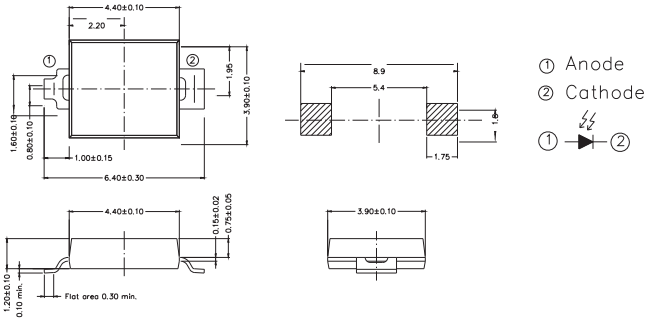

Product	Size (LXWXHmm)	λ_P (nm)	I_L Min (μA)	I_L Typ (μA)	Rise / Fall Time (ns)	BVR_Min.(V)	ID_Max (nA)
PD70-01B/TR7	4.4x3.9x1.2	940	17	25	50 / 50	32	30
PD70-01C/TR7	4.4x3.9x1.2	940	17	25	50 / 50	32	30

UNIT : mm

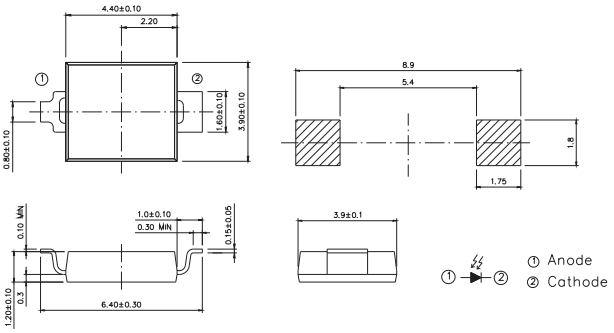

Product	Size (LXWXHmm)	λ_P (nm)	I_L Min (μA)	I_L Typ (μA)	Rise / Fall Time (ns)	BVR_Min.(V)	ID_Max (nA)
PD70-01B/TR10	4.4x3.9x1.2	940	17	25	50 / 50	32	30
PD70-01C/TR10	4.4x3.9x1.2	940	17	25	50 / 50	32	30

UNIT : mm

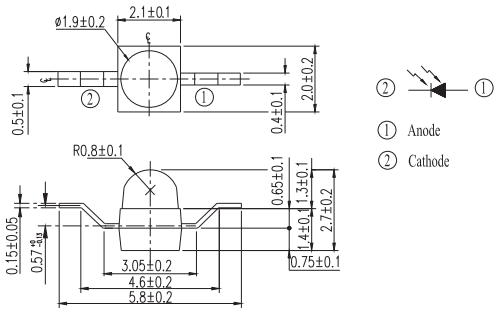

Product	Size (LXWXHmm)	λ_P (nm)	I_L Min (μA)	I_L Typ (μA)	Rise / Fall Time (ns)	BVR_Min.(V)	ID_Max (nA)
PD95-21B/TR10	2.1x2.0x2.7	940	--	4	6 / 6	32	10

Infrared LED and Silicon Detector I Photo Transistor I DIP

UNIT : mm

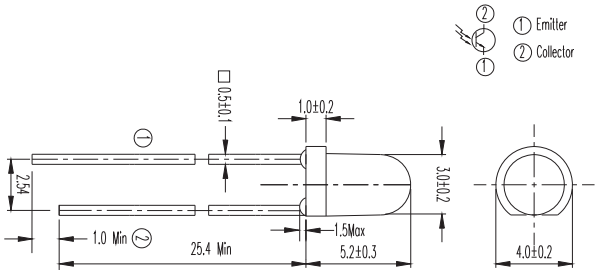

Product	Size (mm)	λ_P (nm)	Rise / Fall Time (μs)	$V_{CE(SAT)}$_Max (V)	$I_{C(ON)}$_Min (mA)	$I_{C(ON)}$_Typ (mA)	$I_{C(ON)}$_Max (mA)
PT204-6C	3	940	15 / 15	0.4	0.7	2	--

UNIT : mm

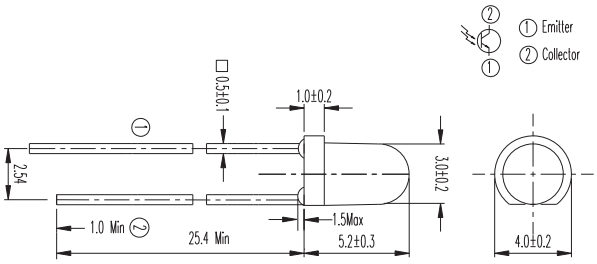

Product	Size (mm)	λ_P (nm)	Rise / Fall Time (μs)	$V_{CE(SAT)}$_Max (V)	$I_{C(ON)}$_Min (mA)	$I_{C(ON)}$_Typ (mA)	$I_{C(ON)}$_Max (mA)
PT204-6B	3	940	15 / 15	0.4	0.7	--	5.07

UNIT : mm

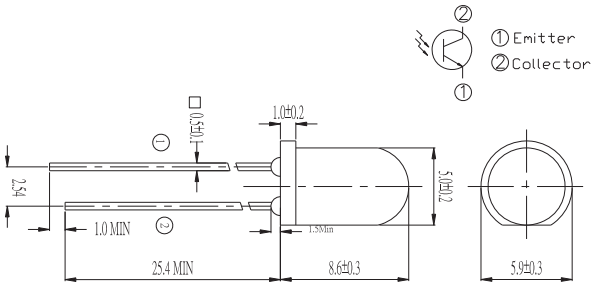

Product	Size (mm)	λ_P (nm)	Rise / Fall Time (μs)	$V_{CE(SAT)}$_Max (V)	$I_{C(ON)}$_Min (mA)	$I_{C(ON)}$_Typ (mA)	$I_{C(ON)}$_Max (mA)
PT333-3C	5	940	15 / 15	0.4	0.7	4	--

Infrared LED and Silicon Detector I Photo Transistor I DIP

UNIT : mm

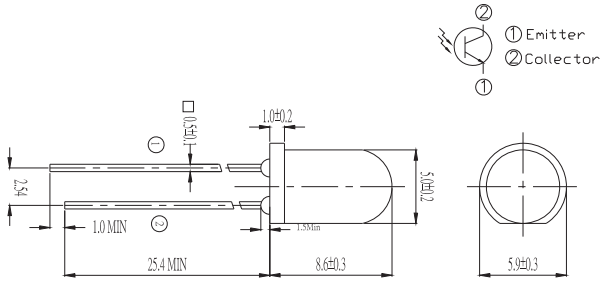

Product	Size (mm)	λ_P (nm)	Rise / Fall Time (μs)	$V_{CE(SAT)}$_Max (V)	$I_{C(ON)}$_Min (mA)	$I_{C(ON)}$_Typ (mA)	$I_{C(ON)}$_Max (mA)
PT333-3B	5	940	15 / 15	0.4	0.7	3	--

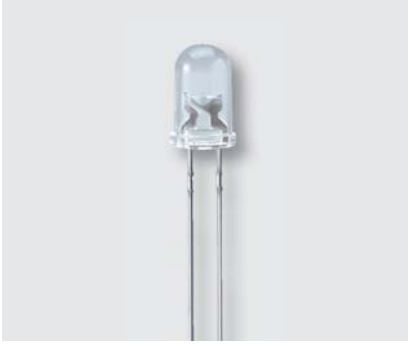

UNIT : mm

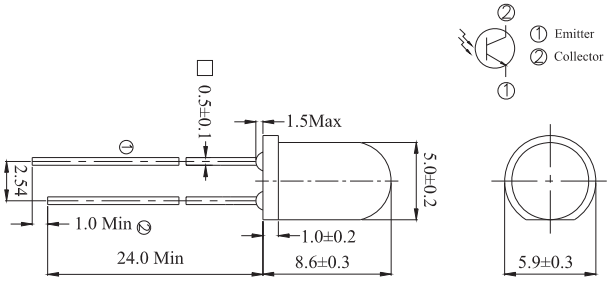

Product	Size (mm)	λ_P (nm)	Rise / Fall Time (μs)	$V_{CE(SAT)}$_Max (V)	$I_{C(ON)}$_Min (mA)	$I_{C(ON)}$_Typ (mA)	$I_{C(ON)}$_Max (mA)
PT334-6C	5	940	15 / 15	0.4	1.77	3.5	--

UNIT : mm

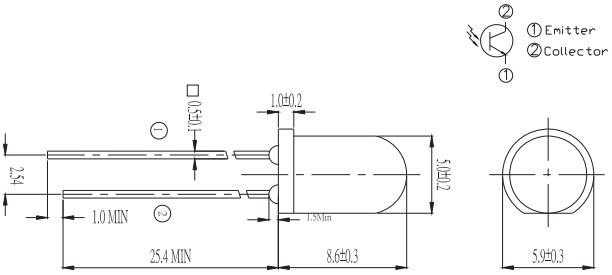

Product	Size (mm)	λ_P (nm)	Rise / Fall Time (μs)	$V_{CE(SAT)}$_Max (V)	$I_{C(ON)}$_Min (mA)	$I_{C(ON)}$_Typ (mA)	$I_{C(ON)}$_Max (mA)
PT334-6B	5	940	15 / 15	0.4	0.7	2	--

Infrared LED and Silicon Detector ❙ Photo Transistor ❙ DIP

UNIT : mm

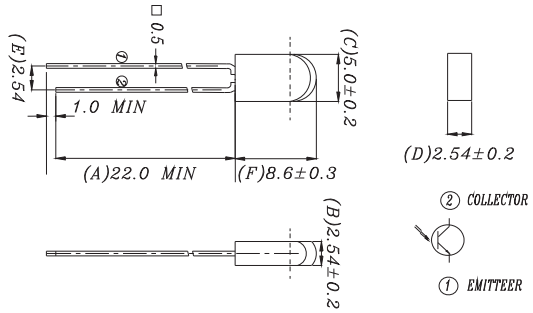

Product	Size (mm)	λ_P (nm)	Rise / Fall Time (μs)	$V_{CE(SAT)}$_Max (V)	$I_{C(ON)}$_Min (mA)	$I_{C(ON)}$_Typ (mA)	$I_{C(ON)}$_Max (mA)
PT534-6B	5	940	15 / 15	0.4	0.7	1.2	--

UNIT : mm

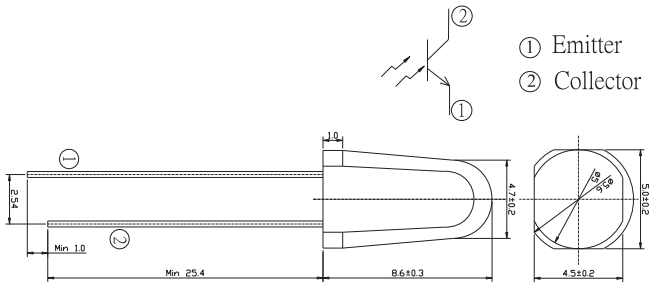

Product	Size (mm)	λ_P (nm)	Rise / Fall Time (μs)	$V_{CE(SAT)}$_Max (V)	$I_{C(ON)}$_Min (mA)	$I_{C(ON)}$_Typ (mA)	$I_{C(ON)}$_Max (mA)
PT1504-6B	5	940	15 / 15	0.4	1.77	4	--

Infrared LED and Silicon Detector I Photo Transistor I Side Look

UNIT : mm

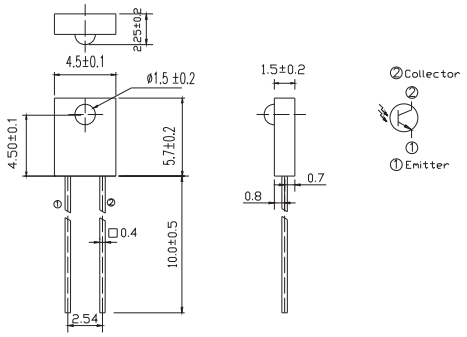

Product	Size (mm)	λ_P (nm)	Rise / Fall Time (μs)	$V_{CE(SAT)}$_Max (V)	$I_{C(ON)}$_Min (mA)	$I_{C(ON)}$_Typ (mA)	$I_{C(ON)}$_Max (mA)
PT908-7B-F	4.5x2.25x5.7	940	15 / 15	0.4	0.8	--	5
PT908-7C-F	4.5x2.25x5.7	940	15 / 15	0.4	0.8	--	5

UNIT : mm

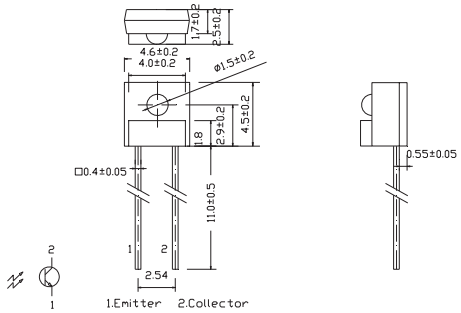

Product	Size (mm)	λ_P (nm)	Rise / Fall Time (μs)	$V_{CE(SAT)}$_Max (V)	$I_{C(ON)}$_Min (mA)	$I_{C(ON)}$_Typ (mA)	$I_{C(ON)}$_Max (mA)
PT928-6B-F	4.6x2.5x4.5	940	15 / 15	0.4	0.53	--	3.41
PT928-6C-F	4.6x2.5x4.5	940	15 / 15	0.4	0.53	--	3.41

UNIT : mm

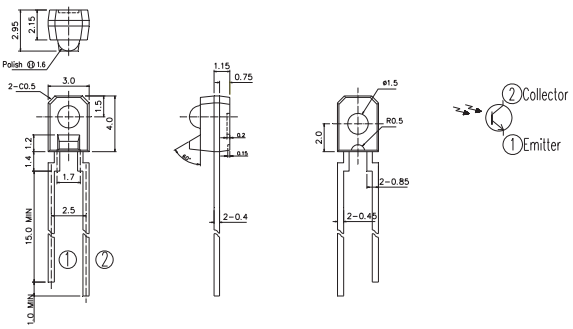

Product	Size (mm)	λ_P (nm)	Rise / Fall Time (μs)	$V_{CE(SAT)}$_Max (V)	$I_{C(ON)}$_Min (mA)	$I_{C(ON)}$_Typ (mA)	$I_{C(ON)}$_Max (mA)
PT958-8C	3.0x2.95x4.0	940	15 / 15	0.4	0.53	--	3.41

Infrared LED and Silicon Detector ❙ Photo Transistor ❙ Side Look

UNIT : mm

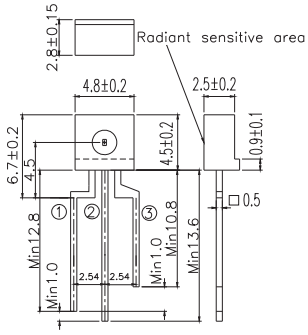

Product	Size (mm)	λ_P (nm)	Rise / Fall Time (μs)	$V_{CE(SAT)}$_Max (V)	$I_{C(ON)}$_Min (mA)	$I_{C(ON)}$_Typ (mA)	$I_{C(ON)}$_Max (mA)
PT2559B-F	4.8x2.8x4.5	940	15 / 15	0.4	0.129	--	1.018
PT2559B/L2-F	4.8x2.8x4.5	940	15 / 15	0.4	0.129	--	1.085
PT2559B/L2/H2-F	4.8x2.8x4.5	940	15 / 15	0.4	0.129	--	1.085
PT5529B/L2-F	4.8x2.8x4.5	940	15 / 15	0.4	0.129	--	1.085
PT5529B/L2/H2-F	4.8x2.8x4.5	940	15 / 15	0.4	0.129	--	1.085

Infrared LED and Silicon Detector I Photo Transistor I SMD

UNIT : mm

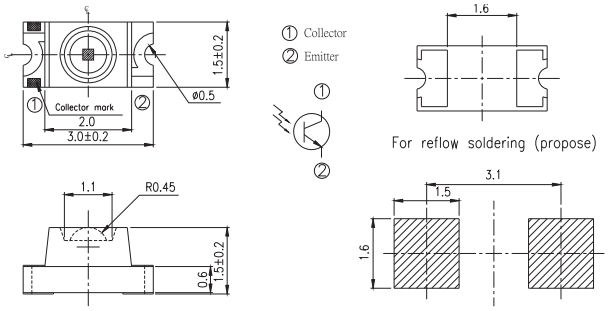

Product	Size (mm)	λ_P (nm)	Rise / Fall Time (μs)	$V_{CE(SAT)}$_Max (V)	$I_{C(ON)}$_Min (mA)	$I_{C(ON)}$_Typ (mA)	$I_{C(ON)}$_Max (mA)
PT11-21C/L41/TR8	3.0x1.5x1.5	940	15 / 15	0.4	0.3	0.8	--

UNIT : mm

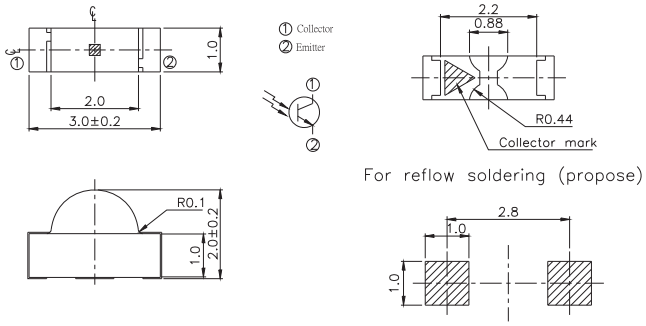

Product	Size (mm)	λ_P (nm)	Rise / Fall Time (μs)	$V_{CE(SAT)}$_Max (V)	$I_{C(ON)}$_Min (mA)	$I_{C(ON)}$_Typ (mA)	$I_{C(ON)}$_Max (mA)
PT12-21B/TR8	3.0x1.0x2.0	940	15 / 15	0.4	0.3	1.14	--
PT12-21C/TR8	3.0x1.0x2.0	940	15 / 15	0.4	0.3	1.14	--

UNIT : mm

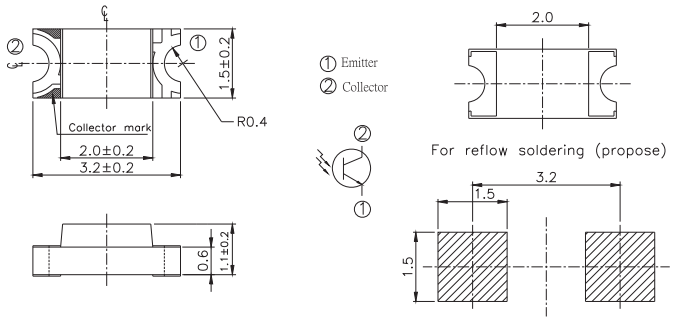

Product	Size (mm)	λ_P (nm)	Rise / Fall Time (μs)	$V_{CE(SAT)}$_Max (V)	$I_{C(ON)}$_Min (mA)	$I_{C(ON)}$_Typ (mA)	$I_{C(ON)}$_Max (mA)
PT15-21B/TR8	3.2x1.5x1.1	940	15 / 15	0.4	0.1	0.3	--
PT15-21C/TR8	3.2x1.5x1.1	940	15 / 15	0.4	0.1	0.3	--

Infrared LED and Silicon Detector I Photo Transistor I SMD

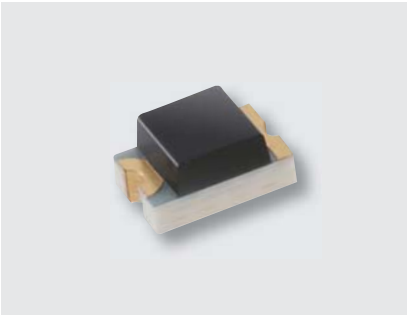

UNIT : mm

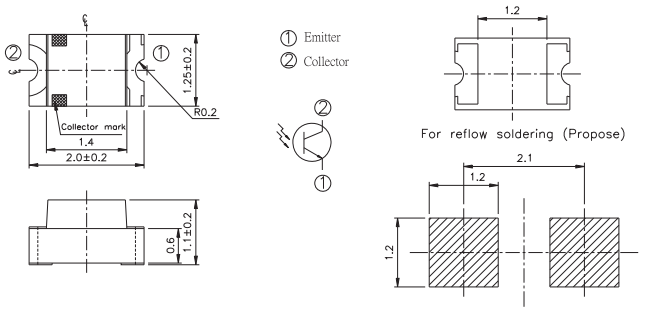

Product	Size (mm)	λ_P (nm)	Rise / Fall Time (μs)	$V_{CE(SAT)}$_Max (V)	$I_{C(ON)}$_Min (mA)	$I_{C(ON)}$_Typ (mA)	$I_{C(ON)}$_Max (mA)
PT17-21B/L41/TR8	2.0x1.25x1.1	940	15 / 15	0.4	0.1	0.65	--
PT17-21C/L41/TR8	2.0x1.25x1.1	940	15 / 15	0.4	0.3	1	--

UNIT : mm

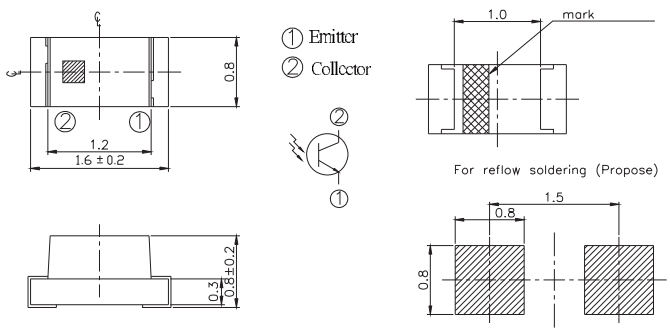

Product	Size (mm)	λ_P (nm)	Rise / Fall Time (μs)	$V_{CE(SAT)}$_Max (V)	$I_{C(ON)}$_Min (mA)	$I_{C(ON)}$_Typ (mA)	$I_{C(ON)}$_Max (mA)
PT19-21B/L41/TR8	1.6x0.8x0.8	940	15 / 15	0.4	0.3	0.6	--
PT19-21C/L41/TR8	1.6x0.8x0.8	940	15 / 15	0.4	0.3	0.6	--

UNIT : mm

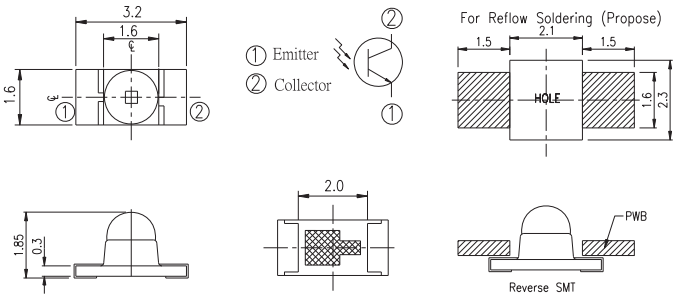

Product	Size (mm)	λ_P (nm)	Rise / Fall Time (μs)	$V_{CE(SAT)}$_Max (V)	$I_{C(ON)}$_Min (mA)	$I_{C(ON)}$_Typ (mA)	$I_{C(ON)}$_Max (mA)
PT26-21B/TR8	3.2x1.6x1.85	940	15 / 15	0.4	--	1	--
PT26-21C/TR8	3.2x1.6x1.85	940	15 / 15	0.4	0.3	2.6	--

Infrared LED and Silicon Detector I Photo Transistor I SMD

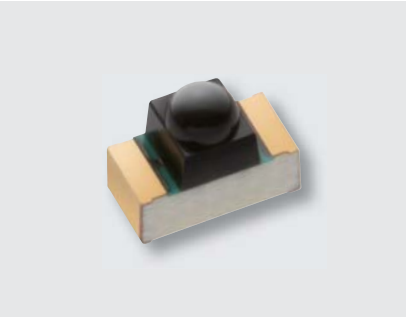

UNIT : mm

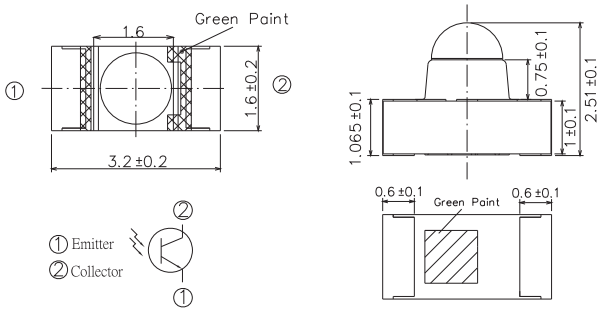

Product	Size (mm)	λ_P (nm)	Rise / Fall Time (μs)	$V_{CE(SAT)}$_Max (V)	$I_{C(ON)}$_Min (mA)	$I_{C(ON)}$_Typ (mA)	$I_{C(ON)}$_Max (mA)
PT26-51B/TR8	3.2x1.6x2.5	940	15 / 15	0.4	--	1	--

UNIT : mm

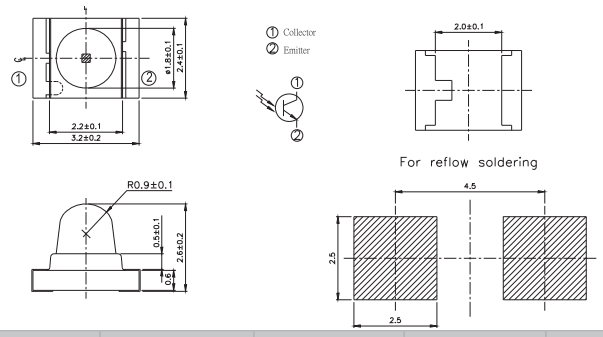

Product	Size (mm)	λ_P (nm)	Rise / Fall Time (μs)	$V_{CE(SAT)}$_Max (V)	$I_{C(ON)}$_Min (mA)	$I_{C(ON)}$_Typ (mA)	$I_{C(ON)}$_Max (mA)
PT42-21B/TR8	3.2x2.4x2.6	940	15 / 15	0.4	1.77	3	--

UNIT : mm

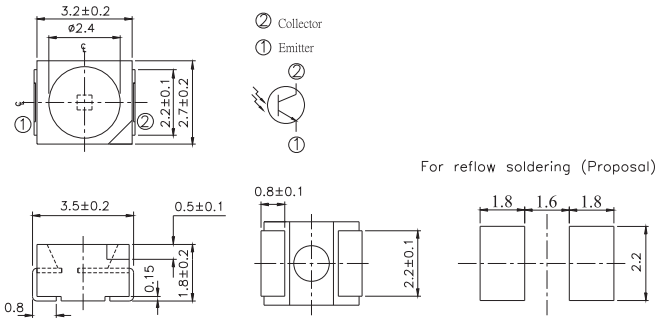

Product	Size (mm)	λ_P (nm)	Rise / Fall Time (μs)	$V_{CE(SAT)}$_Max (V)	$I_{C(ON)}$_Min (mA)	$I_{C(ON)}$_Typ (mA)	$I_{C(ON)}$_Max (mA)
PT67-21B/C14/TR8	3.5x2.7x1.8	940	15 / 15	0.4	0.016	--	0.08

Infrared LED and Silicon Detector I Photo Transistor I SMD

UNIT : mm

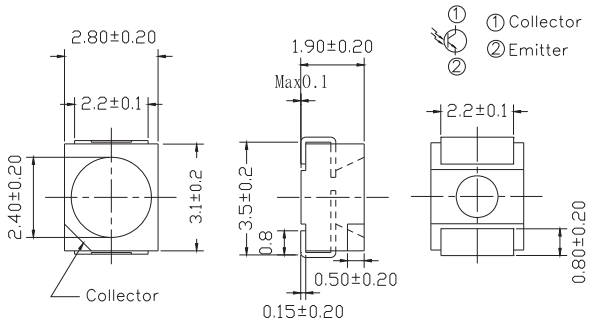

Product	Size (mm)	λ_P (nm)	Rise / Fall Time (μs)	$V_{CE(SAT)}$_Max (V)	$I_{C(ON)}$_Min (mA)	$I_{C(ON)}$_Typ (mA)	$I_{C(ON)}$_Max (mA)
PT67-21C/L41/TR8	3.5x2.8x1.9	940	15 / 15	0.4	0.3	--	1

UNIT : mm

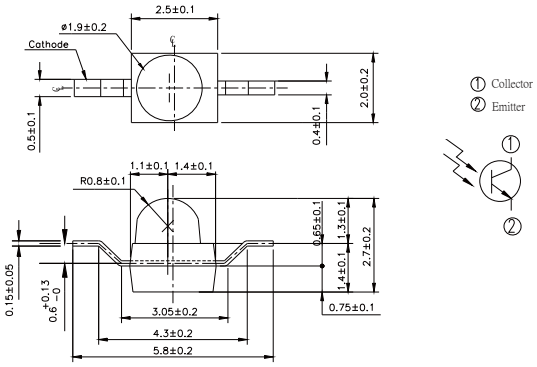

Product	Size (mm)	λ_P (nm)	Rise / Fall Time (μs)	$V_{CE(SAT)}$_Max (V)	$I_{C(ON)}$_Min (mA)	$I_{C(ON)}$_Typ (mA)	$I_{C(ON)}$_Max (mA)
PT91-21B	2.5x2.0x2.7	940	15 / 15	0.4	1	1.5	--
PT91-21B/TR10	2.5x2.0x2.7	940	15 / 15	0.4	1	1.5	--
PT91-21B/TR7	2.5x2.0x2.7	940	15 / 15	0.4	1	1.5	--
PT91-21B/TR9	2.5x2.0x2.7	940	15 / 15	0.4	1	1.5	--

UNIT : mm

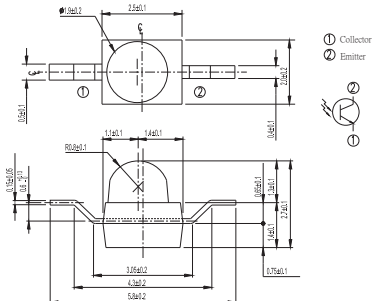

Product	Size (mm)	λ_P (nm)	Rise / Fall Time (μs)	$V_{CE(SAT)}$_Max (V)	$I_{C(ON)}$_Min (mA)	$I_{C(ON)}$_Typ (mA)	$I_{C(ON)}$_Max (mA)
PT91-21C	2.5x2.0x2.7	940	15 / 15	0.4	1	1.5	--
PT91-21C/TR10	2.5x2.0x2.7	940	15 / 15	0.4	1	1.5	--
PT91-21C/TR7	2.5x2.0x2.7	940	15 / 15	0.4	1	1.5	--

Infrared Receiver Module ❙ 33KHz ❙ IRM-8xxx Vo-GND-Vcc ❙ Standard Burst

UNIT : mm

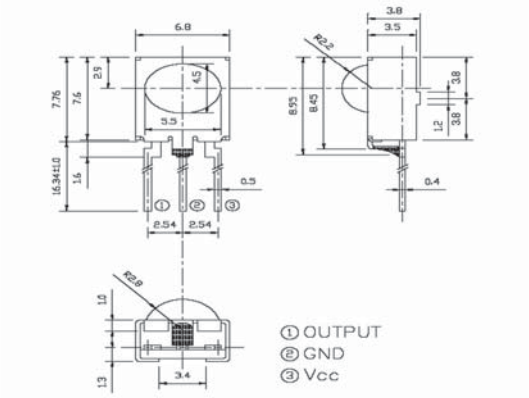

Product	Size (mm)	λ_P (nm)	Carrier Freq. (KHz)	Supply Voltage (V)	I_{CC} Typ (mA)	L_{Center} (m)	L_{45} (m)
IRM-8601K-1	9.2x6.8x6.0	940	33	5	--	8	4

UNIT : mm

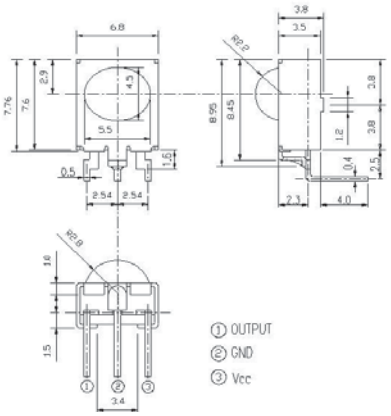

Product	Size (mm)	λ_P (nm)	Carrier Freq. (KHz)	Supply Voltage (V)	I_{CC} Typ (mA)	L_{Center} (m)	L_{45} (m)
IRM-8602K-1	10.1x6.8x6.0	940	33	5	--	8	4

Infrared Receiver Module ❙ 33KHz ❙ IRM-8xxx Vo-GND-Vcc ❙ Standard Burst

UNIT : mm

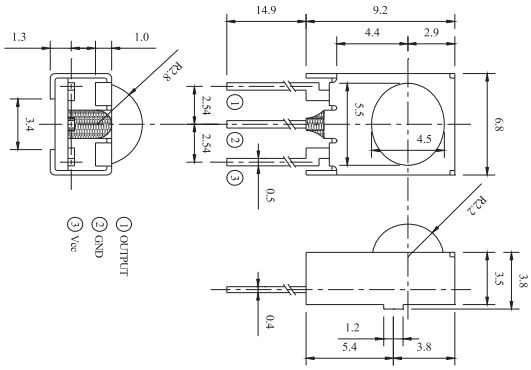

Product	Size (mm)	λ_P (nm)	Carrier Freq. (KHz)	Supply Voltage (V)	I_{CC} Typ (mA)	L_{Center} (m)	L_{45} (m)
IRM-8608K-1	9.2x6.8x6.0	940	33	5	--	8	4

UNIT : mm

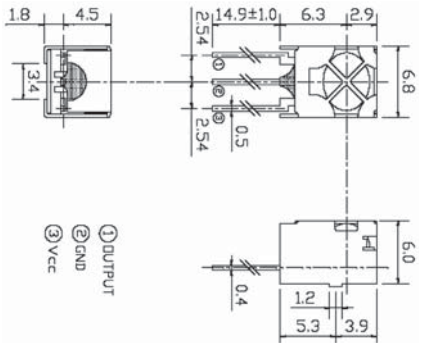

Product	Size (mm)	λ_P (nm)	Carrier Freq. (KHz)	Supply Voltage (V)	I_{CC} Typ (mA)	L_{Center} (m)	L_{45} (m)
IRM-8751K-1	9.2x6.8x6.0	940	33	5	--	8	4

Infrared Receiver Module ❙ 33KHz ❙ IRM-8xxx Vo-GND-Vcc ❙ Standard Burst

UNIT : mm

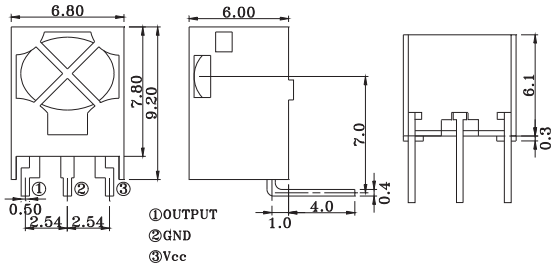

Product	Size (mm)	λ_P (nm)	Carrier Freq. (KHz)	Supply Voltage (V)	I_{CC} Typ (mA)	L_{Center} (m)	L_{45} (m)
IRM-8752K-1	9.2x6.8x6.0	940	33	5	-	8	4

UNIT : mm

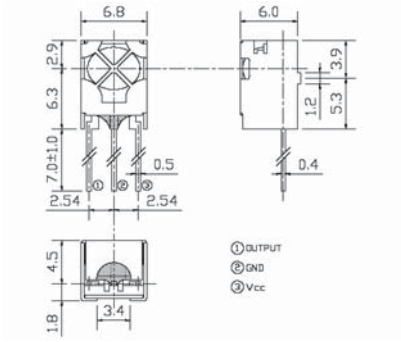

Product	Size (mm)	λ_P (nm)	Carrier Freq. (KHz)	Supply Voltage (V)	I_{CC} Typ (mA)	L_{Center} (m)	L_{45} (m)
IRM-8753K-1	9.2x6.8x6.0	940	33	5	-	8	4

UNIT : mm

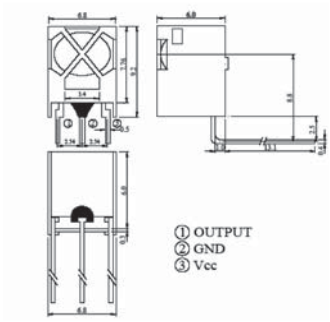

Product	Size (mm)	λ_P (nm)	Carrier Freq. (KHz)	Supply Voltage (V)	I_{CC} Typ (mA)	L_{Center} (m)	L_{45} (m)
IRM-8755K-1	9.2x6.8x6.0	940	33	5	-	8	4

Infrared Receiver Module ❙ 36KHz ❙ DIP-Vo-GND-Vcc ❙ Standard Burst

UNIT : mm

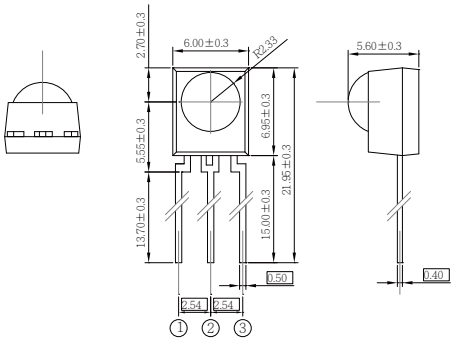

Product	Size (mm)	λ_P (nm)	Carrier Freq. (KHz)	Supply Voltage (V)	I_{CC} Typ (mA)	L_{Center} (m)	L_{45} (m)
IRM-3636M3	8.25x6.0x5.6	940	36	3~5	0.4	14	6
IRM-3636T	8.25x6.0x5.6	940	36	3~5	1	14	6

Infrared Receiver Module ❙ 36KHz ❙ DIP-Vo-GND-Vcc ❙ Short Burtst

UNIT : mm

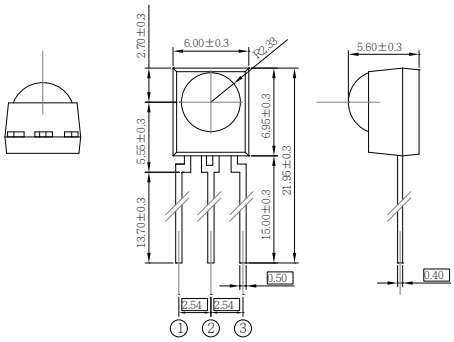

Product	Size (mm)	λ_P (nm)	Carrier Freq. (KHz)	Supply Voltage (V)	I_{CC} Typ (mA)	L_{Center} (m)	L_{45} (m)
IRM-3636M	8.25x6.0x5.6	940	36	3~5	0.4	14	6

Infrared Receiver Module ❙ 36KHz ❙ DIP-Vo-Vcc-GND ❙ Standard Burst

UNIT : mm

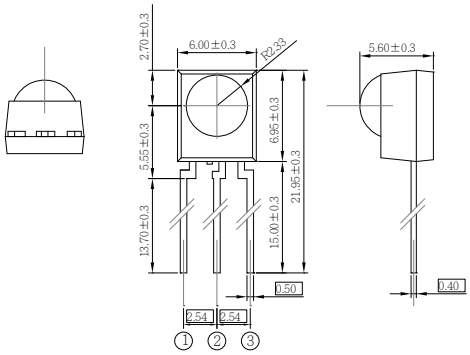

Product	Size (mm)	λ_P (nm)	Carrier Freq. (KHz)	Supply Voltage (V)	I_{CC} Typ (mA)	L_{Center} (m)	L_{45} (m)
IRM-3736M3	8.25x6.0x5.6	940	36	3~5	0.4	14	6

Infrared Receiver Module ❙ 36KHz ❙ DIP-Vo-Vcc-GND ❙ Short Burtst

UNIT : mm

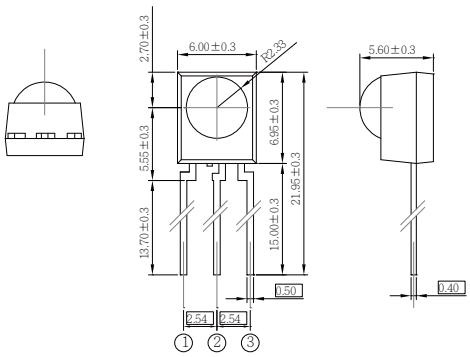

Product	Size (mm)	λ_P (nm)	Carrier Freq. (KHz)	Supply Voltage (V)	I_{CC} Typ (mA)	L_{Center} (m)	L_{45} (m)
IRM-3736M	8.25x6.0x5.6	940	36	3~5	0.4	14	6

Infrared Receiver Module ❙ 36KHz ❙ IRM-8xxx Vo-GND-Vcc ❙ Standard Burst

UNIT : mm

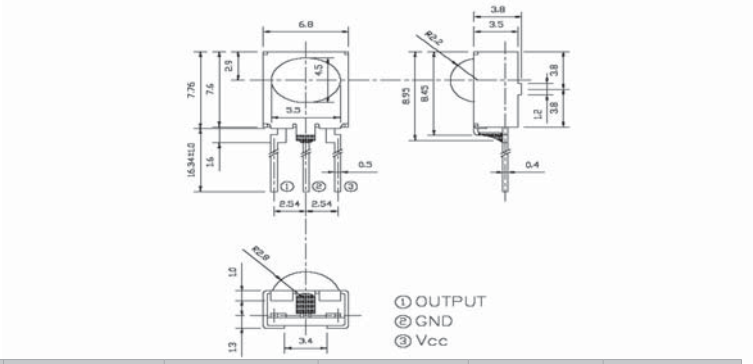

Product	Size (mm)	λ_P (nm)	Carrier Freq. (KHz)	Supply Voltage (V)	I_{CC} Typ (mA)	L_{Center} (m)	L_{45} (m)
IRM-8751K-2	9.2x6.8x6.0	940	36	5	-	8	4

UNIT : mm

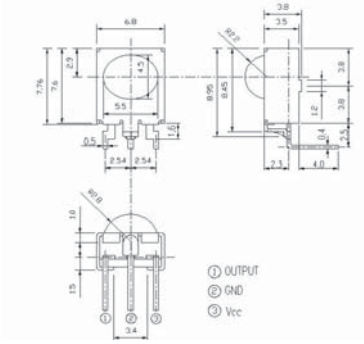

Product	Size (mm)	λ_P (nm)	Carrier Freq. (KHz)	Supply Voltage (V)	I_{CC} Typ (mA)	L_{Center} (m)	L_{45} (m)
IRM-8752K-2	10.1x6.8x6.0	940	36	5	-	8	4

UNIT : mm

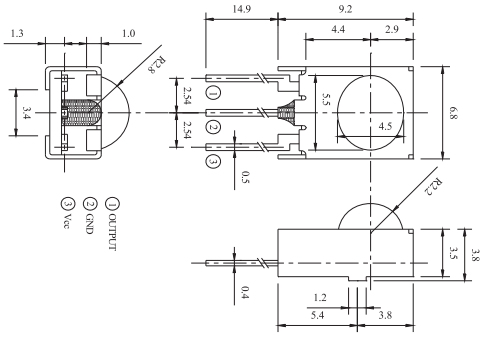

Product	Size (mm)	λ_P (nm)	Carrier Freq. (KHz)	Supply Voltage (V)	I_{CC} Typ (mA)	L_{Center} (m)	L_{45} (m)
IRM-8753K-2	9.2x6.8x6.0	940	36	5	-	8	4

UNIT : mm

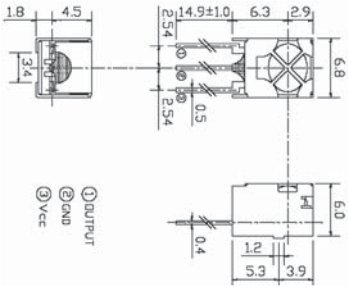

Product	Size (mm)	λ_P (nm)	Carrier Freq. (KHz)	Supply Voltage (V)	I_{CC} Typ (mA)	L_{Center} (m)	L_{45} (m)
IRM-8755K-2	9.2x6.8x6.0	940	36	5	-	8	4

Infrared Receiver Module ❙ 38KHz ❙ DIP-Vo-GND-Vcc ❙ Standard Burst

UNIT : mm

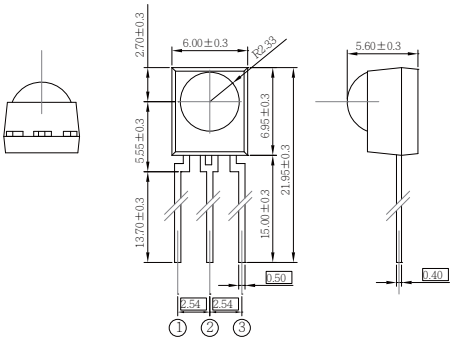

Product	Size (mm)	λ_P (nm)	Carrier Freq. (KHz)	Supply Voltage (V)	I_{CC} Typ (mA)	L_{Center} (m)	L_{45} (m)
IRM-2638T	8.25x6.0x5.6	940	38	5	1.2	14	6
RM-3638L	8.25x6.0x5.6	940	38	3~5	0.33	14	6
IRM-3638M2	8.25x6.0x5.6	940	38	3~5	0.4	14	6
IRM-3638M3	8.25x6.0x5.6	940	38	3~5	0.4	14	6

Infrared Receiver Module ❙ 38KHz ❙ DIP-Vo-GND-Vcc ❙ Short Burtst

UNIT : mm

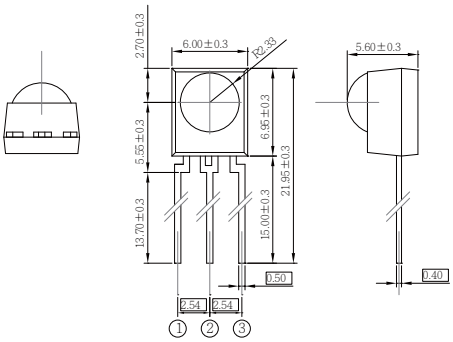

Product	Size (mm)	λ_P (nm)	Carrier Freq. (KHz)	Supply Voltage (V)	I_{CC} Typ (mA)	L_{Center} (m)	L_{45} (m)
IRM-3638M	8.25x6.0x5.6	940	38	3~5	0.4	14	6

Infrared Receiver Module ❙ 38KHz ❙ DIP-Vo-Vcc-GND ❙ Standard Burst

UNIT : mm

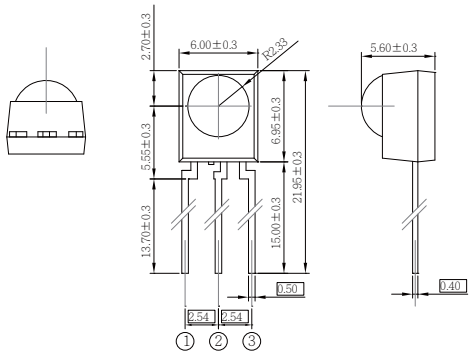

Product	Size (mm)	λ_P (nm)	Carrier Freq. (KHz)	Supply Voltage (V)	I_{CC} Max (mA)	L_{Center} (m)	L_{45} (m)
IRM-3738T	8.25x6.0x5.6	940	38	3~5	1	14	6

Infrared Receiver Module ❙ 38KHz ❙ DIP-Vo-Vcc-GND ❙ Short Burtst

UNIT : mm

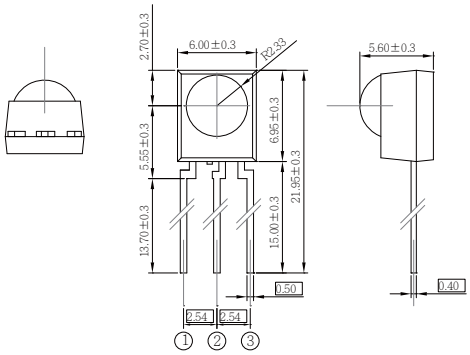

Product	Size (mm)	λ_P (nm)	Carrier Freq. (KHz)	Supply Voltage (V)	I_{CC} Typ (mA)	L_{Center} (m)	L_{45} (m)
IRM-3738M	8.25x6.0x5.6	940	38	3~5	0.4	14	6

Infrared Receiver Module ❙ 38KHz ❙ SMD Top View ❙ Standard Burst

UNIT : mm

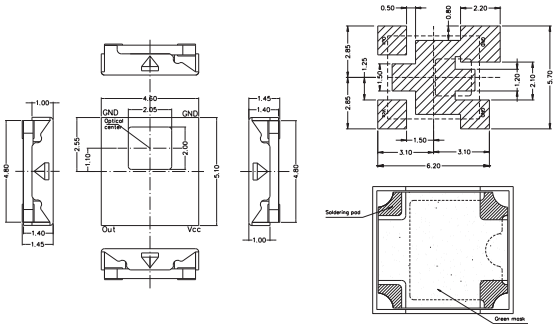

Product	Size (mm)	λ_P (nm)	Carrier Freq. (KHz)	Supply Voltage (V)	I_{CC} Max (mA)	L_{Center} (m)	L_{45} (m)
IRM-H238T/TR2	5.1x4.6x1.45	940	38	3~5	3	8	5

UNIT : mm

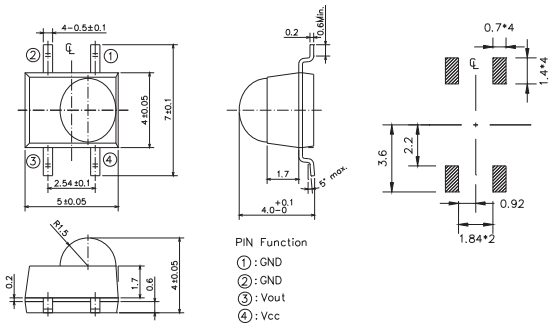

Product	Size (mm)	λ_P (nm)	Carrier Freq. (KHz)	Supply Voltage (V)	I_{CC} Max (mA)	L_{Center} (m)	L_{45} (m)
IRM-H638T/TR2	5.0x4.0x4.0	940	38	3~5	1.2	8	5

Infrared Receiver Module ❙ 38KHz ❙ SMD Side View ❙ Standard Burst

UNIT : mm

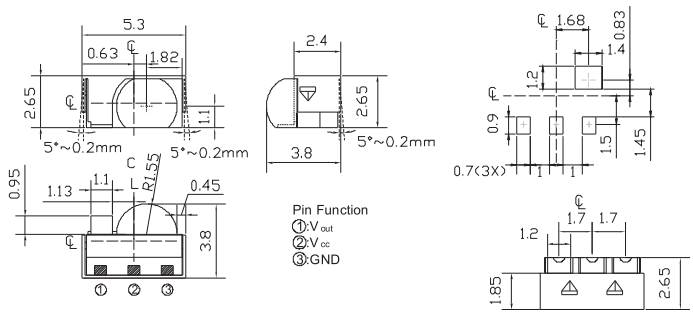

Product	Size (mm)	λ_P (nm)	Carrier Freq. (KHz)	Supply Voltage (V)	I_{CC} Max (mA)	L_{Center} (m)	L_{45} (m)
IRM-V538T/TR1	5.3x3.8x2.65	940	38	3~5	1.2	8	5

Infrared Receiver Module ❙ 40KHz ❙ DIP-Vo-GND-Vcc ❙ Standard Burst

UNIT : mm

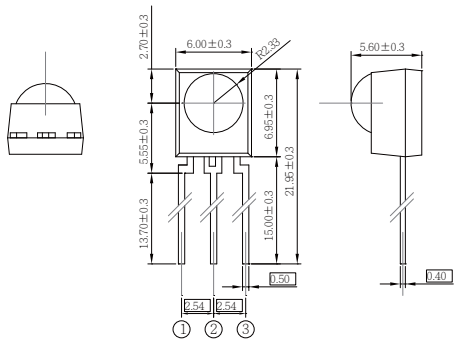

Product	Size (mm)	λ_P (nm)	Carrier Freq. (KHz)	Supply Voltage (V)	I_{CC} Typ (mA)	L_{Center} (m)	L_{45} (m)
IRM-2640T	8.25x6.0x5.6	940	40	5	1.2	14	6
IRM-3640T	8.25x6.0x5.6	940	40	3~5	1	14	6
IRM-3640M2	8.25x6.0x5.6	940	40	3~5	0.4	14	6

Infrared Receiver Module ❙ 56KHz ❙ DIP-Vo-GND-Vcc ❙ Standard Burst

UNIT : mm

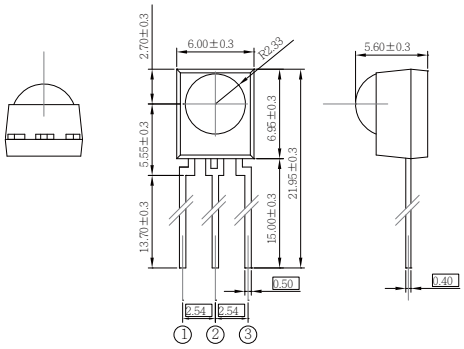

Product	Size (mm)	λ_P (nm)	Carrier Freq. (KHz)	Supply Voltage (V)	I_{CC} Typ (mA)	L_{Center} (m)	L_{45} (m)
IRM-2656T	8.25x6.0x5.6	940	56	5	1.2	14	6
IRM-3656M3	8.25x6.0x5.6	940	56	3~5	0.4	14	6
IRM-3656T	8.25x6.0x5.6	940	56	3~5	1	14	6

Infrared Receiver Module ❙ 56KHz ❙ DIP-Vo-Vcc-GND ❙ Standard Burst

UNIT : mm

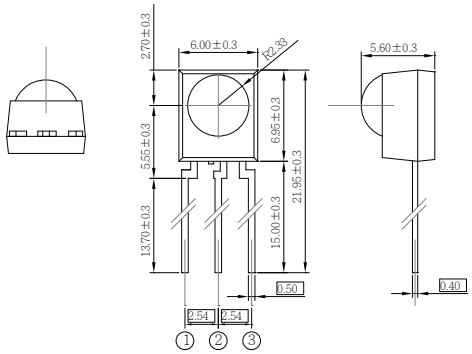

Product	Size (mm)	λ_P (nm)	Carrier Freq. (KHz)	Supply Voltage (V)	I_{CC} Typ (mA)	L_{Center} (m)	L_{45} (m)
IRM-3756M3	8.25x6.0x5.6	940	56	3~5	0.4	14	6

Infrared Receiver Module ❙ 56KHz ❙ IRM-8xxx Vo-GND-Vcc ❙ Standard Burst

UNIT : mm

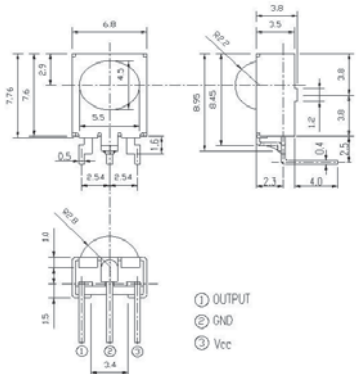

Product	Size (mm)	λ_P (nm)	Carrier Freq. (KHz)	Supply Voltage (V)	I_{CC} Typ (mA)	L_{Center} (m)	L_{45} (m)
IRM-8602K-5	10.1x6.8x6.0	940	56	5	--	8	4

UNIT : mm

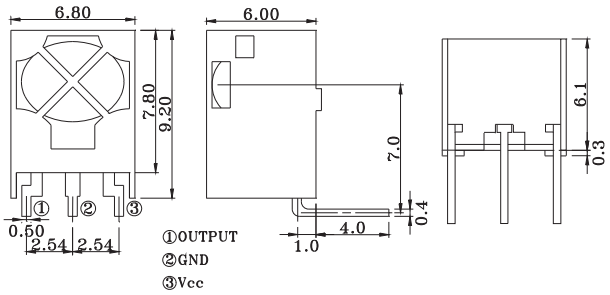

Product	Size (mm)	λ_P (nm)	Carrier Freq. (KHz)	Supply Voltage (V)	I_{CC} Typ (mA)	L_{Center} (m)	L_{45} (m)
IRM-8752K-5	10.1x6.8x6.0	940	56	5	--	8	4

Optic-Fiber Device (Photo Link) ❙ Receiver (PLR) Component

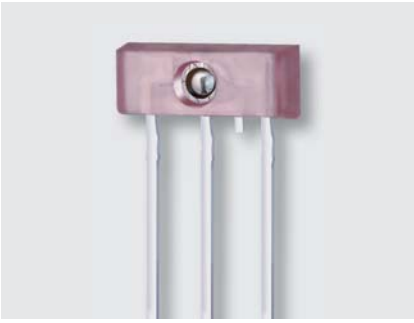

UNIT : mm

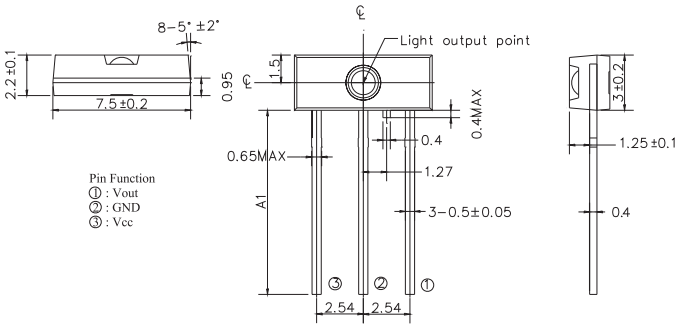

Product	Size (LXWXHmm)	Fiber Coupling Receiver Power_ Max (dBm)	Fiber Coupling Receiver Power_ Min (dBm)	Operation Voltage (V)	Plastic Holder	Trans - mission Speed (Mb/s)	L/F Thicknes (mm)
PLR135	7.5x3.0x2.2	-14	-27	2.4~5.5	None	16	0.4

UNIT : mm

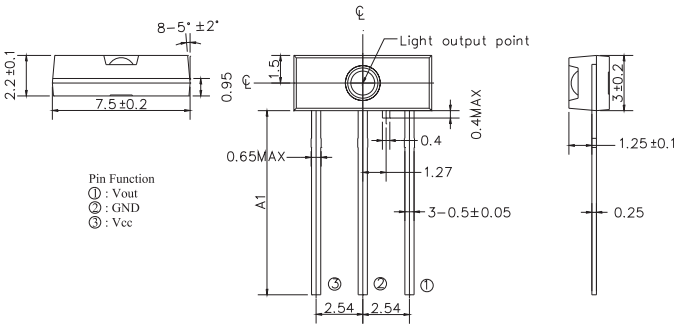

Product	Size (LXWXHmm)	Fiber Coupling Receiver Power_ Max (dBm)	Fiber Coupling Receiver Power_ Min (dBm)	Operation Voltage (V)	Plastic Holder	Trans - mission Speed (Mb/s)	L/F Thicknes (mm)
PLR137	7.5x3.0x2.2	-14	-27	2.4~5.5	None	16	0.25

UNIT : mm

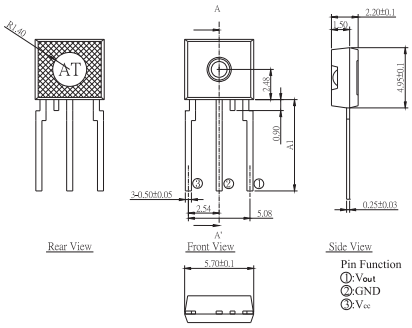

Product	Size (LXWXHmm)	Fiber Coupling Receiver Power_ Max (dBm)	Fiber Coupling Receiver Power_ Min (dBm)	Operation Voltage (V)	Plastic Holder	Trans - mission Speed (Mb/s)	L/F Thicknes (mm)
PLR155	5.70x4.95x2.20	-14	-27	2.4~5.5	None	16	0.25

Optic-Fiber Device (Photo Link) I Receiver (PLR) Component

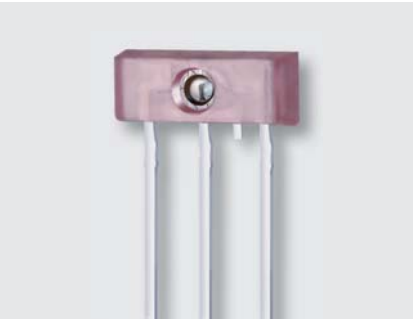

UNIT : mm

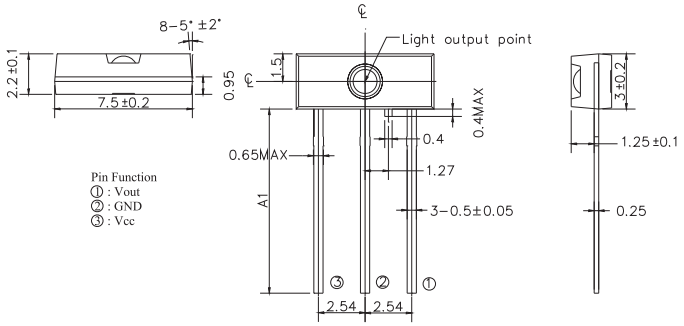

Product	Size (LXWXHmm)	Fiber Coupling Receiver Power_ Max (dBm)	Fiber Coupling Receiver Power_ Min (dBm)	Operation Voltage (V)	Plastic Holder	Trans - mission Speed (Mb/s)	L/F Thicknes (mm)
PLR233	7.5x3.0x2.2	-14	-27	2.4~5.5	None	25	0.4

UNIT : mm

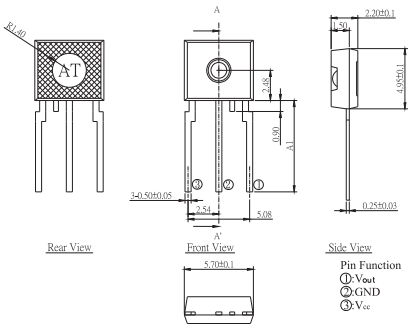

Product	Size (LXWXHmm)	Fiber Coupling Receiver Power_ Max (dBm)	Fiber Coupling Receiver Power_ Min (dBm)	Operation Voltage (V)	Plastic Holder	Trans - mission Speed (Mb/s)	L/F Thicknes (mm)
PLR253	5.70x4.95x2.20	-14	-27	2.4~5.5	None	25	0.25

Optic-Fiber Device (Photo Link) ❙ Receiver (PLR) Module

UNIT : mm

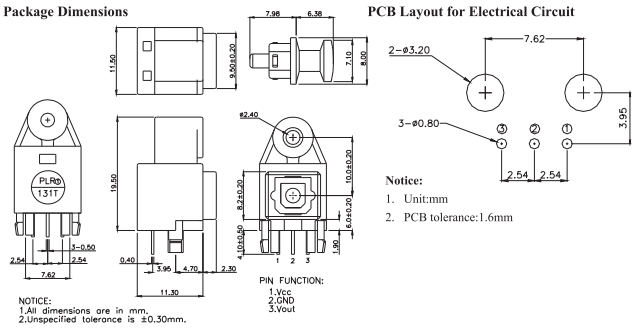

Product	Size (LXWXHmm)	Fiber Coupling Receiver Power_ Max (dBm)	Fiber Coupling Receiver Power_ Min (dBm)	Operation Voltage (V)	Plastic Holder	Trans - mission Speed (Mb/s)	L/F Thicknes (mm)
PLR135/T	11.5x13.6x19.5	-14	-27	2.4~5.5	Yes	16	0.4

UNIT : mm

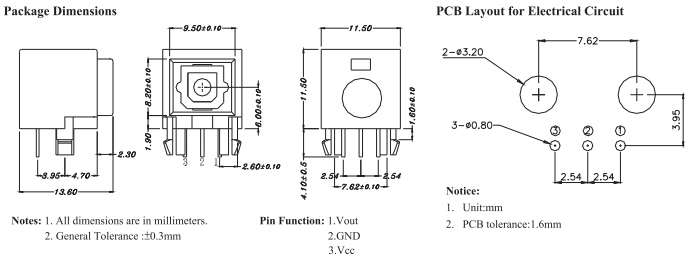

Product	Size (LXWXHmm)	Fiber Coupling Receiver Power_ Max (dBm)	Fiber Coupling Receiver Power_ Min (dBm)	Operation Voltage (V)	Plastic Holder	Trans - mission Speed (Mb/s)	L/F Thicknes (mm)
PLR135/T1	11.5x13.6x11.5	-14	-27	2.4~5.5	Yes	16	0.4

UNIT : mm

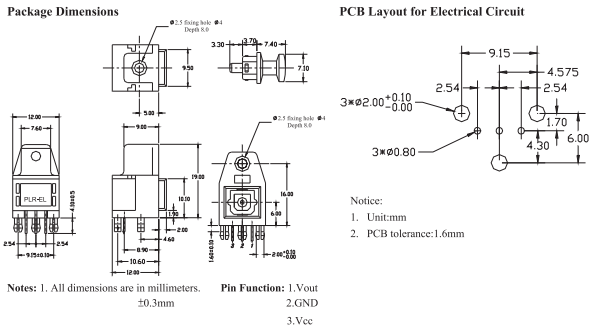

Product	Size (LXWXHmm)	Fiber Coupling Receiver Power_ Max (dBm)	Fiber Coupling Receiver Power_ Min (dBm)	Operation Voltage (V)	Plastic Holder	Trans - mission Speed (Mb/s)	L/F Thicknes (mm)
PLR135/T2	12x14x19	-14	-27	2.4~5.5	Yes	16	0.4

Optic-Fiber Device (Photo Link) ❙ Receiver (PLR) Module

UNIT : mm

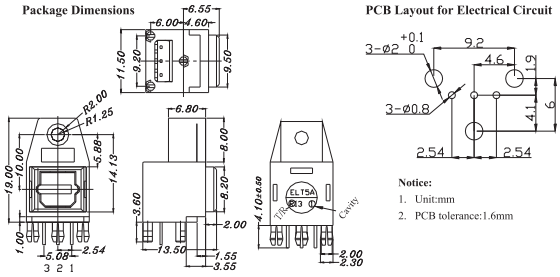

Product	Size (LXWXHmm)	Fiber Coupling Receiver Power_ Max (dBm)	Fiber Coupling Receiver Power_ Min (dBm)	Operation Voltage (V)	Plastic Holder	Trans - mission Speed (Mb/s)	L/F Thicknes (mm)
PLR135/T5A	11.5x13.5x19	-14	-27	2.4~5.5	Yes	16	0.4

UNIT : mm

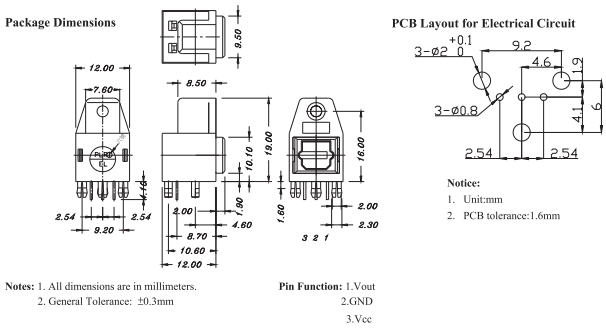

Product	Size (LXWXHmm)	Fiber Coupling Receiver Power_ Max (dBm)	Fiber Coupling Receiver Power_ Min (dBm)	Operation Voltage (V)	Plastic Holder	Trans - mission Speed (Mb/s)	L/F Thicknes (mm)
PLR135/T5P	12x14x19	-14	-27	2.4~5.5	Yes	16	0.4

UNIT : mm

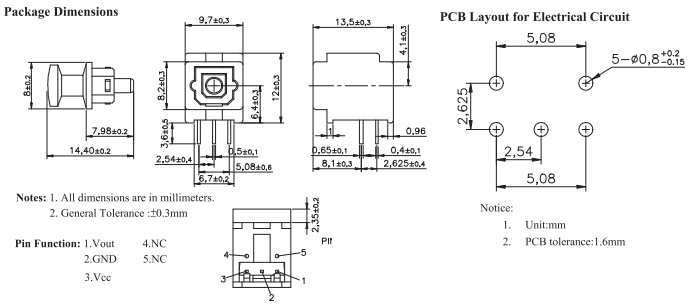

Product	Size (LXWXHmm)	Fiber Coupling Receiver Power_ Max (dBm)	Fiber Coupling Receiver Power_ Min (dBm)	Operation Voltage (V)	Plastic Holder	Trans - mission Speed (Mb/s)	L/F Thicknes (mm)
PLR135/T6	9.7x13.5x12	-14	-27	2.4~5.5	Yes	16	0.4

Optic-Fiber Device (Photo Link) ❙ Receiver (PLR) Module

UNIT : mm

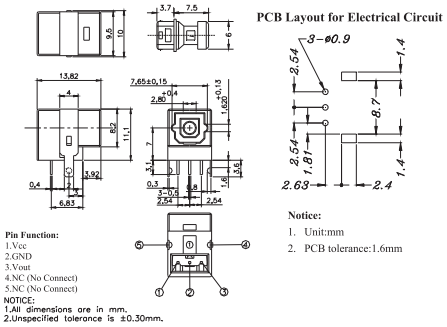

Product	Size (LXWXHmm)	Fiber Coupling Receiver Power_ Max (dBm)	Fiber Coupling Receiver Power_ Min (dBm)	Operation Voltage (V)	Plastic Holder	Trans - mission Speed (Mb/s)	L/F Thicknes (mm)
PLR135/T7	9.9x13.6x11.1	-14	-27	2.4~5.5	Yes	16	0.4

UNIT : mm

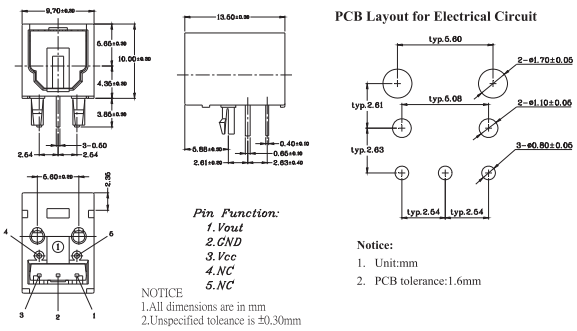

Product	Size (LXWXHmm)	Fiber Coupling Receiver Power_ Max (dBm)	Fiber Coupling Receiver Power_ Min (dBm)	Operation Voltage (V)	Plastic Holder	Trans - mission Speed (Mb/s)	L/F Thicknes (mm)
PLR135/T8	9.7x13.5x10	-14	-27	2.4~5.5	Yes	16	0.4

Optic-Fiber Device (Photo Link) ❙ Receiver (PLR) Module

UNIT : mm

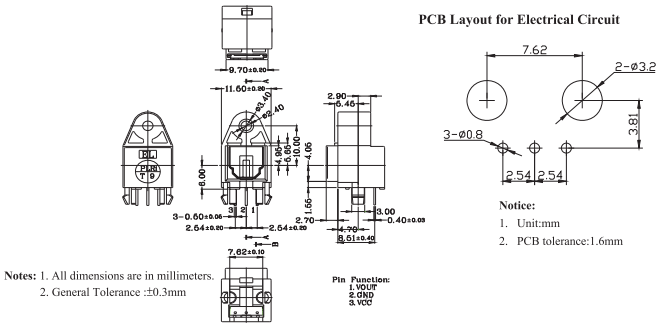

Product	Size (LXWXHmm)	Fiber Coupling Receiver Power_ Max (dBm)	Fiber Coupling Receiver Power_ Min (dBm)	Operation Voltage (V)	Plastic Holder	Trans - mission Speed (Mb/s)	L/F Thicknes (mm)
PLR135/T9	11.5x14x20	-14	-27	2.4~5.5	Yes	16	0.4

UNIT : mm

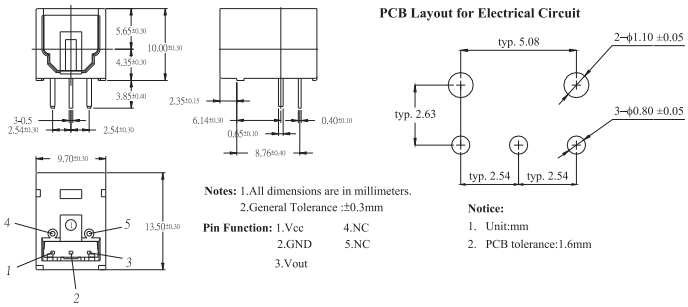

Product	Size (LXWXHmm)	Fiber Coupling Receiver Power_ Max (dBm)	Fiber Coupling Receiver Power_ Min (dBm)	Operation Voltage (V)	Plastic Holder	Trans - mission Speed (Mb/s)	L/F Thicknes (mm)
PLR135/T10	9.7x13.5x10	-14	-27	2.4~5.5	Yes	16	0.4

Optic-Fiber Device (Photo Link) I Transmitter (PLT) Component

UNIT : mm

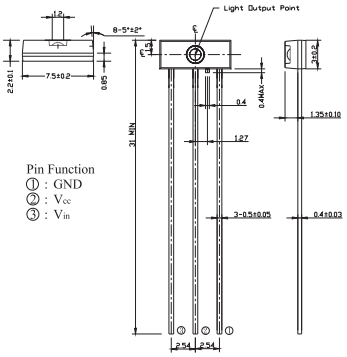

Product	Size (LXWXHmm)	Fiber Coupling Output Power_Max (dBm)	Fiber Coupling Output Power_Min (dBm)	Operation Voltage (V)	Plastic Holder	Trans - mission Speed (Mb/s)	L/F Thicknes (mm)
PLT132	7.5x3.0x2.2	-15	-21	3~5	None	16	0.4

UNIT : mm

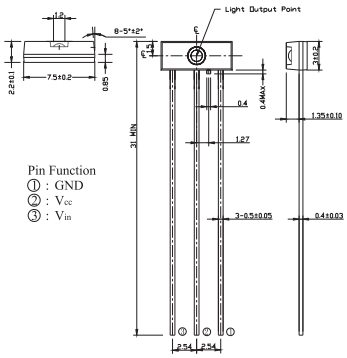

Product	Size (LXWXHmm)	Fiber Coupling Output Power_Max (dBm)	Fiber Coupling Output Power_Min (dBm)	Operation Voltage (V)	Plastic Holder	Trans - mission Speed (Mb/s)	L/F Thicknes (mm)
PLT133	7.5x3.0x2.2	-15	-21	3~5	None	16	0.4

Optic-Fiber Device (Photo Link) I Transmitter (PLT) Component

UNIT : mm

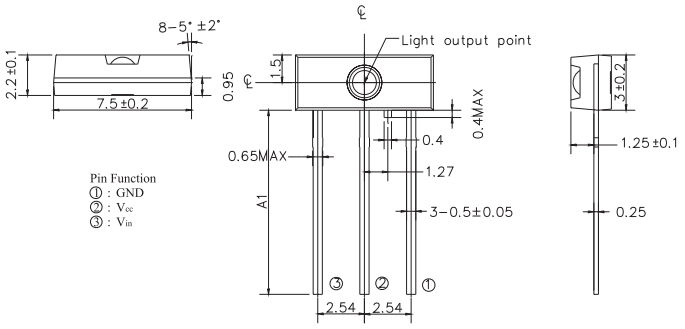

Product	Size (LXWXHmm)	Fiber Coupling Output Power_Max (dBm)	Fiber Coupling Output Power_Min (dBm)	Operation Voltage (V)	Plastic Holder	Trans - mission Speed (Mb/s)	L/F Thicknes (mm)
PLT137	7.5x3.0x2.2	-15	-21	3~5	None	16	0.25

UNIT : mm

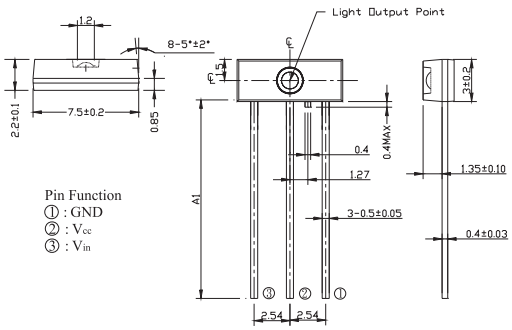

Product	Size (LXWXHmm)	Fiber Coupling Output Power_Max (dBm)	Fiber Coupling Output Power_Min (dBm)	Operation Voltage (V)	Plastic Holder	Trans - mission Speed (Mb/s)	L/F Thicknes (mm)
PLT232/L5	7.5x3.0x2.2	-15	-21	3~5	None	25	0.4

Optic-Fiber Device (Photo Link) ❙ Transmitter (PLT) Module

UNIT : mm

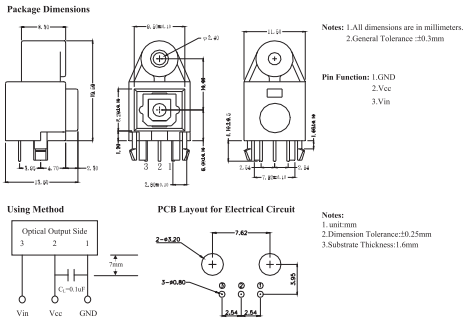

Product	Size (LXWXHmm)	Fiber Coupling Output Power_Max (dBm)	Fiber Coupling Output Power_Min (dBm)	Operation Voltage (V)	Plastic Holder	Trans - mission Speed (Mb/s)	L/F Thicknes (mm)
PLT133/T	11.5x13.6x19.5	-15	-21	3~5	Yes	16	0.4

UNIT : mm

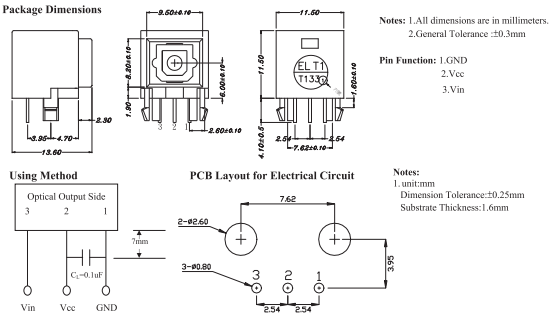

Product	Size (LXWXHmm)	Fiber Coupling Output Power_Max (dBm)	Fiber Coupling Output Power_Min (dBm)	Operation Voltage (V)	Plastic Holder	Trans - mission Speed (Mb/s)	L/F Thicknes (mm)
PLT133/T1	11.5x13.6x11.5	-15	-21	3~5	Yes	16	0.4

UNIT : mm

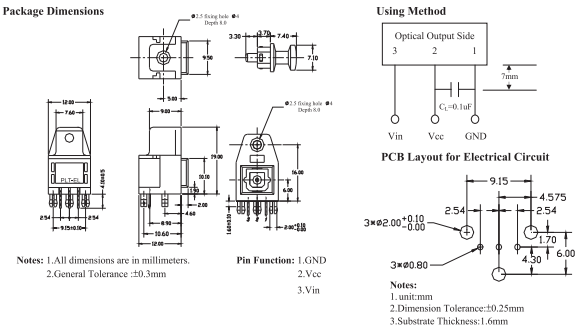

Product	Size (LXWXHmm)	Fiber Coupling Output Power_Max (dBm)	Fiber Coupling Output Power_Min (dBm)	Operation Voltage (V)	Plastic Holder	Trans - mission Speed (Mb/s)	L/F Thicknes (mm)
PLT133/T2	12x14x19	-15	-21	3~5	Yes	16	0.4

Optic-Fiber Device (Photo Link) ❙ Transmitter (PLT) Module

UNIT : mm

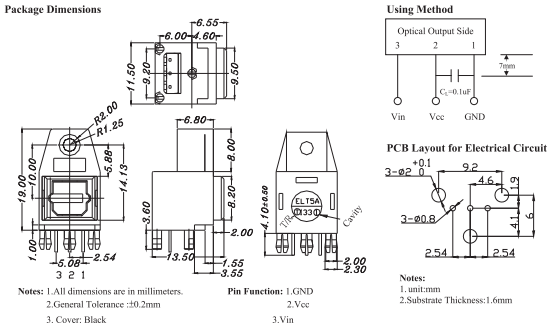

Product	Size (LXWXHmm)	Fiber Coupling Output Power_Max (dBm)	Fiber Coupling Output Power_Min (dBm)	Operation Voltage (V)	Plastic Holder	Trans - mission Speed (Mb/s)	L/F Thicknes (mm)
PLT133/T5A	11.5x13.5x19	-15	-21	3~5	Yes	16	0.4

UNIT : mm

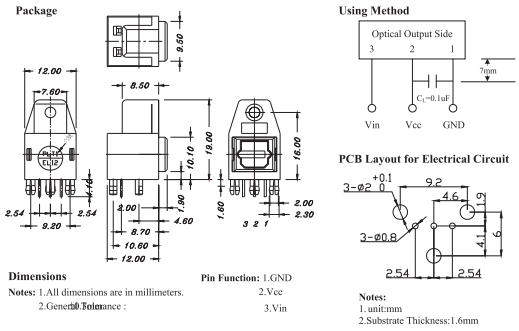

Product	Size (LXWXHmm)	Fiber Coupling Output Power_Max (dBm)	Fiber Coupling Output Power_Min (dBm)	Operation Voltage (V)	Plastic Holder	Trans - mission Speed (Mb/s)	L/F Thicknes (mm)
PLT133/T5P	12x14x19	-15	-21	3~5	Yes	16	0.4

UNIT : mm

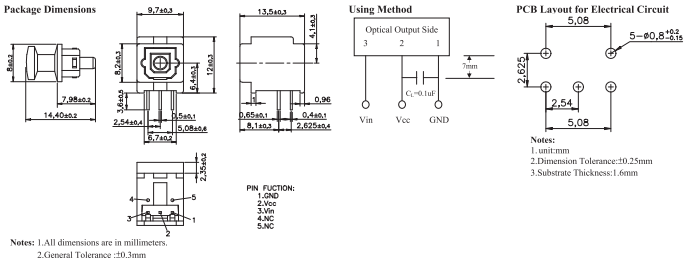

Product	Size (LXWXHmm)	Fiber Coupling Output Power_Max (dBm)	Fiber Coupling Output Power_Min (dBm)	Operation Voltage (V)	Plastic Holder	Trans - mission Speed (Mb/s)	L/F Thicknes (mm)
PLT133/T6	9.7x13.5x12	-15	-21	3~5	Yes	16	0.4

Optic-Fiber Device (Photo Link) ❙ Transmitter (PLT) Module

UNIT : mm

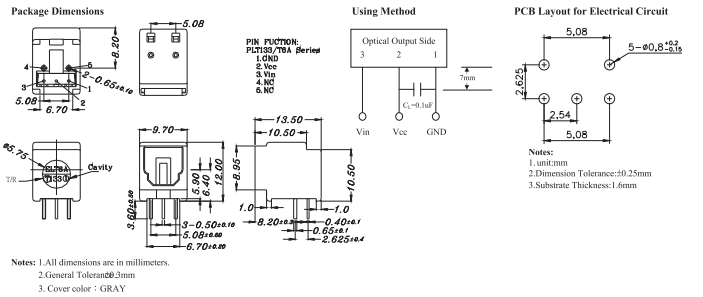

Product	Size (LXWXHmm)	Fiber Coupling Output Power_Max (dBm)	Fiber Coupling Output Power_Min (dBm)	Operation Voltage (V)	Plastic Holder	Trans - mission Speed (Mb/s)	L/F Thicknes (mm)
PLT133/T6A	9.7x13.5x12	-15	-21	3~5	Yes	16	0.4

UNIT : mm

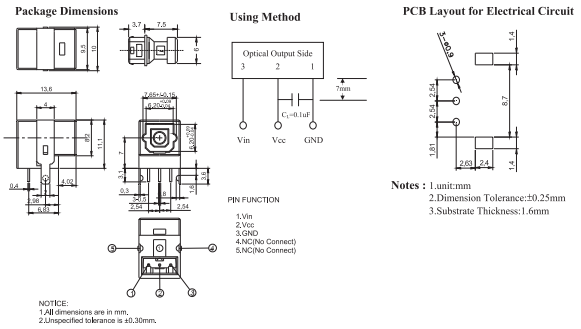

Product	Size (LXWXHmm)	Fiber Coupling Output Power_Max (dBm)	Fiber Coupling Output Power_Min (dBm)	Operation Voltage (V)	Plastic Holder	Trans - mission Speed (Mb/s)	L/F Thicknes (mm)
PLT133/T7	9.2x13.6x11.1	-15	-21	3~5	Yes	16	0.4

UNIT : mm

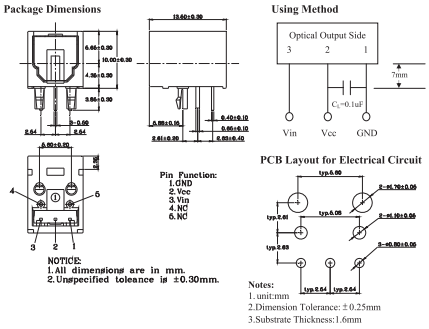

Product	Size (LXWXHmm)	Fiber Coupling Output Power_Max (dBm)	Fiber Coupling Output Power_Min (dBm)	Operation Voltage (V)	Plastic Holder	Trans - mission Speed (Mb/s)	L/F Thicknes (mm)
PLT133/T8	9.7x13.5x10	-15	-21	3~5	Yes	16	0.4

Optic-Fiber Device (Photo Link) ❙ Transmitter (PLT) Module

UNIT : mm

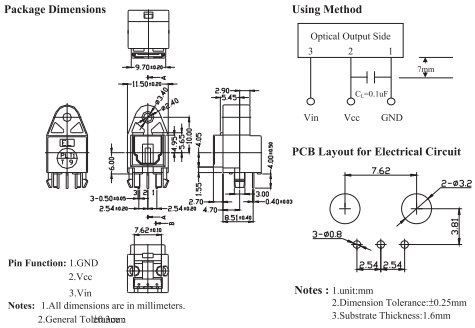

Product	Size (LXWXHmm)	Fiber Coupling Output Power_Max (dBm)	Fiber Coupling Output Power_Min (dBm)	Operation Voltage (V)	Plastic Holder	Trans - mission Speed (Mb/s)	L/F Thicknes (mm)
PLT133/T9	11.5x13.7x20	-15	-21	3~5	Yes	16	0.4

UNIT : mm

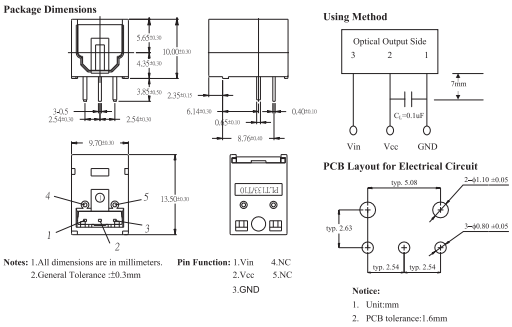

Product	Size (LXWXHmm)	Fiber Coupling Output Power_Max (dBm)	Fiber Coupling Output Power_Min (dBm)	Operation Voltage (V)	Plastic Holder	Trans - mission Speed (Mb/s)	L/F Thicknes (mm)
PLT133/T10W	9.7x13.5x10	-15	-21	3~5	Yes	16	0.4

Optical Sensors I Ambient Light Sensor I Analog

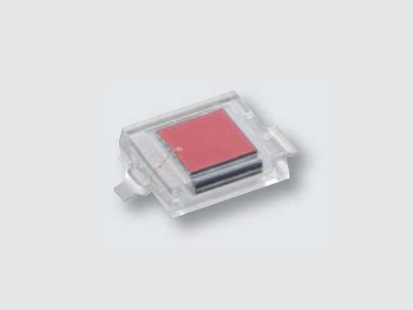

UNIT : mm

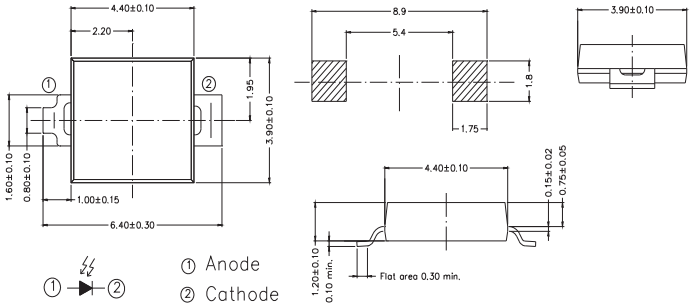

Product	Size (LXWXHmm)	Supply Voltage (V)	Sensitivity λ_P (nm)	Range λ (nm)	Photo current (uA) Ev=100lux	I_D_Max (μA)	Rise / Fall Time (ns)
ALS-PD70-01C/TR7	4.4x3.9x1.2	2.5~5.5	630	390~700	1.1	0.01	--

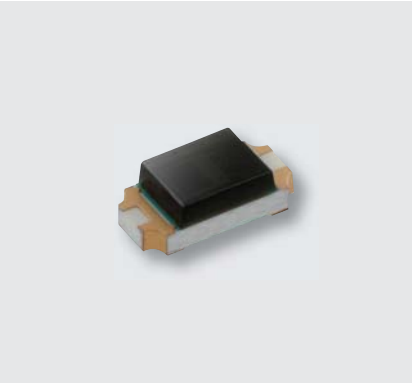

UNIT : mm

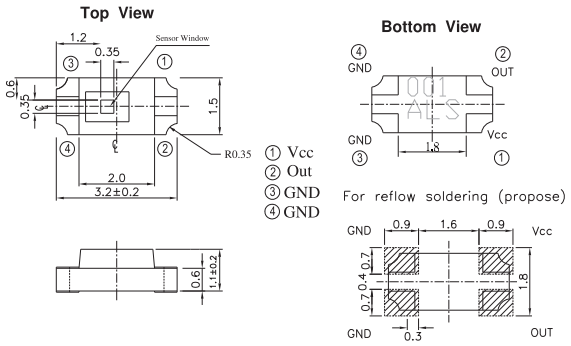

Product	Size (LXWXHmm)	Supply Voltage (V)	Sensitivity λ_P (nm)	Range λ (nm)	Photo current (uA) Ev=100lux	I_D_Max (μA)	Rise / Fall Time (μs)
ALS-PDIC15-21B/TR8	3.2x1.5x1.1	1.5~5.5	580	390~700	17	0.1	100 / 500

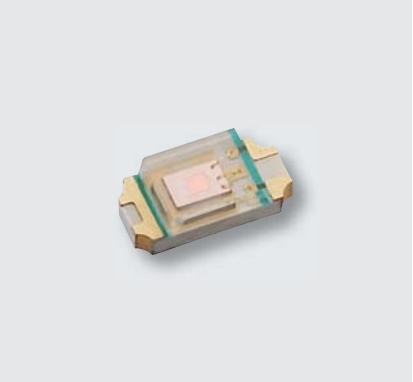

UNIT : mm

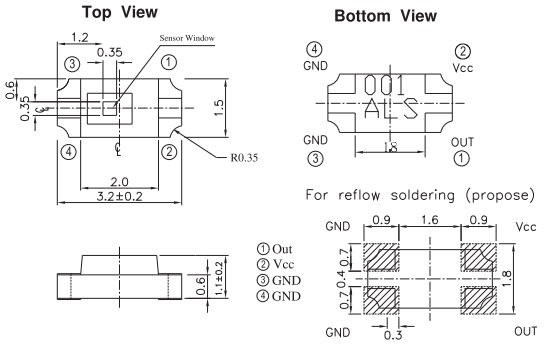

Product	Size (LXWXHmm)	Supply Voltage (V)	Sensitivity λ_P (nm)	Range λ (nm)	Photo current (uA) Ev=100lux	I_D_Max (μA)	Rise / Fall Time (μs)
ALS-PDIC15-21C/L230/TR8	3.2x1.5x1.1	1.8~5.5	590	390~700	59	0.1	359 / 1110

Optical Sensors I Ambient Light Sensor I Analog

UNIT : mm

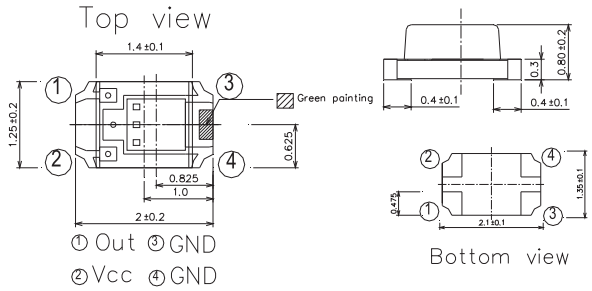

Product	Size (LXWXHmm)	Supply Voltage (V)	Sensitivity λ_P (nm)	Range λ (nm)	Photo current (uA) Ev=100lux	I_D_Max (μA)	Rise / Fall Time (μs)
ALS-PDIC17-55C/TR8	2x1.25x0.8	1.8~5.5	590	390~700	60	0.1	6170 / 9510

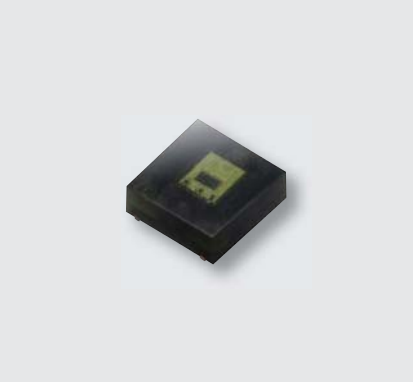

UNIT : mm

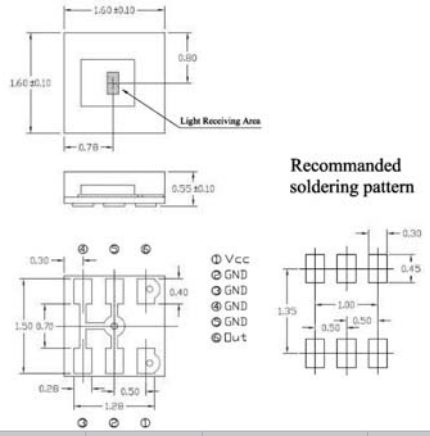

Product	Size (LXWXHmm)	Supply Voltage (V)	Sensitivity λ_P (nm)	Range λ (nm)	Photo current (uA) Ev=100lux	I_D_Max (μA)	Rise / Fall Time (μs)
ALS-PDIC17-77B/TR8	1.6x1.6x0.55	1.8~5.5	600	390~700	40	0.1	11 / 400

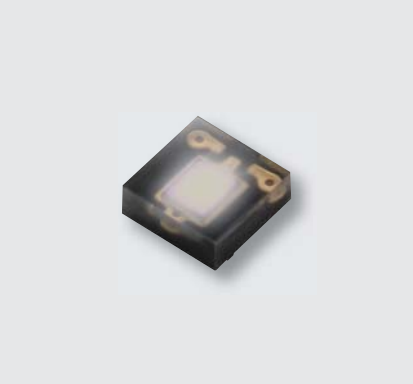

UNIT : mm

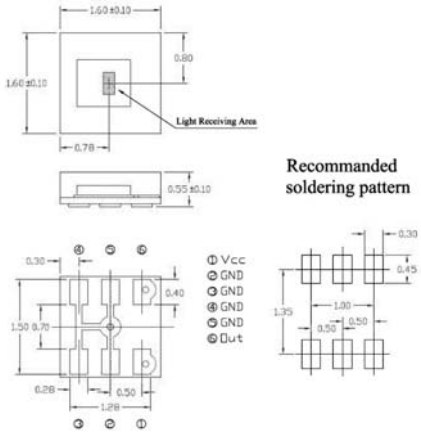

Product	Size (LXWXHmm)	Supply Voltage (V)	Sensitivity λ_P (nm)	Range λ (nm)	Photo current (uA) Ev=100lux	I_D_Max (μA)	Rise / Fall Time (μs)
ALS-PDIC17-77C/TR8	1.6x1.6x0.55	1.8~5.5	600	390~700	40	0.1	11 / 400

Optical Sensors ❙ Ambient Light Sensor ❙ Analog

UNIT : mm

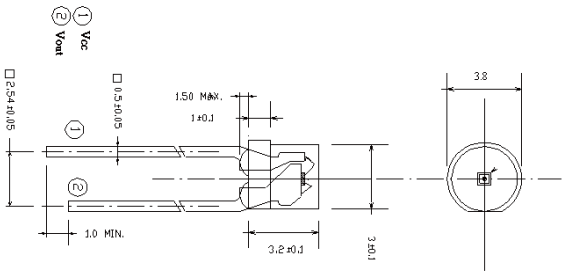

Product	Size (LXWXHmm)	Supply Voltage (V)	Sensitivity λ_P (nm)	Range λ (nm)	Photo current (uA) Ev=100lux	I_D_Max (μA)	Rise / Fall Time (μs)
ALS-PDIC144-6B	3.4x3.0x3.2	1.8~5.5	570	390~700	50	0.1	360 / 1130

UNIT : mm

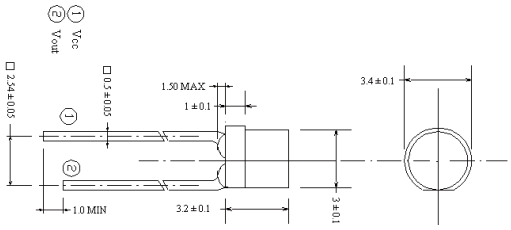

Product	Size (LXWXHmm)	Supply Voltage (V)	Sensitivity λ_P (nm)	Range λ (nm)	Photo current (uA) Ev=100lux	I_D_Max (μA)	Rise / Fall Time (μs)
ALS-PDIC144-6C/L378	3.8x3.5x3.2	1.8~5.5	550	390~700	22	0.1	360 / 1130

UNIT : mm

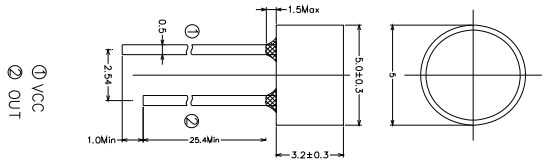

Product	Size (LXWXHmm)	Supply Voltage (V)	Sensitivity λ_P (nm)	Range λ (nm)	Photo current (uA) Ev=100lux	I_D_Max (μA)	Rise / Fall Time (μs)
ALS-PDIC243-3C	5.0x5.0x3.2	2.5~5.5	630	390~700	70	0.1	360 / 1130

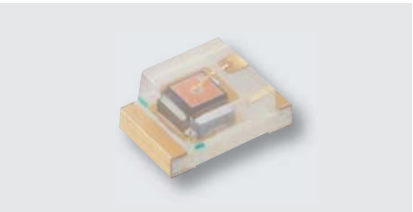

UNIT : mm

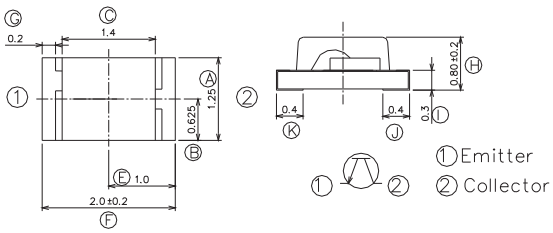

Product	Size (LXWXHmm)	Supply Voltage (V)	Sensitivity λ_P (nm)	Range λ (nm)	Photo current (uA) Ev=100lux	I_D_Max (μA)	Rise / Fall Time (μs)
ALS-PT17-51C/L177/TR8	2x1.25x0.8	2.5~5.5	630	390~700	15	0.1	110 / 220

Optical Sensors ❙ Ambient Light Sensor ❙ Analog

UNIT : mm

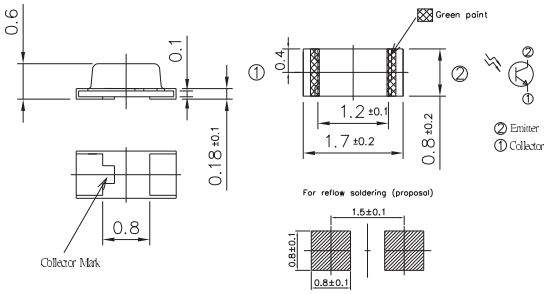

Product	Size (LXWXHmm)	Supply Voltage (V)	Sensitivity λ_P (nm)	Range λ (nm)	Photo current (uA) Ev=100lux	I_D_Max (μA)	Rise / Fall Time (μs)
ALS-PT19-315C/L177/TR8	1.7x0.8x0.6	2.5~5.5	630	390~700	10	0.1	110 / 220

UNIT : mm

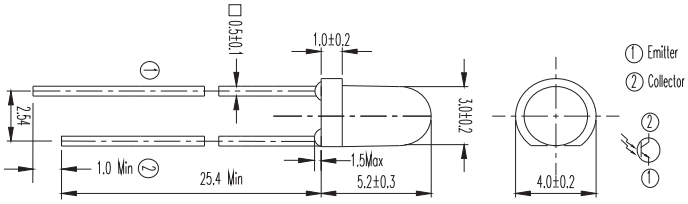

Product	Size (LXWXHmm)	Supply Voltage (V)	Sensitivity λ_P (nm)	Range λ (nm)	Photo current (uA) Ev=100lux	I_D_Max (μA)	Rise / Fall Time (μs)
ALS-PT204-6C/L177	3.0x3.0x5.2	2.5~5.5	630	390~700	200	0.1	110 / 220

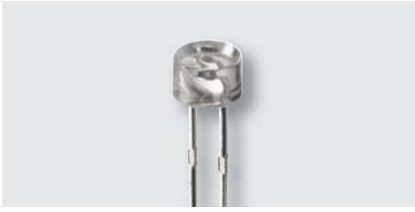

UNIT : mm

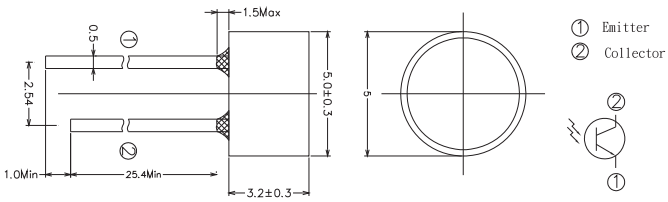

Product	Size (LXWXHmm)	Supply Voltage (V)	Sensitivity λ_P (nm)	Range λ (nm)	Photo current (uA) Ev=100lux	I_D_Max (μA)	Rise / Fall Time (μs)
ALS-PT243-3C/L177	5.0x5.0x3.2	2.5~5.5	630	390~700	70	0.1	110 / 220

Optical Sensors I Ambient Light Sensor I Digital

UNIT : mm

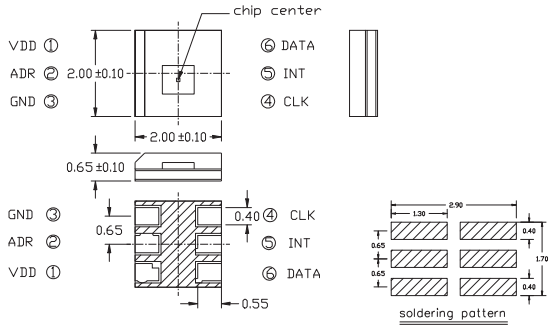

Product	Size (LXWXHmm)	Resloution (bit)	Interface	Peak sensitivity (nm)	Detection range (lux)
ALS-PDIC17-79NB/TR8	2.0x2.0x0.65	15	I^2C	550	110,000

Optical Sensors I Proximity Sensor I Digital

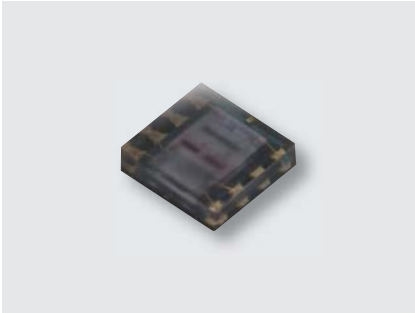

UNIT : mm

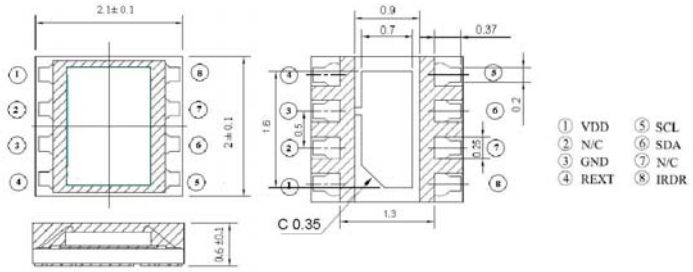

Product	Size (LXWXHmm)	Resloution (bit)	Interface	Ambient Light Detection range (lux)	IR LED Drivering current (mA)
APS-12D-1-02/TR8	2.1 x 2.0 x 0.6	12	I^2C	0.24~64000	6.25 / 12.5 / 25 / 50

Optical Sensors ▌RGB Color Sensor ▌Single Color Sensor (Analog)

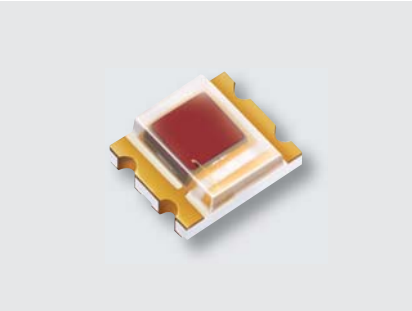

UNIT : mm

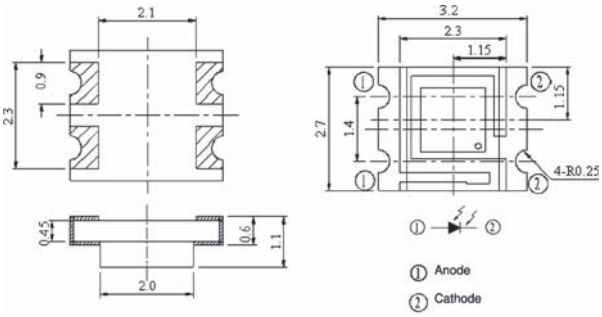

Product	Size (LXWXHmm)	Sensitivity λ_P (nm)	V_F (V)	Rever light current (Ee=100lux) / IL(1) (μA)	Rever light current (Ee=1000lux) IL(2) (μA)
CLS15-22C/L213R/TR8	3.2x2.7x1.1	620	0.5~1.3	0.091	0.83

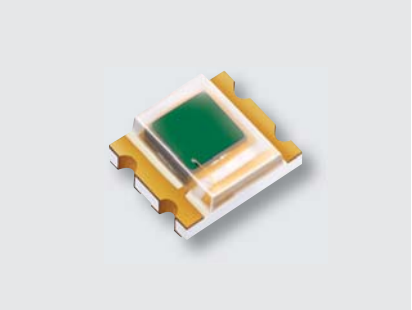

UNIT : mm

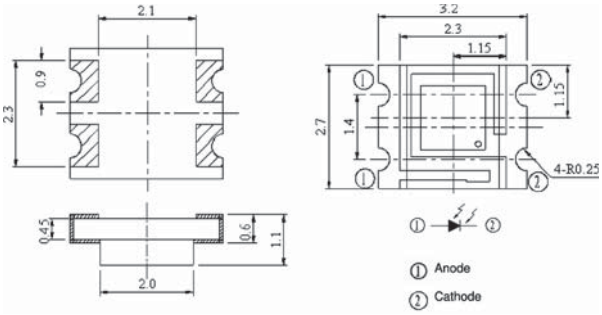

Product	Size (LXWXHmm)	Sensitivity λ_P (nm)	V_F (V)	Rever light current (Ee=100lux) / IL(1) (μA)	Rever light current (Ee=1000lux) IL(2) (μA)
CLS15-22C/L213G/TR8	3.2x2.7x1.1	550	0.5~1.3	0.082	0.72

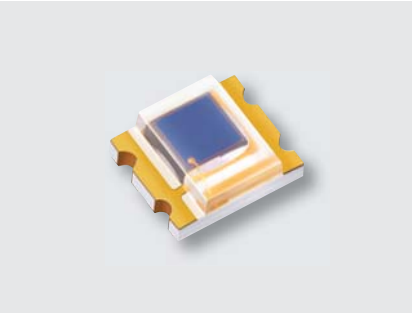

UNIT : mm

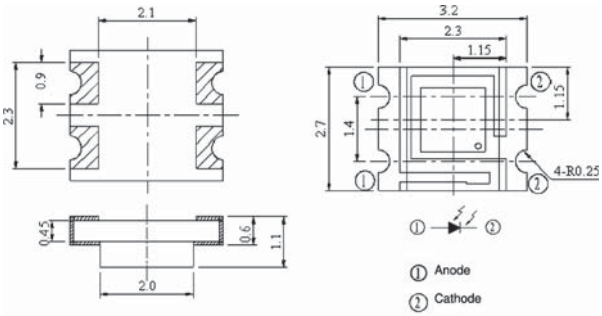

Product	Size (LXWXHmm)	Sensitivity λ_P (nm)	V_F (V)	Rever light current (Ee=100lux) / IL(1) (μA)	Rever light current (Ee=1000lux) IL(2) (μA)
CLS15-22C/L213B/TR8	3.2x2.7x1.1	470	0.5~1.3	0.046	0.39

Optical Sensors ❙ Reflective Sensor

UNIT : mm

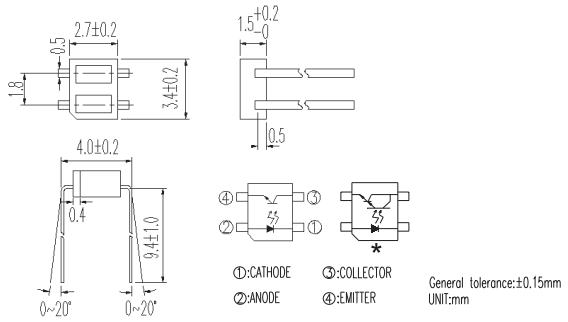

Product	Size (LXWXHmm)	V_F_Typ (V)	V_F_Max (V)	$V_{CE(SAT)}$_Max (V)	$I_{C(ON)}$_Min (mA)	I_{CEO} _Max. (nA)
ITR8307/F43	3.4x2.7x1.5	1.2	1.6	0.4	0.1	100
ITR8307/L24/F43	3.4x2.7x1.5	1.2	1.4	--	0.5	1000

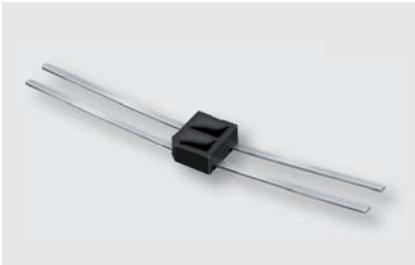

UNIT : mm

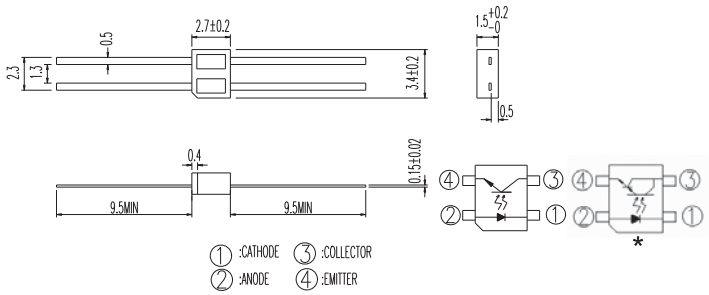

Product	Size (LXWXHmm)	V_F_Typ (V)	V_F_Max (V)	$V_{CE(SAT)}$_Max (V)	$I_{C(ON)}$_Min (mA)	I_{CEO} _Max. (nA)
ITR8307	3.4x2.7x1.5	1.2	1.6	0.4	0.1	100
ITR8307/L24	3.4x2.7x1.5	1.2	1.4	--	0.5	1000

UNIT : mm

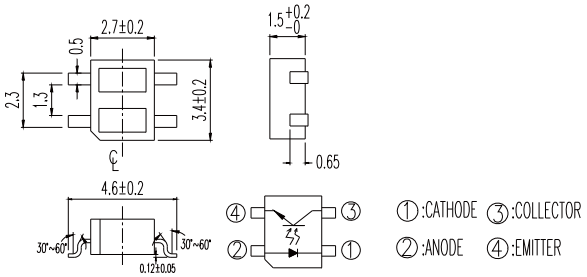

Product	Size (LXWXHmm)	V_F_Typ (V)	V_F_Max (V)	$V_{CE(SAT)}$_Max (V)	$I_{C(ON)}$_Min (mA)	I_{CEO} _Max. (nA)
ITR8307/L24/TR8	3.4x2.7x1.5	1.2	1.4	--	0.5	1000
ITR8307/TR8	3.4x2.7x1.5	1.2	1.6	0.4	0.1	100

Optical Sensors ❙ Reflective Sensor

UNIT : mm

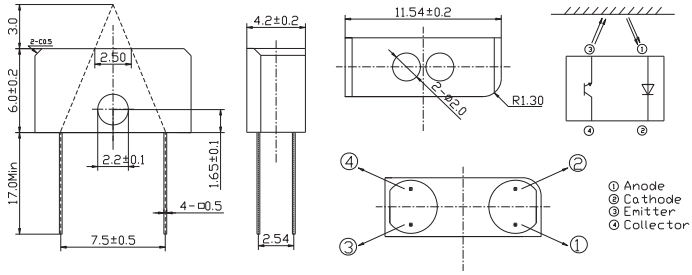

Product	Size (LXWXHmm)	V_F_Typ (V)	V_F_Max (V)	$V_{CE(SAT)}$_Max (V)	$I_{C(ON)}$_Min (mA)	I_{CEO} _Max. (nA)
ITR9904	11.54x4.2x6.0	1.2	1.5	0.4	0.1	100

UNIT : mm

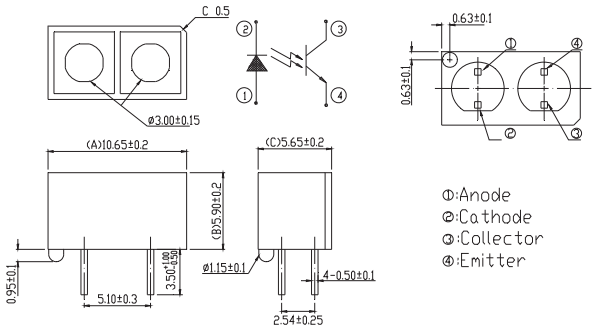

Product	Size (LXWXHmm)	V_F_Typ (V)	V_F_Max (V)	$V_{CE(SAT)}$_Max (V)	$I_{C(ON)}$_Min (mA)	I_{CEO} _Max. (nA)
ITR9908	10.65x5.65x5.9	1.2	1.5	0.4	0.5	100

UNIT : mm

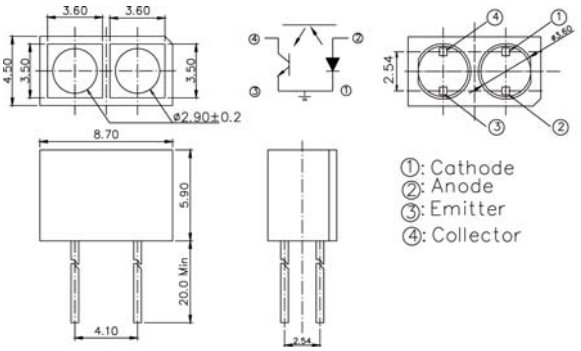

Product	Size (LXWXHmm)	V_F_Typ (V)	V_F_Max (V)	$V_{CE(SAT)}$_Max (V)	$I_{C(ON)}$_Min (mA)	I_{CEO} _Max. (nA)
ITR9909	8.7x4.5x5.9	1.2	1.5	0.4	0.2	100

Optical Sensors ❙ Reflective Sensor

UNIT : mm

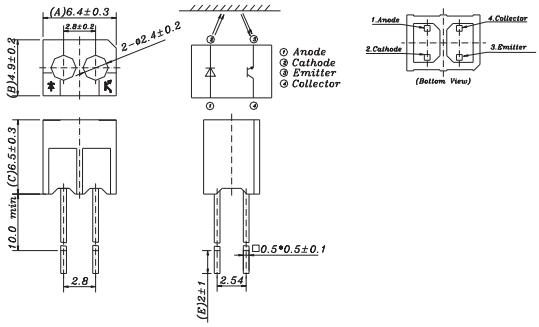

Product	Size (LXWXHmm)	V_F_Typ (V)	V_F_Max (V)	$V_{CE(SAT)}$_Max (V)	$I_{C(ON)}$_Min (mA)	I_{CEO} _Max. (nA)
ITR20001/T	6.4x4.9x6.5	1.2	1.5	0.4	0.2	100

UNIT : mm

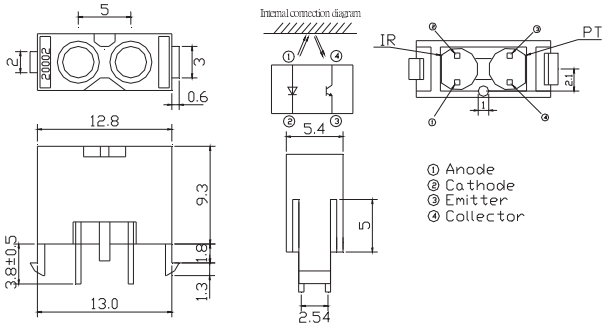

Product	Size (LXWXHmm)	V_F_Typ (V)	V_F_Max (V)	$V_{CE(SAT)}$_Max (V)	$I_{C(ON)}$_Min (mA)	I_{CEO} _Max. (nA)
ITR20002	12.8x5.5x9.3	1.2	1.5	0.4	0.2	100

UNIT : mm

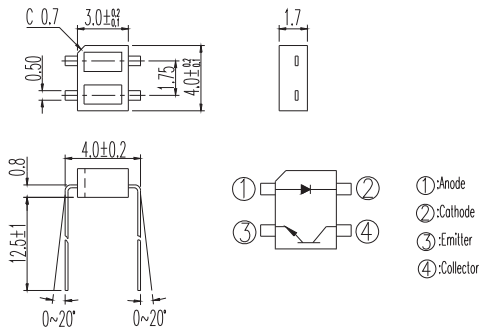

Product	Size (LXWXHmm)	V_F_Typ (V)	V_F_Max (V)	$V_{CE(SAT)}$_Max (V)	$I_{C(ON)}$_Min (mA)	I_{CEO} _Max. (nA)
ITR20004	4.0x3.0x1.7	1.2	1.6	--	0.02	100

Optical Sensors ❙ Reflective Sensor

UNIT : mm

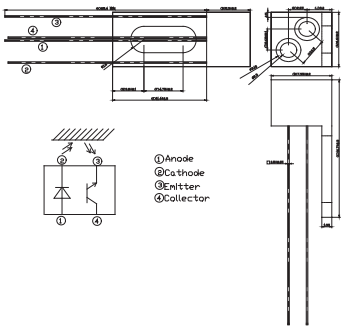

Product	Size (LXWXHmm)	V_F_Typ (V)	V_F_Max (V)	$V_{CE(SAT)}$_Max (V)	$I_{C(ON)}$_Min (mA)	I_{CEO} _Max. (nA)
ITR20501	7.35x6.6x5.3	1.2	1.5	0.4	0.02	100

UNIT : mm

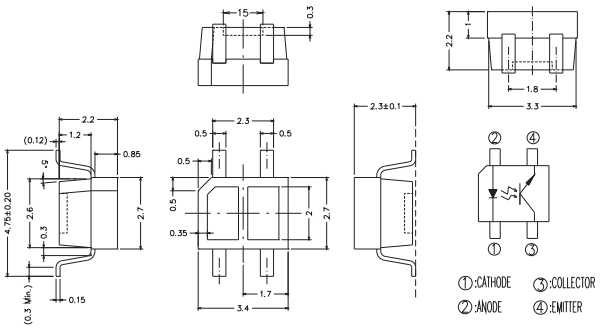

Product	Size (LXWXHmm)	V_F_Typ (V)	V_F_Max (V)	$V_{CE(SAT)}$_Max (V)	$I_{C(ON)}$_Min (mA)	I_{CEO} _Max. (nA)
ITR20510/TR8	3.4x2.7x2.2	1.2	1.6	0.4	0.1	100

UNIT : mm

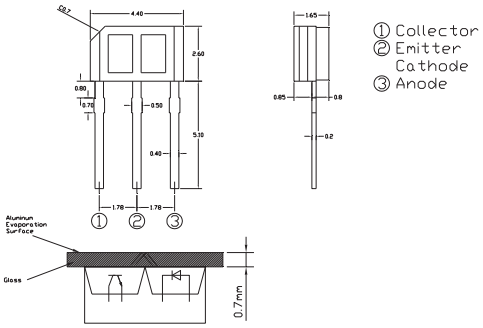

Product	Size (LXWXHmm)	V_F_Typ (V)	V_F_Max (V)	$V_{CE(SAT)}$_Max (V)	$I_{C(ON)}$_Min (mA)	I_{CEO} _Max. (nA)
ITR20904	4.4x2.6x1.65	--	1.4	--	0.05	200

Optical Sensors I Transmissive Sensor

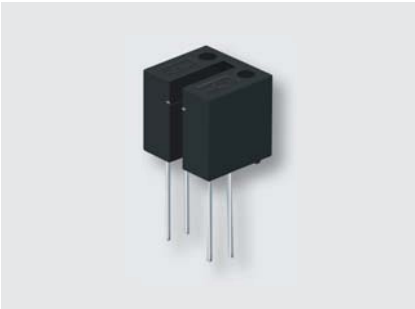

UNIT : mm

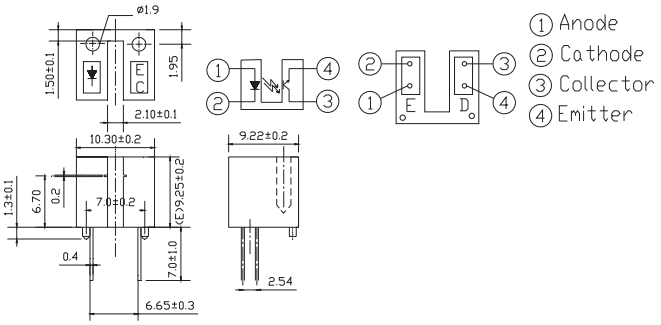

Product	Size (LXWXHmm)	V_F_Typ (V)	V_F_Max (V)	$V_{CE(SAT)}$_Max (V)	$I_{C(ON)}$_Min (mA)	I_{CEO} _Max. (nA)	Gap Distance (mm)
ITR8010	10.3x9.22x9.25	1.2	1.5	0.4	0.9	100	2.1

UNIT : mm

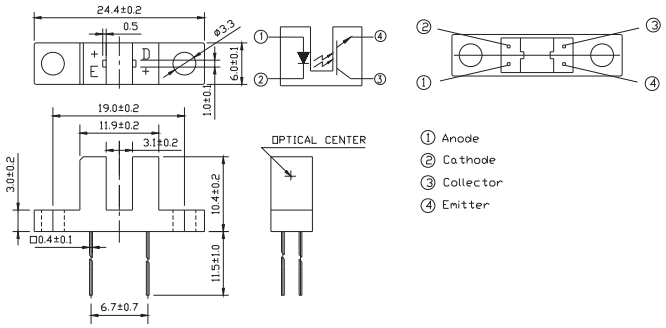

Product	Size (LXWXHmm)	V_F_Typ (V)	V_F_Max (V)	$V_{CE(SAT)}$_Max (V)	$I_{C(ON)}$_Min (mA)	I_{CEO} _Max. (nA)	Gap Distance (mm)
ITR8102	24.4x6.0x10.4	1.2	1.5	0.4	0.9	100	3

UNIT : mm

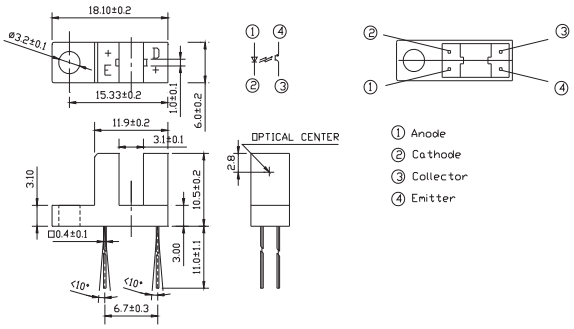

Product	Size (LXWXHmm)	V_F_Typ (V)	V_F_Max (V)	$V_{CE(SAT)}$_Max (V)	$I_{C(ON)}$_Min (mA)	I_{CEO} _Max. (nA)	Gap Distance (mm)
ITR8104	18.1x6.0x10.5	1.2	1.5	0.4	0.5	100	3

Optical Sensors I Transmissive Sensor

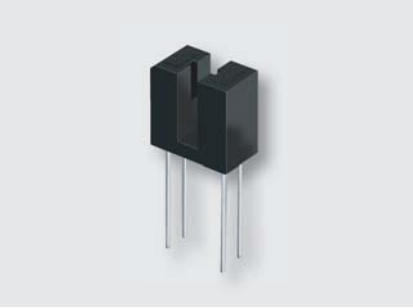

UNIT : mm

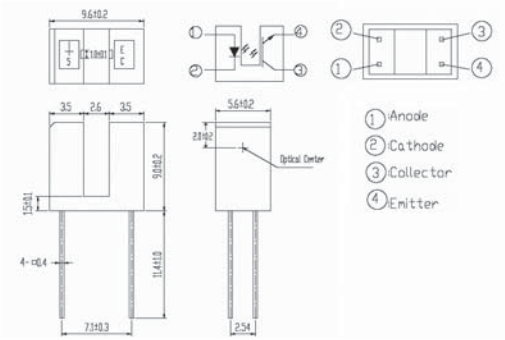

Product	Size (LXWXHmm)	V_F_Typ (V)	V_F_Max (V)	$V_{CE(SAT)}$_Max (V)	$I_{C(ON)}$_Min (mA)	I_{CEO} _Max. (nA)	Gap Distance (mm)
ITR8105	9.6x5.6x9.0	1.2	1.6	0.4	1	100	2.6

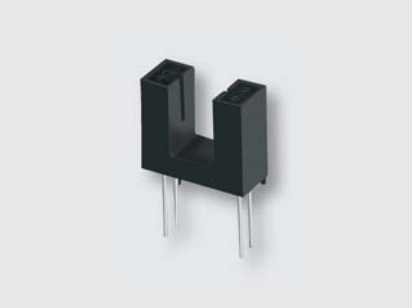

UNIT : mm

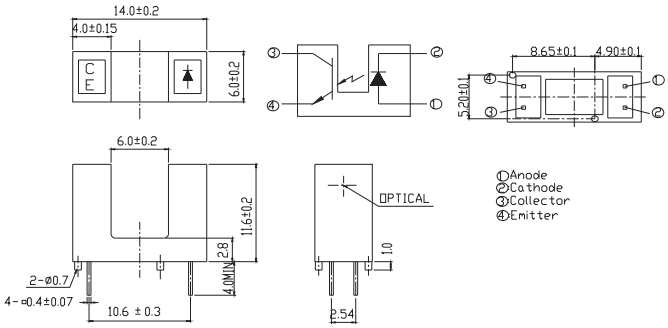

Product	Size (LXWXHmm)	V_F_Typ (V)	V_F_Max (V)	$V_{CE(SAT)}$_Max (V)	$I_{C(ON)}$_Min (mA)	I_{CEO} _Max. (nA)	Gap Distance (mm)
ITR8402-F-A	14.0x6.0x11.6	1.2	1.5	0.4	0.5	100	6

UNIT : mm

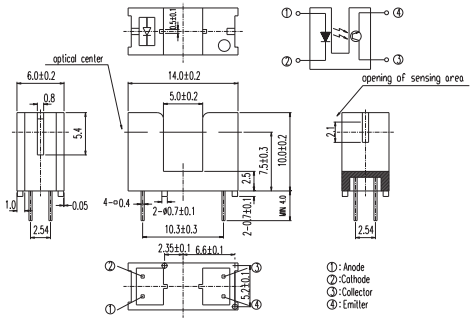

Product	Size (LXWXHmm)	V_F_Typ (V)	V_F_Max (V)	$V_{CE(SAT)}$_Max (V)	$I_{C(ON)}$_Min (mA)	I_{CEO} _Max. (nA)	Gap Distance (mm)
ITR9606-F	14.0x6.0x10.0	1.2	1.5	0.4	0.5	100	5

Optical Sensors I Transmissive Sensor

UNIT : mm

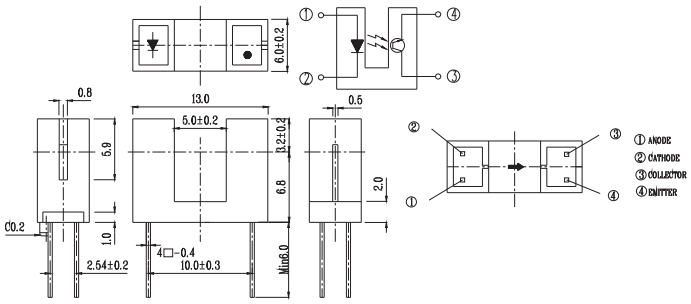

Product	Size (LXWXHmm)	V_F_Typ (V)	V_F_Max (V)	$V_{CE(SAT)}$_Max (V)	$I_{C(ON)}$_Min (mA)	I_{CEO} _Max. (nA)	Gap Distance (mm)
ITR9608-F	13.0x6.0x10.0	1.2	1.5	0.4	0.5	100	5

UNIT : mm

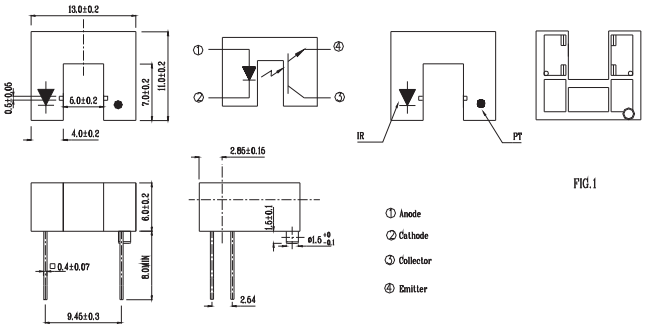

Product	Size (LXWXHmm)	V_F_Typ (V)	V_F_Max (V)	$V_{CE(SAT)}$_Max (V)	$I_{C(ON)}$_Min (mA)	I_{CEO} _Max. (nA)	Gap Distance (mm)
ITR9702-F	13.0x11.0x6.0	1.2	1.5	0.4	0.5	100	4

UNIT : mm

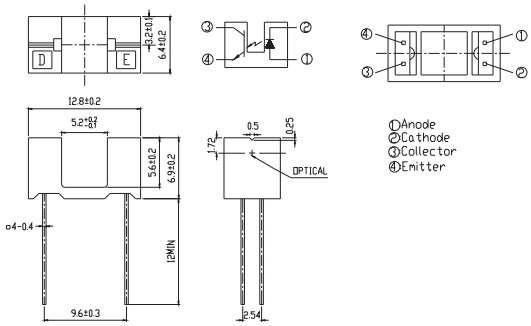

Product	Size (LXWXHmm)	V_F_Typ (V)	V_F_Max (V)	$V_{CE(SAT)}$_Max (V)	$I_{C(ON)}$_Min (mA)	I_{CEO} _Max. (nA)	Gap Distance (mm)
ITR9707	12.8x6.4x6.9	1.2	1.5	0.4	0.5	100	5.2

Optical Sensors I Transmissive Sensor

UNIT : mm

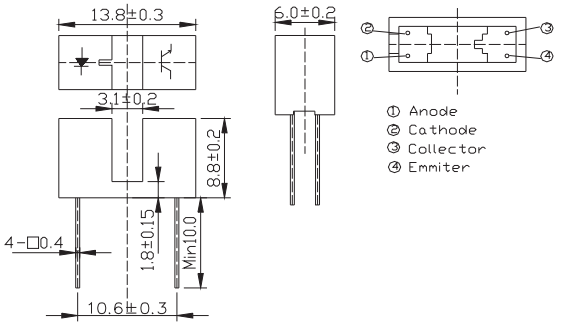

Product	Size (LXWXHmm)	V_F_Typ (V)	V_F_Max (V)	$V_{CE(SAT)}$_Max (V)	$I_{C(ON)}$_Min (mA)	I_{CEO} _Max. (nA)	Gap Distance (mm)
ITR9803	13.8x6.0x8.8	1.2	1.6	0.4	0.5	100	3.1

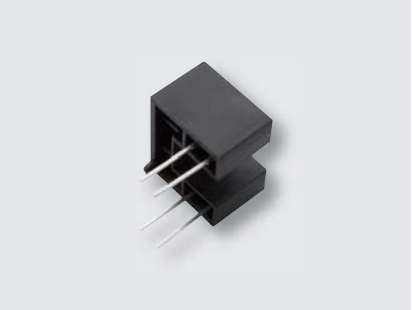

UNIT : mm

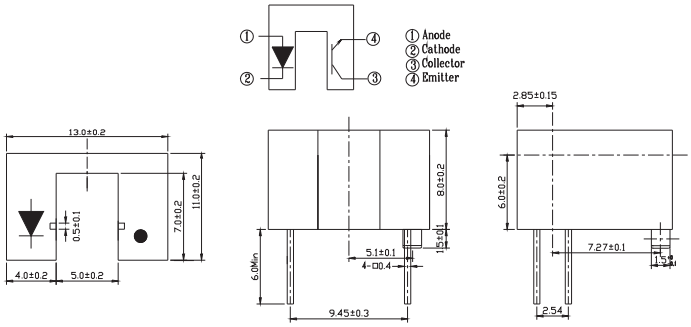

Product	Size (LXWXHmm)	V_F_Typ (V)	V_F_Max (V)	$V_{CE(SAT)}$_Max (V)	$I_{C(ON)}$_Min (mA)	I_{CEO} _Max. (nA)	Gap Distance (mm)
ITR9809-F/T	11.54x4.2x6.0	1.2	1.5	0.4	1	100	5

UNIT : mm

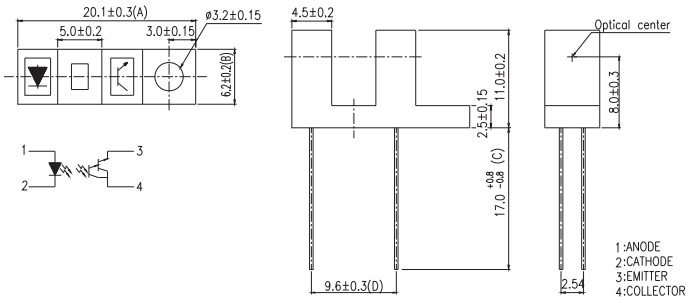

Product	Size (LXWXHmm)	V_F_Typ (V)	V_F_Max (V)	$V_{CE(SAT)}$_Max (V)	$I_{C(ON)}$_Min (mA)	I_{CEO} _Max. (nA)	Gap Distance (mm)
ITR9813	20.1x6.2x11.0	1.2	1.5	0.4	0.5	100	5

Optical Sensors I Transmissive Sensor

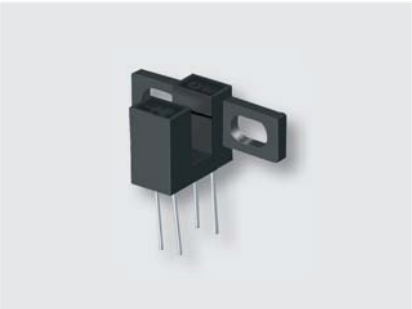

UNIT : mm

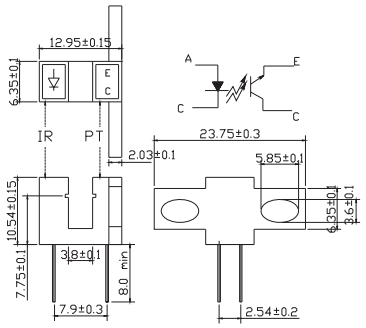

Product	Size (LXWXHmm)	V_F_Typ (V)	V_F_Max (V)	$V_{CE(SAT)}$_Max (V)	$I_{C(ON)}$_Min (mA)	I_{CEO} _Max. (nA)	Gap Distance (mm)
ITR20005-F	23.7x6.3x10.5	1.2	1.5	0.4	0.6	100	3.8

UNIT : mm

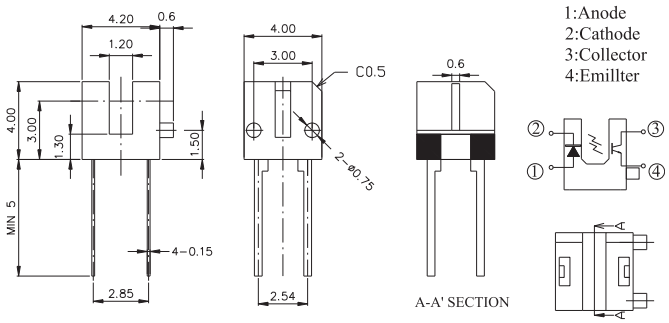

Product	Size (LXWXHmm)	V_F_Typ (V)	V_F_Max (V)	$V_{CE(SAT)}$_Max (V)	$I_{C(ON)}$_Min (mA)	I_{CEO} _Max. (nA)	Gap Distance (mm)
ITR20402	4.2x4.0x4.0	1.2	1.6	0.4	0.3	100	1.2

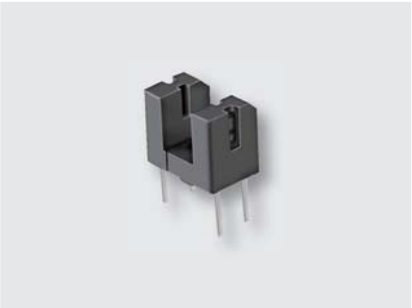

UNIT : mm

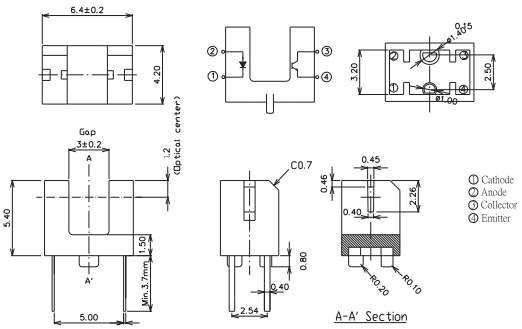

Product	Size (LXWXHmm)	V_F_Typ (V)	V_F_Max (V)	$V_{CE(SAT)}$_Max (V)	$I_{C(ON)}$_Min (mA)	I_{CEO} _Max. (nA)	Gap Distance (mm)
ITR20403	6.4x4.2x5.4	1.2	1.6	0.4	0.2	100	3

Photo Coupler ❙ Darlington Transistor ❙ 4Pin DIP-DC

UNIT : mm

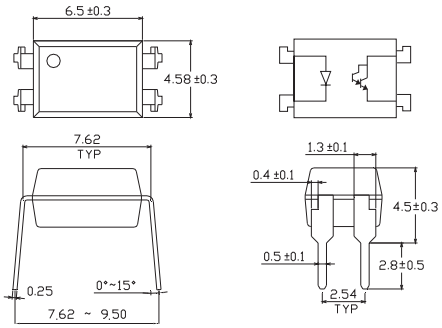

Product	Size (LXWXHmm)	V_F_Typ (V)	Rise / Fall Time (μs)	BV_{CEO}_Min (V)	CTR (%)	Viso (V_{rms})	$V_{CE(SAT)}$_Max (V)
EL815	6.5x4.58x3.5	1.2	60.0 / 53.0	35	600~7500	5000	1

Photo Coupler ❙ Darlington Transistor ❙ 6Pin DIP-DC

UNIT : mm

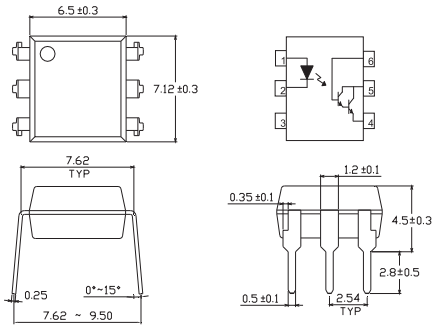

Product	Size (LXWXHmm)	V_F_Typ (V)	Rise / Fall Time (μs)	BV_{CEO} _ Min (V)	CTR (%)	Viso (V_{rms})	$V_{CE(SAT)}$_Max (V)
4N29	7.12x6.5x3.5	1.2	5.0 / 40.0	55	100 min.	5000	1
4N30	7.12x6.5x3.5	1.2	5.0 / 40.0	55	100 min.	5000	1
4N31	7.12x6.5x3.5	1.2	5.0 / 40.0	55	50 min.	5000	1.2
4N32	7.12x6.5x3.5	1.2	5.0 / 100.0	55	500 min.	5000	1
4N33	7.12x6.5x3.5	1.2	5.0 / 100.0	55	500 min.	5000	1
H11B1	7.12x6.5x3.5	1.2	25 / 18	55	500 min.	5000	1
H11B2	7.12x6.5x3.5	1.2	25 /18	55	200 min.	5000	1
H11B3	7.12x6.5x3.5	1.2	25 / 18	55	100 min.	5000	1
H11B255	7.12x6.5x3.5	1.2	25 / 18	55	100 min.	5000	1
TIL113	7.12x6.5x3.5	1.2	5 / 100	55	300 min.	5000	1.2

Photo Coupler ❙ Darlington Transistor ❙ 8Pin DIP-DC

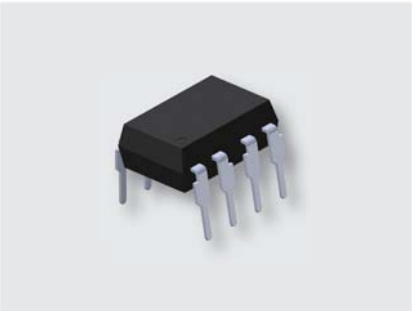

UNIT : mm

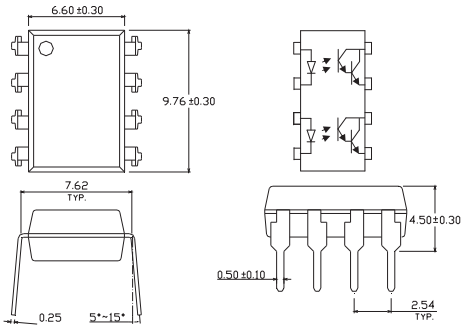

Product	Size (LXWXHmm)	V_F_Typ (V)	Rise / Fall Time (μs)	BV_{CEO}_Min (V)	CTR (%)	Viso (V_{rms})	$V_{CE(SAT)}$_Max (V)
EL825	9.76x6.6x3.5	1.2	60 / 53	40	600~7500	5000	1

Photo Coupler ❙ High Speed ❙ 8Pin SOP

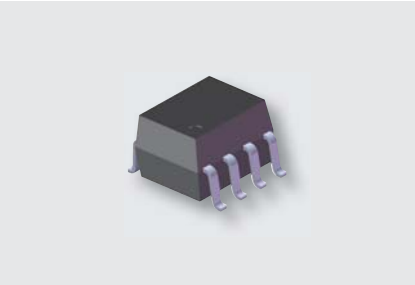

UNIT : mm

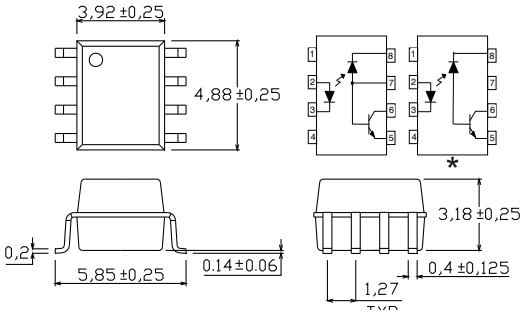

Product	Size (LXWXHmm)	tPHL / tPLH (ns)	Supply Voltage (V)	CTR (%)	Viso (V_{rms})	CMR (V/us)	I_O (mA)
*EL0452	4.88x3.92x3.18	1000 / 1000	30 max	19-50	3750	1000	16 max
EL0500	4.88x3.92x3.18	2000 / 2000	30 max	7-50	3750	1000	16 max
EL0501	4.88x3.92x3.18	1000 / 1000	30 max	19-50	3750	1000	16 max

Star mark * : Please refer to the schematic of Pin configuration with " * " mark

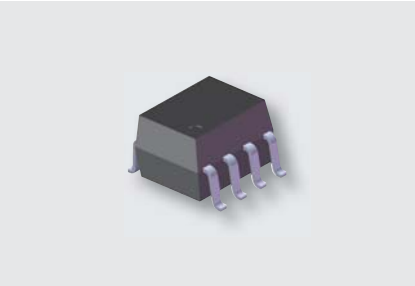

UNIT : mm

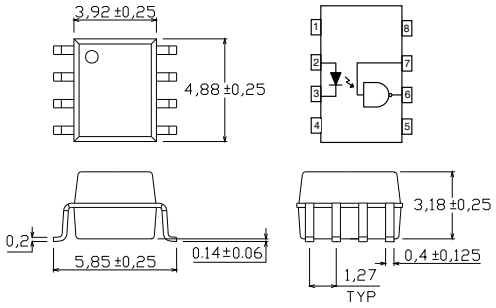

Product	Size (LXWXHmm)	tPHL / tPLH (ns)	Supply Voltage (V)	CTR (%)	Viso (V_{rms})	CMR (V/us)	I_O (mA)
EL0600	4.88x3.92x3.18	75 / 75	7 max	--	3750	--	50 max
EL0601	4.88x3.92x3.18	75 / 75	7 max	--	3750	5000	50 max

Photo Coupler I High Speed I 8Pin DIP

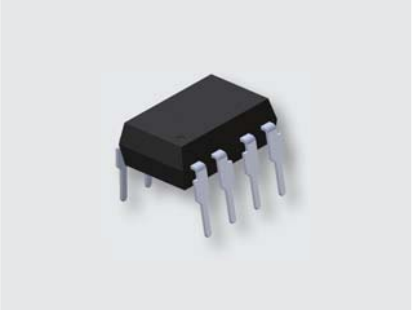

UNIT : mm

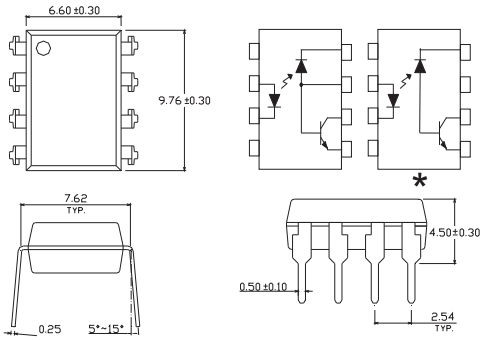

Product	Size (LXWXHmm)	tPHL / tPLH (ns)	Supply Voltage (V)	CTR (%)	Viso (V_{rms})	CMR (V/us)	I_O (mA)
6N135	9.76x6.60x3.50	2000 / 2000	30 max.	7~50	5000	1000	8 max.
6N136	9.76x6.60x3.50	1000 / 1000	30 max.	19~50	5000	1000	8 max.
*EL4502	9.76x6.60x3.50	1000 / 1000	30 max.	15 min	5000	1000	8 max.

Star mark * : Please refer to the schematic of Pin configuration with " * " mark

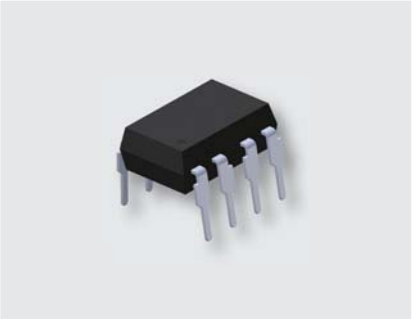

UNIT : mm

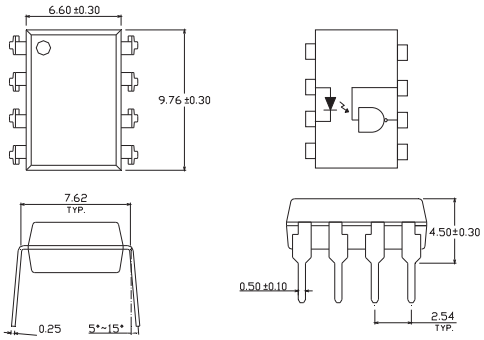

Product	Size (LXWXHmm)	tPHL / tPLH (ns)	Supply Voltage (V)	CTR (%)	Viso (V_{rms})	CMR (V/us)	I_O (mA)
6N137	9.76x6.60x3.50	75 / 75	7 max.	--	5000	1000	50 max.

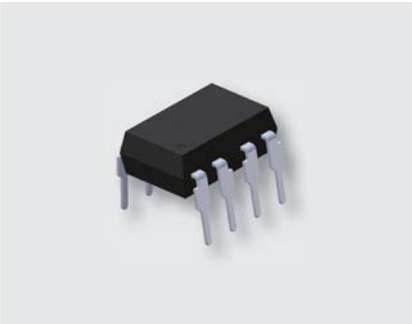

UNIT : mm

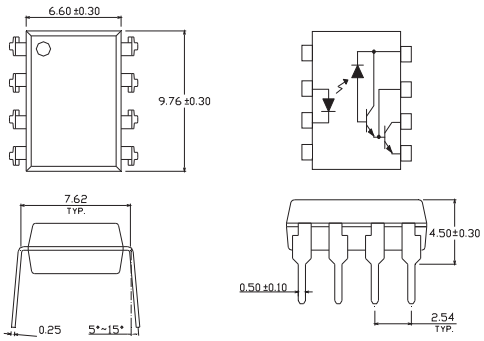

Product	Size (LXWXHmm)	tPHL / tPLH (ns)	Supply Voltage (V)	CTR (%)	Viso (V_{rms})	CMR (V/us)	I_O (mA)
6N138	9.76x6.60x3.50	15000 / 50000	7 max.	300 min.	5000	1000	60 max.
6N139	9.76x6.60x3.50	30000 / 90000	18 max.	500 min.	5000	1000	60 max.

Photo Coupler ❙ Schmitt Trigger ❙ 6Pin DIP

UNIT : mm

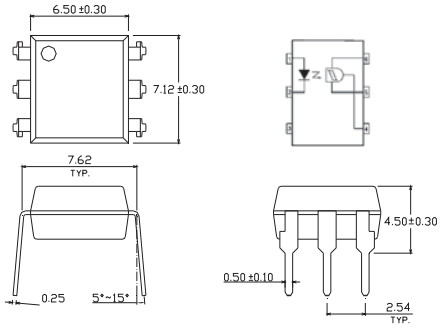

Product	Size (LXWXHmm)	Rise / Fall Time (μs)	Supply Voltage (V)	Viso (V_{rms})	I_{FT} (mA)	I_{CC}_Max (mA)	I_O (mA)
H11L1	7.12x6.5x3.5	0.1 / 0.1	3~15	5000	1.6	5	0.1

Photo Coupler ❙ Transistor ❙ 4Pin DIP-AC

UNIT : mm

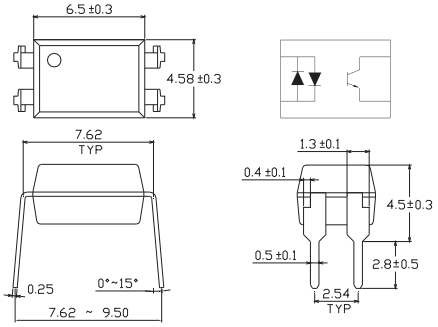

Product	Size (LXWXHmm)	V_F_Typ (V)	Rise / Fall Time (μs)	BV_{CEO}_Min (V)	CTR (%)	Viso (V_{rms})	$V_{CE(SAT)}$_Max (V)
EL814	6.5x4.58x3.5	1.2	7.0 / 11.0	80	20~300	5000	0.4

Photo Coupler ❙ Transistor ❙ 4Pin DIP-DC

UNIT : mm

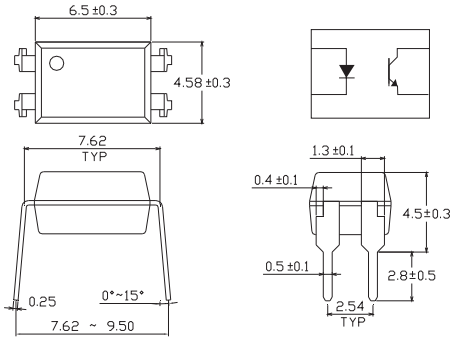

Product	Size (LXWXHmm)	V_F_Typ (V)	Rise / Fall Time (μs)	BV_{CEO}_Min (V)	CTR (%)	Viso (V_{rms})	$V_{CE(SAT)}$_Max (V)
EL816	6.5x4.58x3.5	1.2	4.0 / 3.0	80	50~600	5000	0.4
EL817	6.5x4.58x3.5	1.2	3.0 / 4.0	35	50~600	5000	0.4
EL817-G	6.5x4.58x3.5	1.2	3.0 / 4.0	80	50~600	5000	0.4

Photo Coupler ❙ Transistor ❙ 4Pin High Isolation

UNIT : mm

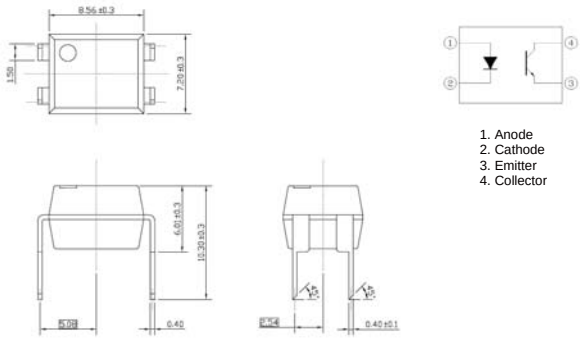

Product	Size (LXWXHmm)	V_F_Typ (V)	Rise / Fall Time (μs)	BV_{CEO}_Min (V)	CTR (%)	Viso (V_{rms})	$V_{CE(SAT)}$_Max (V)
CNY64	8.56x7.20x6.01	1.6	3.0 / 5.0	80	50~300	8200	0.3

UNIT : mm

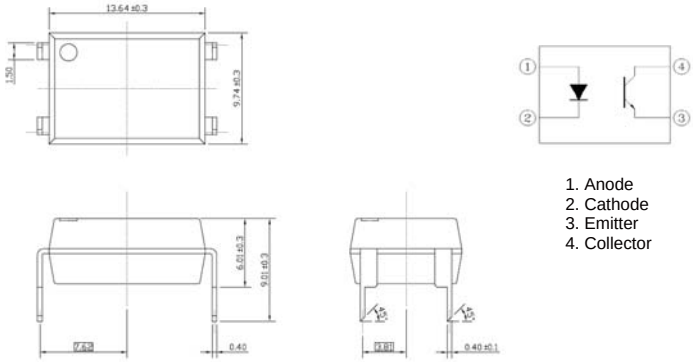

Product	Size (LXWXHmm)	V_F_Typ (V)	Rise / Fall Time (μs)	BV_{CEO}_Min (V)	CTR (%)	Viso (V_{rms})	$V_{CE(SAT)}$_Max (V)
CNY65	13.64x9.74x6.01	1.6	3.0 / 5.0	80	50~300	8200	0.3

Photo Coupler ❙ Transistor ❙ 4Pin SOP-AC

UNIT : mm

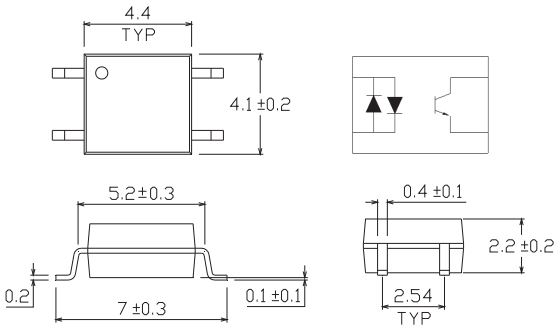

Product	Size (LXWXHmm)	V_F_Typ (V)	Rise / Fall Time (μs)	BV_{CEO}_ Min (V)	CTR (%)	Viso (V_{rms})	$V_{CE(SAT)}$_Max (V)
EL354	4.4x4.1x2.2	1.2	6.0/8.0	80	20~300	3750	0.4

Photo Coupler ❙ Transistor ❙ 4Pin SOP-DC

UNIT : mm

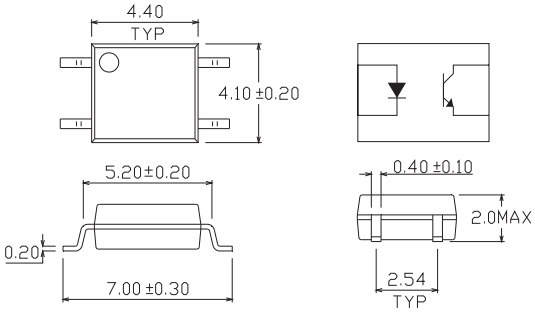

Product	Size (LXWXHmm)	V_F_Typ (V)	Rise / Fall Time (μs)	BV_{CEO}_ Min (V)	CTR (%)	Viso (V_{rms})	$V_{CE(SAT)}$_Max (V)
EL357N-G	4.4x4.1x2.0	1.2	3.0/4.0	80	50~600	3750	0.4

Photo Coupler ❙ Transistor ❙ 4Pin SSOP-DC

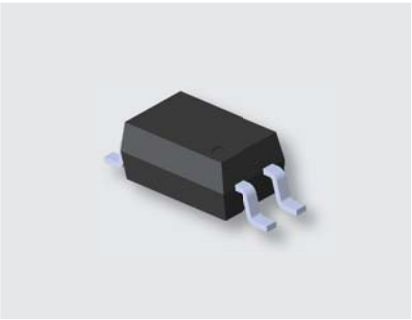

UNIT : mm

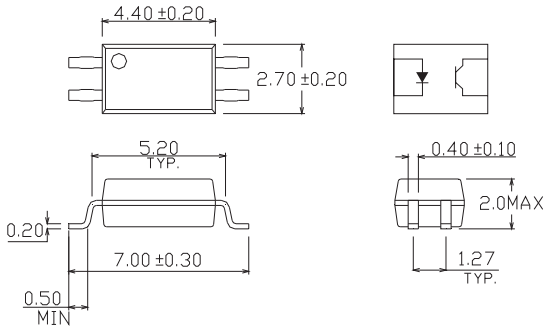

Product	Size (LXWXHmm)	V_F_Typ (V)	Rise / Fall Time (μs)	BV_{CEO}_ Min (V)	CTR (%)	Viso (V_{rms})	$V_{CE(SAT)}$_Max (V)
EL3H7-G	4.4x2.7x2.0	1.2	5.0/3.0	80	50~600	3750	0.4

Photo Coupler ❙ Transistor ❙ 4Pin / 5Pin Long Creepage

UNIT : mm

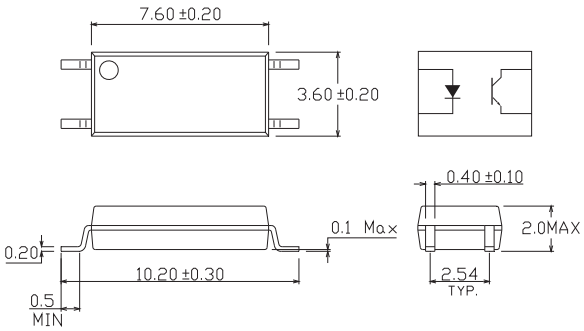

Product	Size (LXWXHmm)	V_F_Typ (V)	Rise / Fall Time (μs)	BV_{CEO}_Min (V)	CTR (%)	Viso (V_{rms})	$V_{CE(SAT)}$_Max (V)
EL1010-G	7.6x3.6x2.0	1.45	2 / 3	80	50~600	5000	0.3
EL1012-G	7.6x3.6x2.0	1.45	2 / 3	80	63~125	5000	0.3
EL1013-G	7.6x3.6x2.0	1.45	2 / 3	80	100~200	5000	0.3
EL1014-G	7.6x3.6x2.0	1.45	2 / 3	80	160~320	5000	0.3
EL1017-G	7.6x3.6x2.0	1.45	2 / 3	80	80~160	5000	0.3
EL1018-G	7.6x3.6x2.0	1.45	2 / 3	80	130~260	5000	0.3
EL1019-G	7.6x3.6x2.0	1.45	2 / 3	80	200~400	5000	0.3

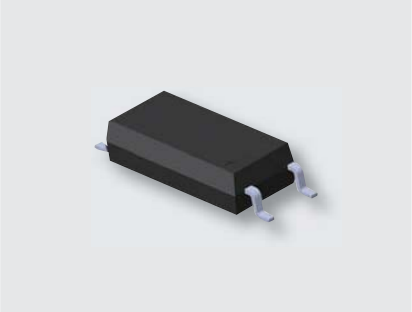

UNIT : mm

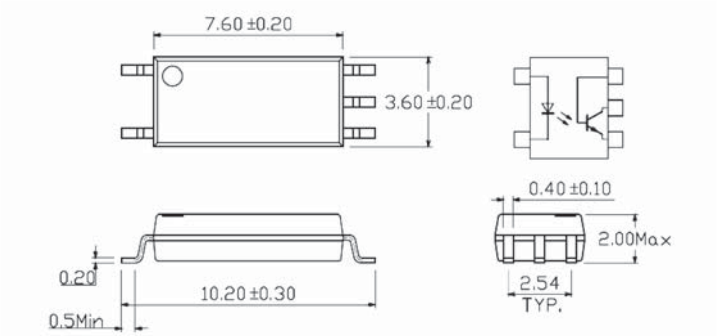

Product	Size (LXWXHmm)	V_F_Typ (V)	Rise / Fall Time (μs)	BV_{CEO}_Min (V)	CTR (%)	Viso (V_{rms})	$V_{CE(SAT)}$_Max (V)
EL1110-G	7.6x3.6x2.0	1.45	2 / 3	80	50~600	5000	0.3
EL1112-G	7.6x3.6x2.0	1.45	2 / 3	80	63~125	5000	0.3
EL1113-G	7.6x3.6x2.0	1.45	2 / 3	80	100~200	5000	0.3
EL1114-G	7.6x3.6x2.0	1.45	2 / 3	80	160~320	5000	0.3
EL1116-G	7.6x3.6x2.0	1.45	2 / 3	80	100~300	5000	0.3
EL1117-G	7.6x3.6x2.0	1.45	2 / 3	80	80~160	5000	0.3
EL1118-G	7.6x3.6x2.0	1.45	2 / 3	80	130~260	5000	0.3
EL1119-G	7.6x3.6x2.0	1.45	2 / 3	80	200~400	5000	0.3

Photo Coupler ❙ Transistor ❙ 6Pin DIP-DC

UNIT : mm

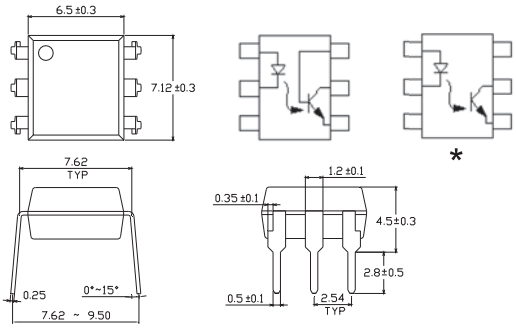

Product	Size (LXWXHmm)	V_F_Typ (V)	Rise / Fall Time (μs)	BV_{CEO} – Min (V)	CTR (%)	Viso (V_{rms})	$V_{CE(SAT)}$_Max (V)
4N25	7.12x6.5x3.5	1.2	3.0/3.0	80	20 min.	5000	0.4
4N26	7.12x6.5x3.5	1.2	3.0/3.0	80	20 min.	5000	0.4
4N27	7.12x6.5x3.5	1.2	3.0/3.0	80	10 min.	5000	0.4
4N28	7.12x6.5x3.5	1.2	3.0/3.0	80	10 min.	5000	0.4
4N35	7.12x6.5x3.5	1.2	10.0/9.0	80	100 min.	5000	0.4
4N36	7.12x6.5x3.5	1.2	10.0/9.0	80	100 min.	5000	0.4
4N37	7.12x6.5x3.5	1.2	10.0/9.0	80	100 min.	5000	0.4
4N38	7.12x6.5x3.5	1.2	10.0/9.0	80	20 min.	5000	0.4
CNY17-1	7.12x6.5x3.5	--	6.0/8.0	80	40~80	5000	0.4
CNY17-2	7.12x6.5x3.5	--	6.0/8.0	80	63~125	5000	0.4
CNY17-3	7.12x6.5x3.5	--	6.0/8.0	80	100~200	5000	0.4
CNY17-4	7.12x6.5x3.5	--	6.0/8.0	80	160~320	5000	0.4
*CNY17F-1	7.12x6.5x3.5	--	6.0/8.0	80	40~80	5000	0.4
*CNY17F-2	7.12x6.5x3.5	--	6.0/8.0	80	63~125	5000	0.4
*CNY17F-3	7.12x6.5x3.5	--	6.0/8.0	80	100~200	5000	0.4
*CNY17F-4	7.12x6.5x3.5	--	6.0/8.0	80	160~320	5000	0.4
H11A1	7.12x6.5x3.5	1.2	3.0/3.0	80	50 min.	5000	0.4
H11A2	7.12x6.5x3.5	1.2	3.0/3.0	80	20 min.	5000	0.4
H11A3	7.12x6.5x3.5	1.2	3.0/3.0	80	20 min.	5000	0.4
H11A4	7.12x6.5x3.5	1.2	3.0/3.0	80	10 min.	5000	0.4
H11A5	7.12x6.5x3.5	1.2	3.0/3.0	80	30 min.	5000	0.4
MCT2E	7.12x6.5x3.5	1.23	3.0/3.0	80	20 min.	5000	0.4
TIL111	7.12x6.5x3.5	1.22	6.0/8.0	80	--	5000	0.4
TIL117	7.12x6.5x3.5	1.2	6.0/8.0	80	50 min.	5000	0.4

Star mark * : Please refer to the schematic of Pin configuration with " * " mark

Photo Coupler ❙ Transistor ❙ 6Pin DIP-AC

UNIT : mm

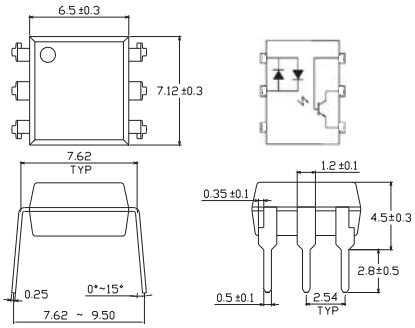

Product	Size (LXWXHmm)	V_F_Typ (V)	Rise / Fall Time (μs)	BV_{CEO} – Min (V)	CTR (%)	Viso (V_{rms})	$V_{CE(SAT)}$_Max (V)
H11AA1	7.12x6.5x3.5	1.2	10.0 / 10.0	80	20 min.	5000	0.4
H11AA2	7.12x6.5x3.5	1.2	10.0 / 10.0	80	10 min.	5000	0.4
H11AA3	7.12x6.5x3.5	1.2	10.0 / 10.0	80	50 min.	5000	0.4
H11AA4	7.12x6.5x3.5	1.2	10.0 / 10.0	80	100 min.	5000	0.4

Photo Coupler I Transistor I 8Pin DIP-DC

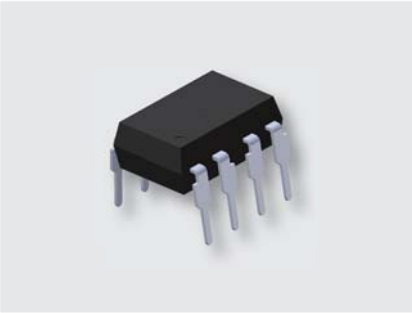

UNIT : mm

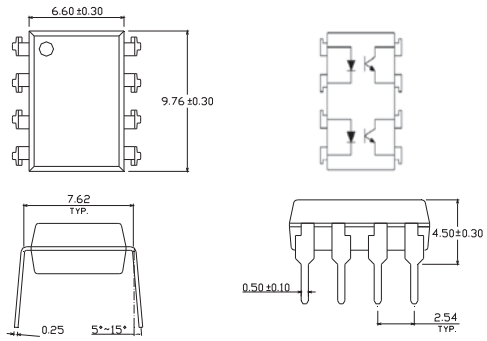

Product	Size (LXWXHmm)	V_F_Typ (V)	Rise / Fall Time (μs)	BV_{CEO}_ Min (V)	CTR (%)	Viso (V_{rms})	$V_{CE(SAT)}$_Max (V)
EL827	9.76x6.5x3.5	1.2	3.0 / 4.0	80	50~600	5000	0.4

Photo Coupler I Transistor I 8Pin SOP-DC

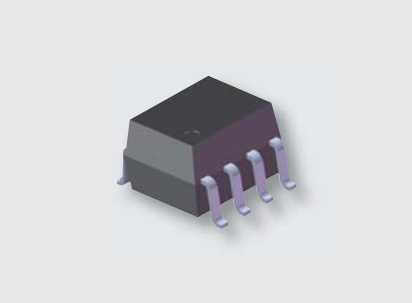

UNIT : mm

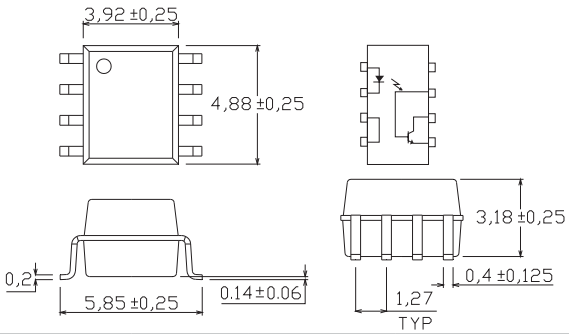

Product	Size (LXWXHmm)	V_F_Typ (V)	Rise / Fall Time (μs)	BV_{CEO}_ Min (V)	CTR (%)	Viso (V_{rms})	$V_{CE(SAT)}$_Max (V)
EL205	4.88x3.92x3.18	1.2	1.6 / 2.2	80	40~80	3750	0.4
EL206	4.88x3.92x3.18	1.2	1.6 / 2.2	80	63~125	3750	0.4
EL207	4.88x3.92x3.18	1.2	1.6 / 2.2	80	100~200	3750	0.4
EL208	4.88x3.92x3.18	1.2	1.6 / 2.2	80	160~320	3750	0.4
EL211	4.88x3.92x3.18	1.2	1.6 / 2.2	80	20 min.	3750	0.4
EL212	4.88x3.92x3.18	1.2	1.6 / 2.2	80	50 min.	3750	0.4
EL213	4.88x3.92x3.18	1.2	1.6 / 2.2	80	100 min.	3750	0.4
EL215	4.88x3.92x3.18	1.2	1.6 / 2.2	80	10 min.	3750	0.4
EL216	4.88x3.92x3.18	1.2	1.6 / 2.2	80	50 min.	3750	0.4
EL217	4.88x3.92x3.18	1.2	1.6 / 2.2	80	100 min.	3750	0.4

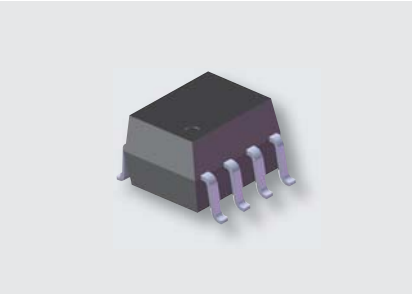

UNIT : mm

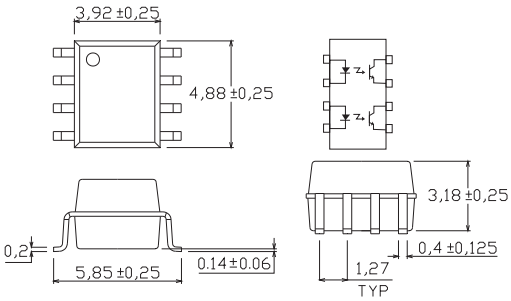

Product	Size (LXWXHmm)	V_F_Typ (V)	Rise / Fall Time (μs)	BV_{CEO}_ Min (V)	CTR (%)	Viso (V_{rms})	$V_{CE(SAT)}$_Max (V)
ELD205	4.88x3.92x3.18	1.2	1.6 / 2.2	80	40~80	3750	0.4
ELD206	4.88x3.92x3.18	1.2	1.6 / 2.2	80	63~125	3750	0.4
ELD207	4.88x3.92x3.18	1.2	1.6 / 2.2	80	100~200	3750	0.4
ELD211	4.88x3.92x3.18	1.2	1.6 / 2.2	80	20 min.	3750	0.4
ELD213	4.88x3.92x3.18	1.2	1.6 / 2.2	80	100 min.	3750	0.4
ELD217	4.88x3.92x3.18	1.2	1.6 / 2.2	80	100 min.	3750	0.4

Photo Coupler ❙ Triac ❙ 4Pin SOP

UNIT : mm

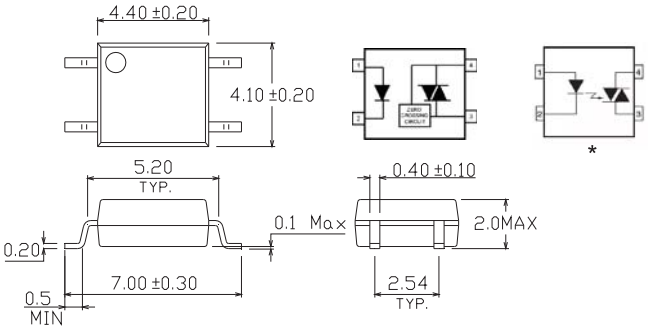

Product	Size (LXWXHmm)	V_{TM} (V)	V_{INH} (V)	V_{DRM} (V)	V_F_Typ (V)	Viso (V_{rms})	I_{FT} (mA)
ELM3042	4.40x4.10x2.0	3	20	400	1.5	3750	10
ELM3043	4.40x4.10x2.0	3	20	400	1.5	3750	5
ELM3044	4.40x4.10x2.0	3	20	400	1.5	3750	3
ELM3062	4.40x4.10x2.0	3	20	600	1.5	3750	10
ELM3063	4.40x4.10x2.0	3	20	600	1.5	3750	5
ELM3064	4.40x4.10x2.0	3	20	600	1.5	3750	3
ELM3082	4.40x4.10x2.0	3	20	800	1.5	3750	10
ELM3083	4.40x4.10x2.0	3	20	800	1.5	3750	5
ELM3084	4.40x4.10x2.0	3	20	800	1.5	3750	3
*ELM3022	4.40x4.10x2.0	2.5	--	400	1.2	3750	10
*ELM3023	4.40x4.10x2.0	2.5	--	400	1.2	3750	5
*ELM3024	4.40x4.10x2.0	2.5	--	400	1.2	3750	3
*ELM3052	4.40x4.10x2.0	2.5	--	600	1.2	3750	10
*ELM3053	4.40x4.10x2.0	2.5	--	600	1.2	3750	5
*ELM3054	4.40x4.10x2.0	2.5	--	600	1.2	3750	3

Star mark * : Please refer to the schematic of Pin configuration with " * " mark

Photo Coupler ▌Triac ▌6Pin DIP

UNIT : mm

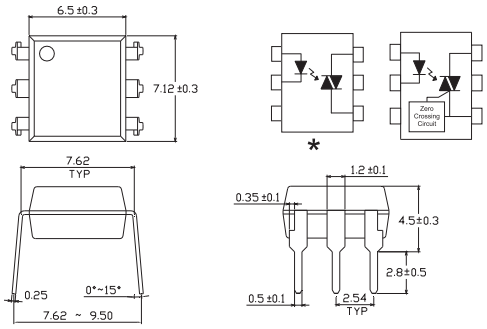

Product	Size (LXWXHmm)	V_{TM} (V)	V_{INH} (V)	V_{DRM} (V)	V_F_Typ (V)	Viso (V_{rms})	I_{FT} (mA)
EL3031	7.12x6.5x3.5	3	20	250	--	5000	15
EL3032	7.12x6.5x3.5	3	20	250	--	5000	10
EL3033	7.12x6.5x3.5	3	20	250	--	5000	5
EL3041	7.12x6.5x3.5	3	20	400	--	5000	15
EL3042	7.12x6.5x3.5	3	20	400	--	5000	10
EL3043	7.12x6.5x3.5	3	20	400	--	5000	5
EL3061	7.12x6.5x3.5	3	20	600	--	5000	15
EL3062	7.12x6.5x3.5	3	20	600	--	5000	10
EL3063	7.12x6.5x3.5	3	20	600	--	5000	5
EL3081	7.12x6.5x3.5	3	20	800	--	5000	15
EL3082	7.12x6.5x3.5	3	20	800	--	5000	10
EL3083	7.12x6.5x3.5	3	20	800	--	5000	5
*EL3010	7.12x6.5x3.5	2.5	--	250	1.18	5000	15
*EL3011	7.12x6.5x3.5	2.5	--	250	1.18	5000	10
*EL3012	7.12x6.5x3.5	2.5	--	250	1.18	5000	5
*EL3021	7.12x6.5x3.5	2.5	--	400	1.18	5000	15
*EL3022	7.12x6.5x3.5	2.5	--	400	1.18	5000	10
*EL3023	7.12x6.5x3.5	2.5	--	400	1.18	5000	5
*EL3051	7.12x6.5x3.5	2.5	--	600	1.18	5000	15
*EL3052	7.12x6.5x3.5	2.5	--	600	1.18	5000	10
*EL3053	7.12x6.5x3.5	2.5	--	600	1.18	5000	5

Star mark * : Please refer to the schematic of Pin configuration with " * " mark

ASIA

TAIWAN

TAICHUNG
EVERLIGHT ELECTRONICS CO., LTD.
No. 35, Lane Guoguang, 6th Neighborhood
Yutian Village, Yuanli Township,
Miaoli County 35874, Taiwan
TEL: 886-37-741000
FAX: 886-37-740776
EMAIL: marketing@everlight.com

TAINAN
EVERLIGHT ELECTRONICS CO., LTD.
16F.-1, No.389, Sec. 3, Zhonghua E. Rd.,
East Dist., Tainan City 701, Taiwan
TEL: +886-6-260-2357
EMAIL: robertchen@everlight.com

CHINA

HONG KONG
EVLITE ELECTRONICS CO., LTD.
Units 1606-1608, 16/F., Prosperity Place,
6 Shing Yip Street, Kwun Tong, Kowloon,
Hong Kong
TEL: +852-23880602
FAX: +852-23881127, 23843092
EMAIL: hkcm@everlight.com

GUANGZHOU
EVERLIGHT ELECTRONICS (BVI) CO., LTD.
205 2F, Business Building Shatou,
East Yushan Rd., Panyu Town, Guangzhou,
PRC, China
Postcode: 511490
TEL: +86-(0)20-84663392
FAX: +86-(0)20-84663372
EMAIL: chcm@everlight.com

SUZHOU
EVERLIGHT ELECTRONICS (CHINA) CO., LTD.
Room 306-308, Block 1, Runjie Square, No. 9,
Road Dengwei, Suzhou (SND), Jiang Su, China
Postcode: 215011
TEL: +86-(0)512-68020883
EMAIL: chsha@everlight.com

TIANJIN
EVERLIGHT ELECTRONICS (BVI) CO., LTD.
Room. 2208, Vanke Center Building, No. 290,
Zhongshan Rd., Hebei District, Tianjin, China
Postcode: 300141
TEL: +86-22-26351122, 26351133
EMAIL: chsha@everlight.com

KOREA

EVERLIGHT OPTOELECTRONICS
KOREA CO., LTD.
5F, Yoksamdong 720-2, Kangnamku,
Seoul, Korea
TEL: +82-2-562-8088
FAX: +82-2-562-6588
EMAIL: danieljo@everlight.com

MALAYSIA

EVERLIGHT OPTOELECTRONICS
(M) SDN BHD
B-04-20 Krystal Point,
303 Jalan Sultan Azlan Shah,
11900 Penang, Malaysia
TEL: +60-4-646-4233
FAX: +60-4-646-5233
EMAIL: inquiry@everlight-pg.com.my

JAPAN

E&E JAPAN CO., LTD.
Kindaikagakysha 7F, 2-7-15, Ichigayatamachi,
Shinjuku-ku, Tokyo, 162-0843, Japan
TEL: +81-(0)3-3267-6761
FAX: +81-(0)3-5225-6771
EMAIL: eejp@eejp.co.jp
www.eejp.co.jp

AMERICA

TEXAS USA

EVERLIGHT AMERICAS INC.
3220 Commander Dr. Suite 100 Carrollton,
Texas, 75006, United States
TEL: +1-972-490-4008
FAX: +1-972-490-5009
EMAIL: salesmarketing@everlightamericas.com

CALIFORNIA USA

EVERLIGHT AMERICAS INC.
327 Piercy Road, San Jose, CA 95138, USA
TEL: +1-408-225-7800
FAX: +1-408-225-7800
EMAIL: salesmarketing@everlightamericas.com

CANADA

EVERLIGHT CANADA
P.O. Box 86056, 1011 Upper Middle Road,
Oakville,
Ontario, Canada L6H 5V6
TEL: +1-905-315-5050
FAX: +1-905-336-0040
EMAIL: everlightcanada@everlight.com

EUROPE

GERMANY, HQ

EVERLIGHT ELECTRONICS EUROPE GMBH
Siemensallee 84, Building 7302, 5F,
76187 Karlsruhe, Germany
TEL: +49-721-82447-3
FAX: +49-721-82447-40
EMAIL: Info@everlight-eu.de

GERMANY, MUNICH

EVERLIGHT ELECTRONICS EUROPE GMBH
Rote-Kreuz-Strase 8, 85737 Ismaning, Germany
TEL: +49-89-9400336-0
FAX: +49-89-9400336-29
EMAIL: info@everlight-eu.de

NORDIC

EVERLIGHT ELECTRONICS EUROPE GMBH
IsafJordsgatan 22, 164 40 Kista, Stockholm,
Sweden
TEL: +46-8375618
EMAIL: nordic@everlight-eu.de

HEADQUARTERS

EVERLIGHT ELECTRONICS CO., LTD.
No. 25, Lane 76, Sec. 3, Chung Yang Rd. Tucheng Dist., New Taipei City, Taiwan 23671
TEL: +886-2-22672000 FAX: +886-2-2267-6244 2267-6189

www.everlight.com

EVERLIGHT

HEADQUARTERS
EVERLIGHT ELECTRONICS CO., LTD.
No. 25, Lane 76, Sec. 3, Chung Yang Rd. Tucheng Dist., New Taipei City, Taiwan 23671
TEL: +886-2-22672000 FAX: +886-2-2267-6244 2267-6189

www.everlight.com

Copyright © EVERLIGHT 2011

CT1104QXXV-2

Mouser Electronics

Authorized Distributor

Click to View Pricing, Inventory, Delivery & Lifecycle Information:

Everlight:

ALS-PT17-51C/L177/TR8 ALS-PT204-6C/L177 ALS-PT243-3C/L177