Vera Rubin NVL72

NVL Topology

- Radix of 72 means NVL72 is largest L1 domain
  - Same as Blackwell
- 1800 GB/s/dir per GPU on 36 planes
  - 2x vs. Blackwell
- 9 switch trays with 4 switch ASICs each
  - 2x switch ASICs vs. Blackwell

Note: non-scalable NLV72 pictured but scalable NVL36 also possible

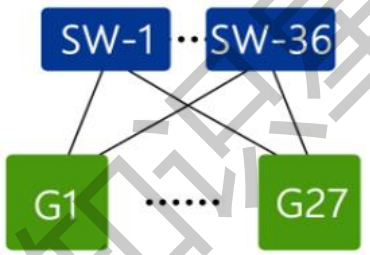

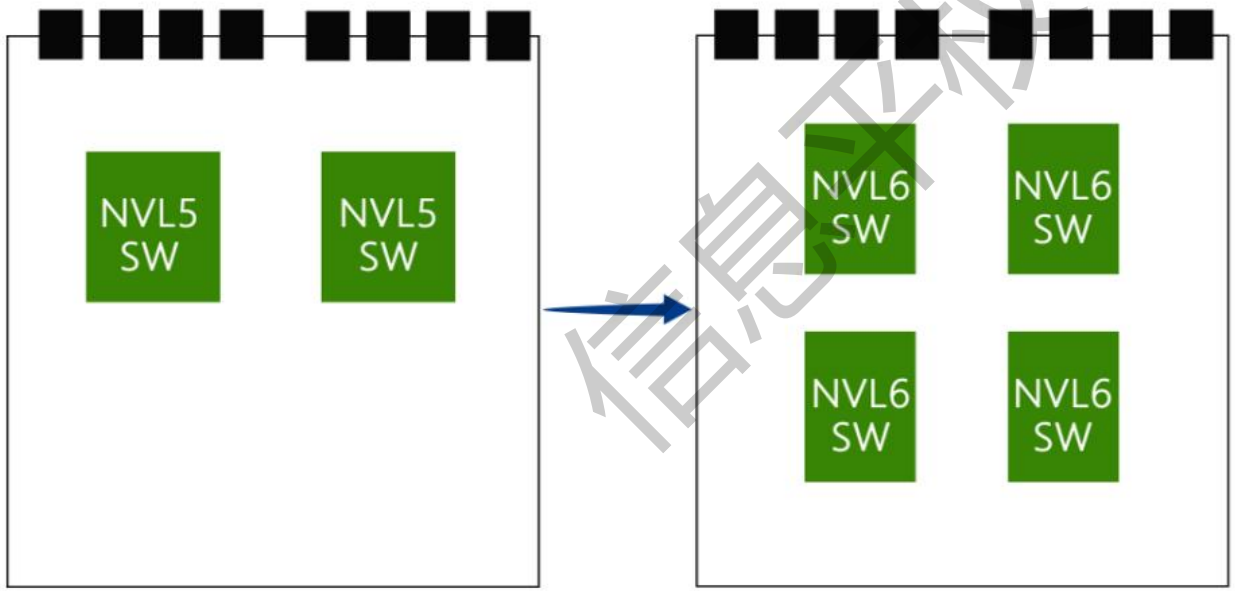

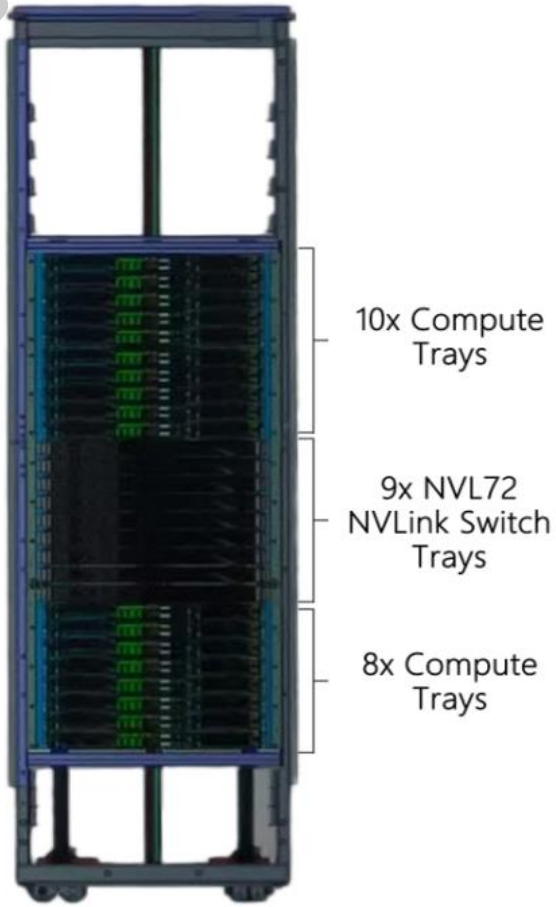

信息平权 知识星球

Increased GPU Density

Background

- Motivation
  - Overarching goal is Perf/W and Perf/TCO
  - Part of delivering this means connecting more GPUs at higher bandwidth at minimal power/cost and highest possible reliability
  - Passive copper is lowest power, lowest cost, highest reliability, lowest risk interconnect
- Continue to drive density to enable more passive copper interconnect
- Looking at multiple vectors to achieve this
  - 100% liquid cooled-fanless, two sided service

    Orthogonal compute/switch arrangement
  - More content on fewer PCBs-cut down cables and connectors
  - Power infrastructure-support for higher power,

    push AC/DC conversion out of critical volume, etc..
  - More
- Exploring concepts with 288 GPUs per rack

信息产权 知识星球

Vera Rubin Systems Overview

- Focus Ares for guiding datacenter infrastructure planning
  - NVL72
  - Future system concepts with dense GPU rack
- Future discussions topics
  - NVL8
  - Large NVL Air cooled configs (i.e. follow-on to GB200A NVL36)
- Requesting feedback
  - VR200 node topology
  - Denser GPU racks with higher power for long lead infrastructure planning

信息平权 知识星球

System Architecture

Future Roadmap

Continue to drive density to connect more GPUs at higher bandwidth with lowest power/cost and highest reliability

Rubin-Next with new high radix NVL switch + denser system design enables 4x larger NVLink domain in single large L1 and copper interconnect

- Larger effective NVL domain size
- Better binpacking/higher availability in presence of failures

High density + high radix Spectrum switch eanbles In-Rack L1 switch and NIC⇔L1 connectivity in copper while maintaining good 2-level scale

- Lower power/cost
- Improved Reliability

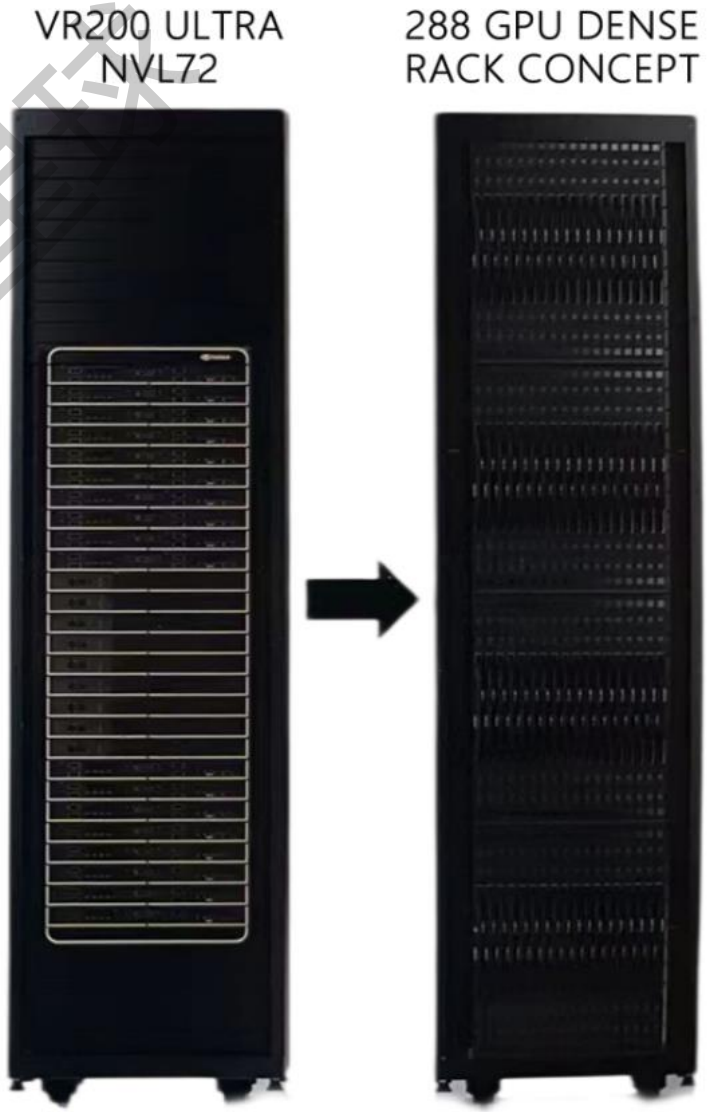

信息平权 知识星球

System Architecture Evolution

	HGX	MGX NVL72	Future Concept
GPUs per Rack	32	72	288
Copper NVL Domain	8	72	288
Rack Power	~50 kW	~120-250 kW	~1 MW
Cooling	100% Air	~85% Liquid ~15% Air	100% Liquid
Node Size	8 GPUs	4 GPUs	~1 MW
GPU↔CPU	PCIe	C2C	2-4 GPUs
Interface			C2C
PCIe Retimers	Yes	NO	NO
E/W Network NIC↔L1 Cable	Optics	Optics	Copper

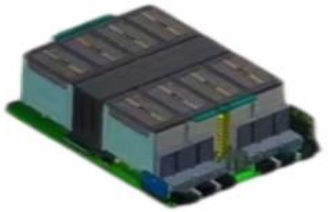

信息平台职只星球