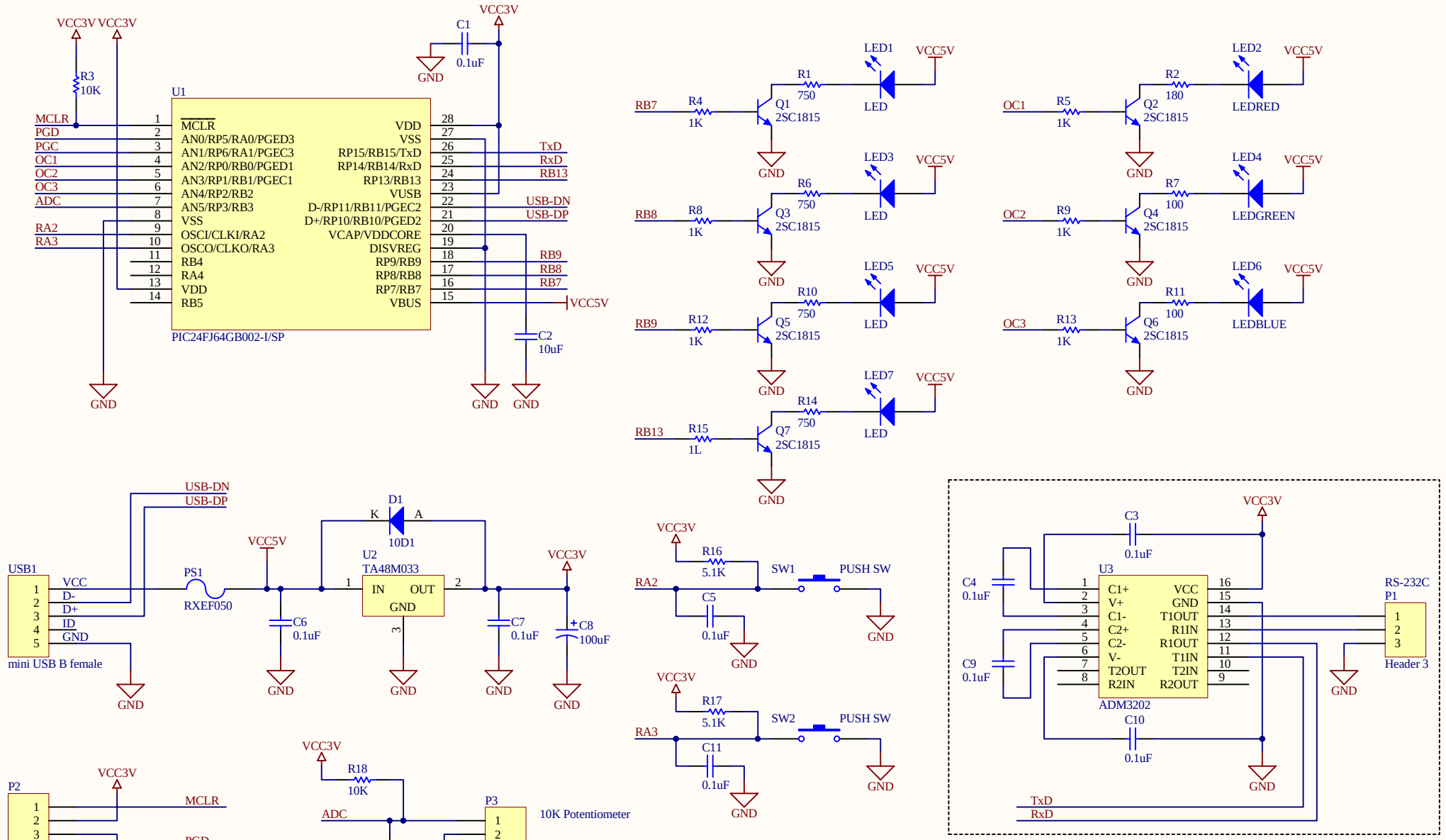
U1
PIC24FJ64GB002-I/SP
MCLR
AN0/RP5/RA0/PGED3
AN1/RP6/RA1/PGEC3
AN2/RP0/RB0/PGED1
AN3/RP1/RB1/PGEC1
AN4/RP2/RB2
AN5/RP3/RB3
VSS
OSCI/CLKI/RA2
OSCO/CLKO/RA3
RB4
RA4
VDD
RB5
VDD
VSS
RP15/RB15/TxD
RP14/RB14/RxD
RP13/RB13
VUSB
D-/RP11/RB11/PGEC2
D+/RP10/RB10/PGED2
VCAP/VDDCORE
DISVREG
RP9/RB9
RP8/RB8
RP7/RB7
VBUS
VCC3V
VCC5V
GND
R3 10K
C1 0.1uF
C2 10uF
TxD
RxD
RB13
USB-DN
USB-DP
RB9
RB8
RB7
LED1
LED2
LED3
LED4
LED5
LED6
LED7
LED
LEDRED
LEDGREEN
LEDBLUE
Q1 2SC1815
Q2 2SC1815
Q3 2SC1815
Q4 2SC1815
Q5 2SC1815
Q6 2SC1815
Q7 2SC1815
R1 750
R2 180
R4 1K
R5 1K
R6 750
R7 100
R8 1K
R9 1K
R10 750
R11 100
R12 1K
R13 1K
R14 750
R15 1L
OC1
OC2
OC3
USB1
mini USB B female
VCC
D-
D+
ID
PS1
RXEF050
D1
10D1
U2
TA48M033
IN
OUT
C6 0.1uF
C7 0.1uF
C8 100uF
R16 5.1K
R17 5.1K
SW1
SW2
PUSH SW
C5 0.1uF
C11 0.1uF
U3
ADM3202
C1+
V+
C1-
C2+
C2-
V-
T2OUT
R2IN
T1OUT
R1IN
R1OUT
T1IN
T2IN
R2OUT
C3 0.1uF
C4 0.1uF
C9 0.1uF
C10 0.1uF
RS-232C
P1
Header 3
P2
Header 5
MCLR
PGD
PGC
R18 10K
ADC
P3
Header 2
10K Potentiometer
C12 1uF
Title
Size
A4
Number
Revision
Date: 2016/08/02
Sheet of
File: D:\Documents and Settings\..\Pic24UsbIo.SchDoc
Drawn By: