USB TO SERIAL

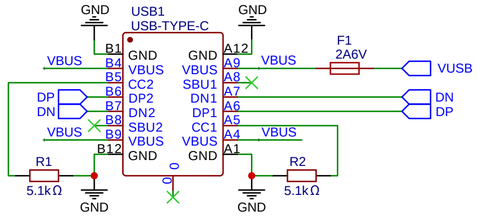

AUTORESET

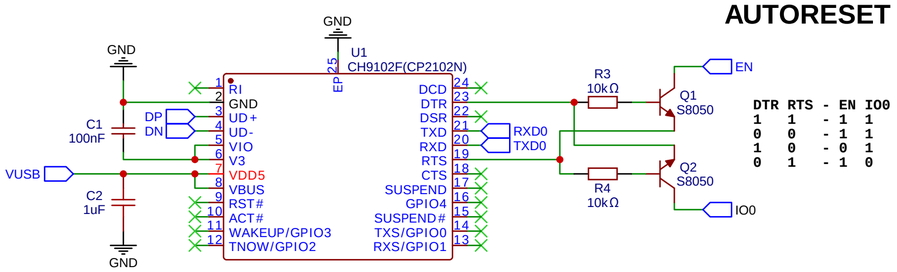

DTR	RTS	-	EN	IO0
1	1	-	1	1
0	0	-	1	1
1	0	-	0	1
0	1	-	1	0

LIPO CHARGER

Charging Current Selector J1
Disconnected ≈ 200mA
Connected ≈ 400mA

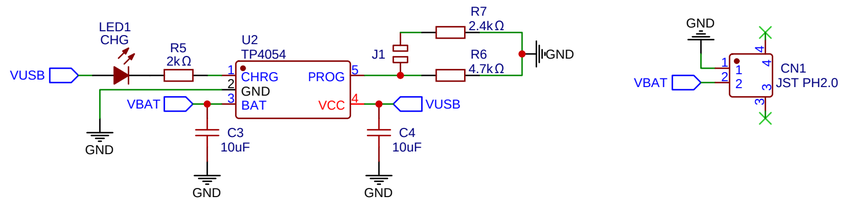

ESP32-D0WD

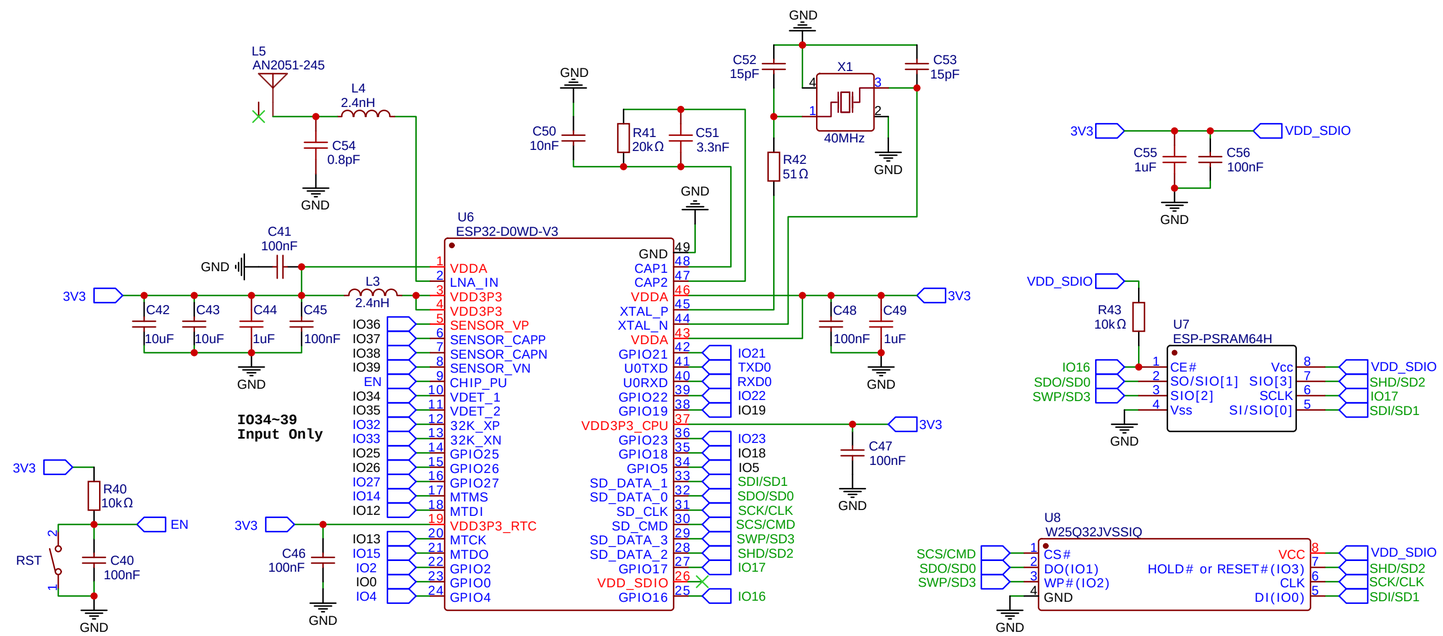

VOLTAGE REGULATOR

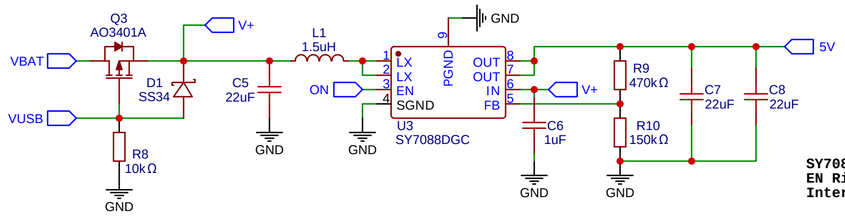

POWER SWITCH

SY7088DGC
EN Rising Threshold 1.2V Min
Internal integrated 1MΩ pull-down resistor

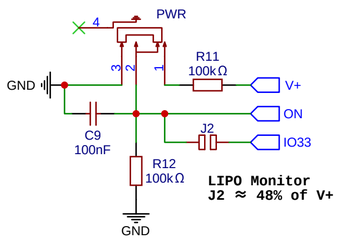

LIPO Monitor
J2 ≈ 48% of V+

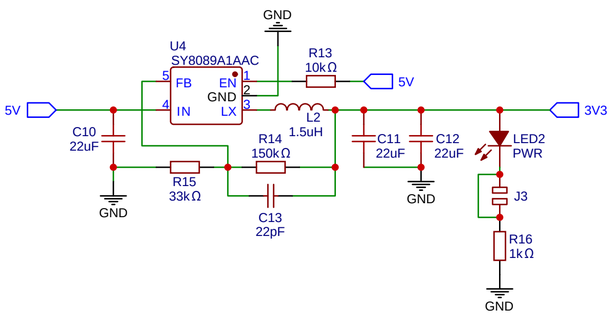

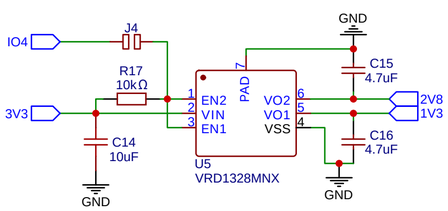

HEADERS

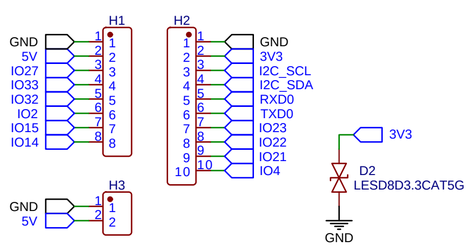

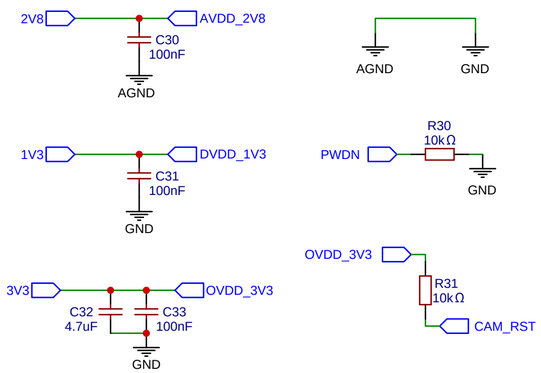

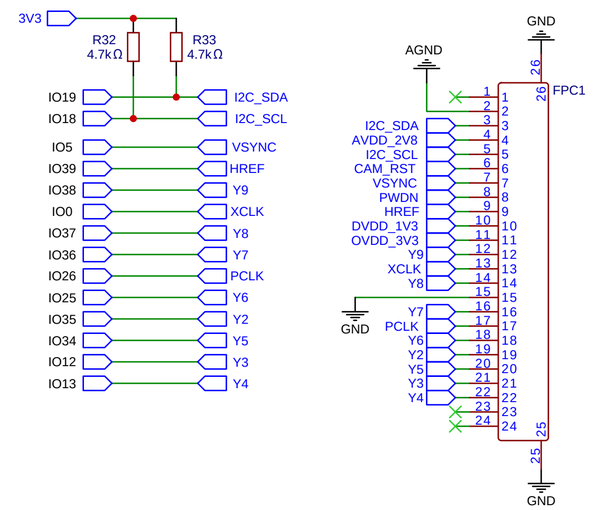

CAMERA OV2640

SD CARD

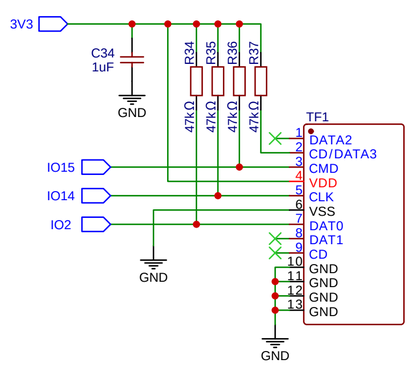

TITLE: **Camera-1**	REV: 1.1
Company: Node-Matrix	Sheet: 1/1
Date: 2025-03-07	Drawn By: Jason Yang