CONCISE EUROCODE

FOR THE DESIGN OF CONCRETE BUILDINGS

Based on BSI publication
DD ENV 1992-1-1: 1992.
Eurocode 2: Design of concrete structures.
Part 1. General rules and rules for buildings.

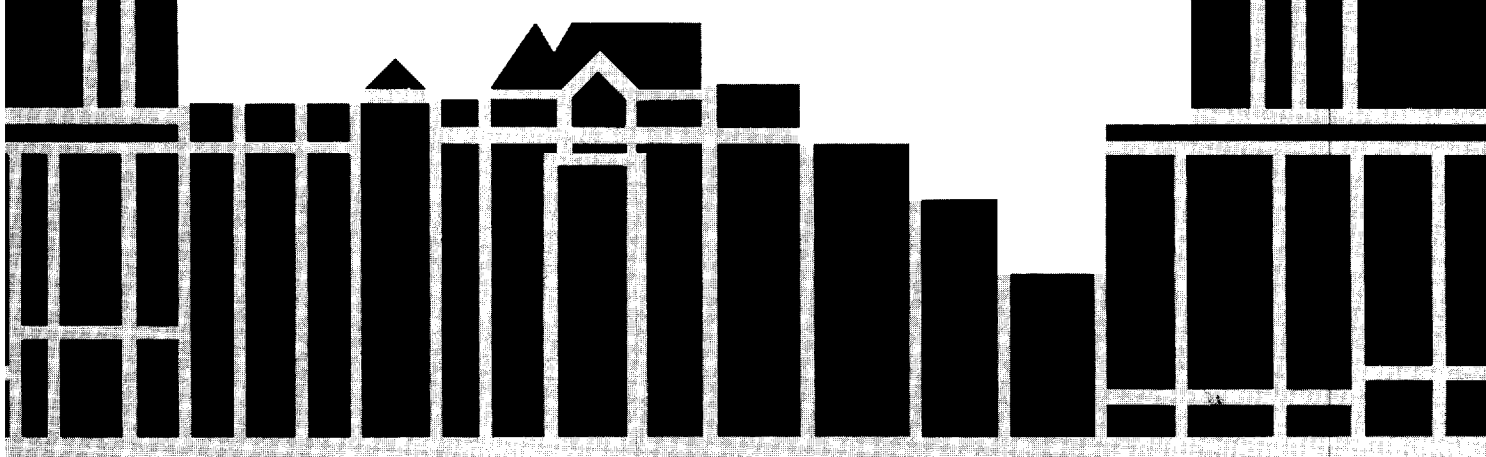

BCA

This Concise Code has been prepared for the BCA by:

A. W. Beeby BSc, PhD, CEng, MICE, MIStructE, FACI
Professor of Structural Engineering, University of Leeds

and

R. S. Narayanan BE, MSc, DIC, CEng, FIStructE
Partner, S. B. Tietz and Partners, Consulting Engineers.

The work was monitored by a steering committee, consisting of the authors, together with:

S. B. Desai CEng, FIStructE
Department of the Environment

and

A.J. Threlfall BEng, DIC
British Cement Association.

The British Cement Association is grateful for financial contributions from the Precast Concrete Frame Association, the Precast Flooring Federation and the Reinforced Concrete Council in support of this publication.

43.504
First published 1993
ISBN 0 7210 1445 3
Price group LM
© British Cement Association 1993

Published by
British Cement Association
Century House, Telford Avenue,
Crowthorne, Berks RG11 6YS
Telephone (0344) 762676
Fax (0344) 761214

All advice or information from the British Cement Association is intended for those who will evaluate the significance and limitations of its contents and take responsibility for its use and application. No liability (including that for negligence) for any loss resulting from such advice or information is accepted. Readers should note that all BCA publications are subject to revision from time to time and should therefore ensure that they are in possession of the latest version.

CONCISE EUROCODE

FOR THE DESIGN OF CONCRETE BUILDINGS

Based on BSI publication
DD ENV 1992-1-1: 1992.
Eurocode 2: Design of concrete structures.
Part 1. General rules and rules for buildings.

Published by the British Cement Association
Century House, Telford Avenue, Crowthorne, Berkshire RG11 6YS

July 1993

FOREWORD

Eurocode 2: *Design of concrete structures,* Part 1: *General rules and rules for buildings* (EC2)[1] sets out both the principles for the design of all types of concrete structure, and design rules for buildings. The early sections are common to all Eurocodes and are thus more complex and general than would be necessary for concrete design alone. This Concise Code aims to distil from EC2 only that material necessary for the design of everyday reinforced and prestressed concrete buildings. The material in the body of this Concise Code is taken either directly from EC2, or can be derived unambiguously from the EC2 provisions. The actual wording of EC2 has, however, not been retained if a clearer form of words could be found.

BS 8110[2] and other British codes differ from EC2 in that they contain a considerable amount of material which those drafting EC2 would have considered to belong more properly in a manual. This includes bending moment coefficients for beams and slabs, design charts, etc. This material is included as an appendix to this Concise Code, so that designers should have available all the information that they would normally expect to find in a British code.

The material in this document is presented in the order in which it appears in EC2. This is different from the order used in BS 8110 but it is believed that use of the Eurocode order will help users to learn EC2. To help further, references are given in the right-hand margin to the number of the clause in EC2 from which the material has been taken. In any situation where there is doubt about the interpretation, easy reference can be made to EC2 itself.

In a number of areas, EC2 permits the design to be carried out by a variety of methods. In general, this document has only included the most straightforward of these options. For example, EC2 permits the use of a variety of possible concrete stress blocks for the design of sections but only the rectangular stress block is included here.

One area where the EC2 terminology has caused problems for the UK reader is its use of the word 'actions'. This is a logical term used to describe all the things that can act on a structure. The definition states that it includes 'direct actions' (loads) and 'indirect actions' (imposed deformations). In design there is rarely any necessity to use a term which covers both these possibilities, so it does not seem to violate the Eurocode approach if the words 'loads' and 'imposed deformations' continue to be used in their appropriate context. Indeed, this seems to be what has been done beyond Section 2 in EC2. The term 'actions' is not, therefore, used here.

EC2 contains a considerable number of parameters for which only indicative values are given. Each country may specify its own values for these parameters which, in EC2, are indicated by being enclosed by a box (|_____|). The appropriate values for use in the UK are set out in the National Application Document (NAD)[3] which has been drafted by BSI. In this Concise Code, the UK values for those in the EC2 boxes have been used, and any amendments given in the NAD have been written in. Where this has been done it is indicated by NAD in the right-hand margin. The boxed values are not distinguished in the text.

The NAD also includes a number of amendments to the rules in EC2 where, in the experimental stage of using EC2, it was felt that the EC2 rules either did not apply, or were incomplete. One such area is design for fire resistance, which EC2 does not cover at present. In this instance, the NAD states that the rules in BS 8110 should be applied.

This Concise Code does not cover the contents of EC2 Chapter 6, *Construction and workmanship*, and Chapter 7, *Quality control.*

CONTENTS

1 SCOPE AND SYMBOLS 5
1.1 Scope 5
1.2 Symbols 5

2 BASIS OF DESIGN 6
2.1 Fundamental objectives of design . 6
2.2 Definitions 6
2.3 Materials 7
2.4 Design procedure 7

3 ANALYSIS 8
3.1 Definitions 8
3.2 Methods of analysis for the ultimate limit state 8
3.3 Load combinations and load patterns 9
3.4 Minimum horizontal load 10
3.5 Redistribution 10

4 COVER, DURABILITY AND FIRE RESISTANCE 11
4.1 Cover, general 11
4.2 Cover and concrete quality for durability 11
4.3 Cover and member sizes for fire resistance 12

5 DESIGN FOR THE ULTIMATE LIMIT STATE 14
5.1 Bending and axial load 14
5.2 Shear resistance of beams and slabs 15
5.3 Torsion 17
5.4 Punching shear 17
5.5 Slender columns and beams . . . 19
5.6 Walls 22
5.7 Strut-and-tie method 23
5.8 Corbels and deep beams 24

6 SERVICEABILITY 25
6.1 General 25
6.2 Control of cracking 25
6.3 Control of deflections 27

7 DETAILING 29
7.1 General 29
7.2 General arrangement 29
7.3 Bond 30
7.4 Anchorage 31
7.5 Laps 33
7.6 Additional rules for high-bond bars over 32 mm in size 35
7.7 Bundled bars 36
7.8 Structural members 37
7.9 Limitation of damage caused by accidental loads 41

8 PRESTRESSED CONCRETE . . . 42
8.1 Scope 42
8.2 Partial safety factors 42
8.3 Material properties 42
8.4 Minimum number of bars, wires or tendons in isolated members 42
8.5 Initial prestressing force 43
8.6 Loss of prestress 43
8.7 Design value of prestress 46
8.8 Analysis of the structure – ultimate limit state 47
8.9 Design of sections – ultimate limit state 47
8.10 Serviceability limit state 47
8.11 Anchorage zones 49
8.12 Detailing 50

APPENDIX
A1 Introduction 52
A2 Analysis of simple framed structures 52
A2.1 General 52
A2.2 Simplification of framed structures 52
A3 Analysis of slab systems 55
A3.1 General 55
A3.2 Slabs supported on four sides with corners prevented from lifting 55
A3.3 Flat slabs with or without drops 59
A4 Design of sections for flexure, or combined flexure and axial load . 62
A4.1 Concrete grades 62
A4.2 Rectangular sections 63
A4.3 Flanged beams 65
A4.4 Symmetrically reinforced rectangular columns 65
A4.5 Bi-axially bent rectangular column sections 71
A5 Slender columns 73
A5.1 Effective length of braced columns 73
A5.2 Estimation of second-order eccentricity 73
A6 Serviceability 74
A6.1 Crack control 74
A6.2 Deflection control 74
A7 Anchorage and lap lengths 76
A8 Simplified rules for the curtailment of reinforcement 77
A8.1 General 77
A8.2 Near internal supports in continuous beams 77
A8.3 Bottom reinforcement near end supports 78
A8.4 Curtailment in slabs 78

REFERENCES 79

1 SCOPE AND SYMBOLS

1.1 Scope

This Concise Code provides rules for the design of reinforced and prestressed concrete building structures. Designs carried out in accordance with this code will be in accordance with EC2, although advantage has not been taken of all the possibilities offered within EC2.

This Concise Code is intended specifically for use within the United Kingdom and incorporates the requirements of the National Application Document (NAD).

The clauses are cross-referenced to those clauses in EC2 which cover the same material, and reference should be made to EC2 where more information is needed.

The Appendix provides design charts and other aids to the designer.

1.2 Symbols

Most symbols are defined where they are used within the text. The following symbols are used throughout the document:

A_c	Area of concrete cross-section
A_p	Area of prestressing tendons
A_s	Area of tension reinforcement
$A_{s,req}$	Area of tension reinforcement required for the ultimate limit state
$A_{s,prov}$	Area of tension reinforcement provided
A_{sw}	Area of shear reinforcement
b	Overall breadth of a section
d	Effective depth of a section
E_{cm}	Secant modulus of elasticity of concrete
E_s	Modulus of elasticity of reinforcement or prestressing steel
f_{ck}	Characteristic strength of concrete based on tests on cylinders
f_{ctm}	Mean value of axial tensile strength of concrete
f_{pk}	Characteristic tensile strength of prestressing steel
f_{yk}	Characteristic strength of reinforcement
h	Overall depth of a section
M_{Sd}	Design bending moment
N_{Sd}	Design axial force due to loading or prestress
s	Spacing of reinforcement
V_{Sd}	Design shear force
γ_c	Partial safety factor for concrete
γ_s	Partial safety factor for reinforcement or prestressing steel
ϕ	Bar size

2 BASIS OF DESIGN

2.1 Fundamental objectives of design

2.1

(1) A structure should be designed and constructed in such a way that:

(a) with acceptable probability, it will remain fit for its specified use, having due regard to its intended life and its cost;

(b) with appropriate degrees of reliability, it will sustain all loads and imposed deformations likely to occur during construction and use, and have adequate durability in relation to its maintenance costs.

(2) A structure should also be designed in such a way that it will not sustain damage disproportionate to the original cause, resulting from events such as explosions, impact, or the consequences of human error. This may be achieved by one or more of the following:

(a) avoiding, eliminating, or reducing the possible hazards to which the structure could be subjected;

(b) selecting a structural form which has a low sensitivity to the hazards considered;

(c) selecting a structural form which can survive the accidental removal of individual elements;

(d) tying the structure together.

2.2 Definitions

2.2.1

(1) **Limit states** are states beyond which the structure no longer satisfies the design performance requirements. Limit states are classified as:

1. **Ultimate limit states**, associated with collapse or with other forms of structural failure.

2. **Serviceability limit states**, corresponding to states beyond which specified service requirements are no longer met.

2.2.2

(2) **Loads** are defined as **permanent loads** (self-weight of structure, fittings, finishes and fixed equipment) or **variable loads** (imposed loads, wind loads, and snow loads).

Loads are specified by their **characteristic values** (G_k is the characteristic permanent load, Q_k is the characteristic variable load). In calculations, **design loads** are used. These are obtained by multiplying the characteristic loads by appropriate **partial safety factors** (γ_f). Characteristic loads should be obtained from:

NAD

BS 6399[4]: Part 1: 1984. *Code of practice for dead and imposed loads.*
BS 6399: Part 3: 1988. *Code of practice for imposed roof loads.*
CP 3[5]: Chapter V: Part 2: 1972. *Wind loads.*

Imposed floor loads may be reduced in accordance with the factors given in BS 6399: Part 1. Snow drift loads obtained from BS 6399: Part 3 should be multiplied by 0.7. Wind loads obtained from CP 3: Chapter V: Part 2 should be multiplied by 0.9.

The self-weight of a structure may be assessed on the basis of the nominal dimensions and conventional values for the densities of materials. Prestress is treated as an external load P_k.

2.2.3

(3) **Material properties** are specified in terms of **characteristic values** which, in general, correspond to a defined fractile of the assumed distribution of the property considered (most frequently the lower 5% fractile). **Design values**

are obtained by dividing the characteristic value by an appropriate partial safety factor (γ_s for reinforcement, or γ_c for concrete).

2.3 Materials

(1) This Concise Code assumes that concrete is specified, placed and cured in accordance with ENV 206[6]. The concrete strength class should be selected from the preferred classes given in Table 2.1 below. 3.1.1

Table 2.1 Concrete strength classes and properties 3.1.2.3 3.1.2.4 3.1.2.5

	Strength class*						
	C20/25	C25/30	C30/37	C35/45	C40/50	C45/55	C50/60
f_{ck}	20	25	30	35	40	45	50
f_{ctm}	2.2	2.6	2.9	3.2	3.5	3.8	4.1
E_{cm}	29	30.5	32	33.5	35	36	37

* In the strength class of concrete (e.g. C20/25) the first number indicates the cylinder strength and the second the cube strength, both as defined in section 7.3.1.1 of ENV 206[6].

(2) Ordinary reinforcement is assumed to be in accordance with the appropriate standard, and is specified by its characteristic yield strength. 3.2.1

Two bond characteristics are recognised: 3.2.2(5)

(a) ribbed bars, resulting in high bond strength;

(b) plain bars, resulting in low bond strength.

Two ductility classes are considered: 3.2.2(4) 3.2.4.2

(a) high ductility (Class H);

(b) normal ductility (Class N).

All ribbed bars and all grade 250 bars may be assumed to be Class H. Ribbed-wire welded fabric may be assumed to be available in Class H, in sizes of 6 mm or over. Plain or indented wire welded fabric may be assumed to be available in Class N. NAD

(3) Prestressing tendons and any associated anchorages and couplers are assumed to be in accordance with the appropriate standards. 3.3.1 3.4.1

2.4 Design procedure

(1) It is envisaged that the following steps will normally be required in the design:

1. **Analyse** the structure under the design ultimate loads to obtain the design internal forces and moments (see Section **3**).
2. **Design** the critical sections so that the design internal forces and moments can be resisted (see Section **5**).
3. **Check** that the resulting design will satisfy the serviceability requirements (see Section **6**).
4. **Detail** the reinforcement (see Section **7**).

3 ANALYSIS

3.1 Definitions

(1) To be considered as a **beam** or **column**, the span or length of the member should not be less than twice the overall section depth. A beam with a span less than twice its depth is considered as a **deep beam**. 2.5.2.1

(2) To be considered as a **slab**, the minimum span should not be less than four times the overall slab thickness.

(3) For the purposes of analysis, **ribbed slabs** or **waffle slabs** may be treated as solid slabs, provided that:

(a) the rib spacing does not exceed 1500 mm;

(b) the depth of the rib below the flange does not exceed four times its width;

(c) the depth of the flange is at least one tenth of the clear distance between the ribs or 50 mm, whichever is the greater;

(d) transverse ribs are provided at a clear spacing not exceeding ten times the overall slab depth.

The minimum flange thickness of 50 mm may be reduced to 40 mm where permanent blocks are incorporated between the ribs.

(4) In the absence of a more accurate determination, the effective width of a flanged beam may be taken as: 2.5.2.2.1

(a) for a T-beam, the lesser of either the rib width plus $l_o/5$, or the actual flange width;

(b) for an L-beam, the lesser of either the rib width plus $l_o/10$, or the actual flange width;

where l_o is the distance between points of zero moment.

For the internal span of a continuous beam, l_o may be taken as 0.7 of the span and, for an end span, l_o may be taken as 0.85 of the span.

(5) The effective span of a member is given by 2.5.2.2.2

$$l_{eff} = l_n + a_1 + a_2$$

where

l_n is the clear distance between the faces of the supports

a_1 and a_2 are the distances from the face of the support to the centre of the effective support at the two ends of the member.

For a support over which the member is continuous, a_1 or a_2 is the distance from the face of the support to its centre-line.

For a simple support, a_1 or a_2 may be taken as the lesser of either the distance from the face of the support to its centreline, or one third of the overall depth of the member.

The length of an isolated cantilever may be taken as the length to the face of the support.

3.2 Methods of analysis for the ultimate limit state 2.5.3.2.2

(1) The moments and forces in the members of a framed structure may be obtained by elastic analysis.

Redistribution of the moments obtained from the elastic analysis may be carried out, provided that the rules given in Section **3.5** are satisfied.

(2) Simplifications of the structure are permitted provided that the accuracy of the results is adequate. 2.5.3.3(1)

(3) Continuous slabs and beams may be analysed on the assumption that the supports provide no rotational restraint. 2.5.3.3(3)

(4) Second-order effects are dealt with by the provisions of Section **5.5**, and may be ignored in the analysis.

(5) In general, the stiffness of members may be based on the uncracked section, ignoring the reinforcement.

(6) Plastic methods of analysis may be used for slabs, provided that they are reinforced with high-ductility steel, and that the neutral axis depth at failure does not exceed one quarter of the effective depth of the section. The ratio of the moments over continuous edges to the moments in the span should be between 1.0 and 2.0. 2.5.3.5.5 NAD

3.3 Load combinations and load patterns

(1) In the analysis for the ultimate limit state, the load combinations and partial safety factors given in Table 3.1 should be used. 2.3.3.1 2.5.4.4.1 NAD

Table 3.1 Load combinations and partial safety factors

Load combination	Permanent load		Imposed load		Wind	Prestress
	Adverse	Beneficial	Adverse	Beneficial		
1. Permanent + imposed	1.35	–	1.50	0.0	–	1.0
2. Permanent + wind	1.35	1.0	–	–	1.50	1.0
3. Permanent + imposed + wind	1.35	–	1.35	–	1.35	1.0

(2) The partial safety factor for earth and water pressures should be taken as 1.35. NAD

(3) For continuous beams and slabs, it will normally be sufficient to consider only the following arrangements of the loads: 2.5.1.2(4)

(a) alternate spans carrying the maximum design imposed and permanent load, other spans carrying the maximum design permanent load;

(b) any two adjacent spans carrying the maximum design imposed and permanent load, other spans carrying the maximum design permanent load.

(4) When considering load combination 2 in Table 3.1, the adverse and beneficial values of the permanent load should be arranged on the structure to give the worst affect.

(5) In general, the critical design moment at a continuous support, after any redistribution of the elastic moments, may be taken as that at the face of the support. In the case of rigid supports this value should not be taken as less than 65% of the support moment, calculated on the basis of the clear span, assuming the beam to be fully fixed at both ends. 2.5.3.4.2(7)

3.4 Minimum horizontal load

2.5.1.3

(1) The design horizontal load assumed to act at any floor level, should not be less than

$$H_{min} = V_j \nu \alpha_n \quad \ldots\ldots\ldots\ldots\ldots\ldots\ldots\ldots (3.1)$$

where

V_j is the total design vertical load above the level considered

2.5.1.3(3) and NAD

ν is a notional 'out of plumb' angle, in radians, given by $1/(100\sqrt{l}) \geq 1/200$, where l is the overall height of the structure, in metres

2.5.1.3.(5) and Figure 2.1

α_n is an allowance for cases where n vertically continuous elements act together, and is given by

$$\alpha_n = \sqrt{[(1+1/n)/2]}$$

(2) In a braced structure, the horizontal elements connecting the vertical elements to the bracing structure should be designed to carry an additional horizontal load equal to

$$H_{fd} = (N_{ba} + N_{bc})\, \nu/2 \quad \ldots\ldots\ldots\ldots\ldots\ldots (3.2)$$

where

N_{ba} and N_{bc} are, respectively, the design vertical loads in the vertical elements above and below the horizontal member considered.

3.5 Redistribution

2.5.3.4.2

(1) The moments calculated using an elastic analysis may be redistributed in continuous beams, where the ratio of adjacent spans is less than 2, provided that:

(a) the resulting bending moment diagrams remain in equilibrium with the design loads;

(b) the limits given in Table 3.2 are satisfied.

Table 3.2 Limits to redistribution and neutral axis depth, x

	Minimum permitted value of δ*		Maximum permitted value of x/d
	Normal ductility steel	High ductility steel	
Concrete ≤ C35/45	0.85	0.70	$0.8\delta - 0.35 \leq 0.45$
Concrete > C35/45	0.85	0.70	$0.8\delta - 0.45 \leq 0.35$

* δ is the ratio of the redistributed moment to the moment before redistribution.

4 COVER, DURABILITY AND FIRE RESISTANCE

4.1 Cover, general

4.1.3.3(1)

(1) Cover is the distance between the outer surface of the reinforcement (including links) and the nearest concrete surface.

(2) Adequate cover is required to ensure:

(a) adequate bond;

(b) fire resistance;

(c) protection of the reinforcement against corrosion.

NAD

(3) The values of cover given in this section are **nominal** values which include an allowance for tolerance. The nominal cover should not be less than the nominal maximum size of the aggregate. The actual cover should never be less than the nominal value minus 5 mm.

NAD

(4) To ensure adequate bond the nominal cover to any bar should not be less than the bar size or, in the case of pairs of bars or bundled bars, the size of an equivalent bar having the same area as the pair or bundle.

4.2 Cover and concrete quality for durability

4.1.3.3 NAD ENV 206 Table 3 National annex to ENV 206 Table NA1

(1) The nominal covers and concrete strength classes should not be less than the values given in Table 4.2 for the appropriate exposure class, except that the cover may be reduced by 5 mm for slabs in exposure classes 2 to 5. The exposure classes are defined in Table 4.1. Chemically aggressive environments are classified in ISO/DP 9690[7] , and the following equivalent conditions may be assumed:

Exposure class 5a: ISO classifications A1G, A1L, and A1S
Exposure class 5b: ISO classifications A2G, A2L, and A2S
Exposure class 5c: ISO classifications A3G, A3L, and A3S

Table 4.1 Exposure classes

Exposure class		Examples of environmental conditions
1. Dry environment		Interior of building for normal habitation or offices.
2. Humid environment	a	Interior of buildings with high humidity Exterior components Components in non-aggressive soil
	b	As a above but with exposure to frost
3. Humid environment with frost and de-icing salts		Interior and exterior components exposed to frost and de-icing agents.
4. Seawater environment	a	Components completely or partially submerged in seawater or in the splash zone Components in saturated salt air
	b	As a above but with frost
5. Aggressive chemical environment	a	Slightly aggressive chemical environment
	b	Moderately aggressive chemical environment
	c	Highly aggressive chemical environment

Table 4.2 Cover to reinforcement and concrete quality for durability

Exposure class	Nominal cover, mm				
1	20	20	20	20	20
2a	-	35	35	30	30
2b	-	-	35	30	30
3	-	-	40	35	35
4a	-	-	40	35	35
4b	-	-	40	35	35
5a	-	-	35	30	30
5b	-	-	-	30	30
5c*	-	-	-	-	45
Maximum free water/ cement ratio	0.65	0.60	0.55	0.50	0.45
Minimum cement content (kg/m^3)	260	280	300 +	300	300
Lowest concrete strength class	C25/30	C30/37	C35/45	C40/50	C45/55 or better

* Protective barrier to prevent direct contact with aggressive media should be provided.

\+ 280 kg/m^3 for exposure classes 2b and 5a.

4.3 Cover and member sizes for fire resistance

NAD

(1) The fire resistance should be determined in accordance with BS 8110: Part 2[2]. For convenience, however, the rationalised tables for cover and minimum member sizes given in BS 8110: Part 1, which are based on Part 2, have been included in this Concise Code as Tables 4.3 and 4.4. Compliance with these tables will ensure that the requirements for fire resistance are satisfied.

In some circumstances a more detailed treatment of design for fire resistance, in accordance with BS 8110: Part 2, may give economies.

BS 8110: Part 1 Table 3.5

Table 4.3 Cover to reinforcement for fire resistance

Fire resistance period, hr	Nominal cover*, mm						
	Beams		Floors		Ribs		Columns
	Simply supported	Contin-uous	Simply supported	Contin-uous	Simply supported	Contin-uous	
0.5	20	20	20	20	20	20	20
1.0	20	20	20	20	20	20	20
1.5	20	20	25	20	35	20	20
2.0	40	30	35	25	45	35	25
3.0	60	40	45	35	55	45	25
4.0	70	50	55	45	65	55	25

Notes: Where the cover exceeds 40 mm, supplementary reinforcement will be required to prevent spalling of the concrete. This situation may be avoided by adopting other special measures to enhance fire resistance (see BS 8110: Part 2).

* Cover relates to links for beams and columns, and to longitudinal bars for floors and ribs.

BS 8110: Part 1 Fig. 3.2

Table 4.4 Minimum dimensions of reinforced concrete members for fire resistance

Fire resistance period (hr)	Minimum beam width, b (mm)	Floor rib width, b (mm)	Minimum thickness of floors, h (mm)	Column width, b			Minimum wall thickness		
				Fully exposed (mm)	50% exposed (mm)	One face exposed (mm)	$p<0.4\%$ (mm)	$0.4\%<p<1\%$ (mm)	$p>1\%$ (mm)
0.5	200	125	75	150	125	100	150	100	75
1.0	200	125	95	200	160	120	150	120	75
1.5	200	125	110	250	200	140	175	140	100
2.0	200	125	125	300	200	160	–	160	100
3.0	240	150	150	400	300	200	–	200	150
4.0	280	175	170	450	350	240	–	240	180

Note 1: These minimum dimensions relate specifically to the covers given in Table 4.3.
Note 2: p is the area of steel relative to that of concrete.

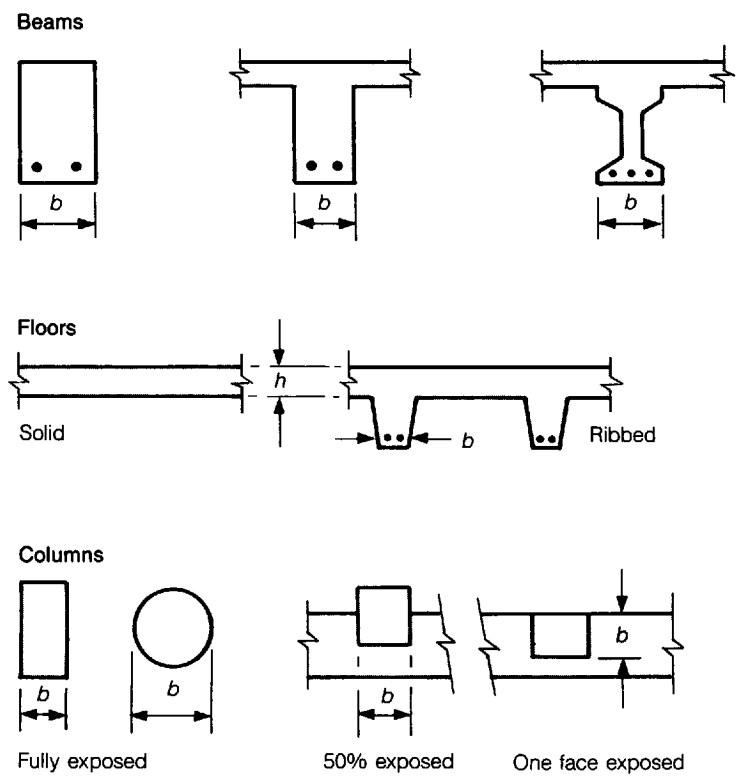

5.1 Bending and axial load

4.3.1.2

(1) The resistance of sections should be calculated, or the necessary areas of reinforcement for the ultimate limit state should be obtained, by applying the following assumptions:

(a) plane sections remain plane;

(b) the strain in bonded reinforcement, whether in tension or compression, is the same as that in the surrounding concrete;

(c) the tensile strength of the concrete is ignored;

(d) the stresses in concrete in compression are derived from the design stress block shown in Figure 5.1 (which includes $\gamma_c = 1.5$);

(e) the stresses in reinforcement are derived from the design stress-strain curve shown in Figure 5.2 (which includes $\gamma_s = 1.15$);

(f) for sections subjected to pure axial compression, the compressive strain in the concrete is limited to 0.002;

(g) for sections not fully in compression, the limiting compressive strain is taken as 0.0035. In intermediate situations the ultimate strain diagram is defined by assuming that the strain is 0.002 at a level of 3/7 of the depth of the section from the more compressed face (see Figure 5.3);

(h) Longitudinal forces may be ignored if they do not exceed $0.08f_{ck}$ times the area of the section.

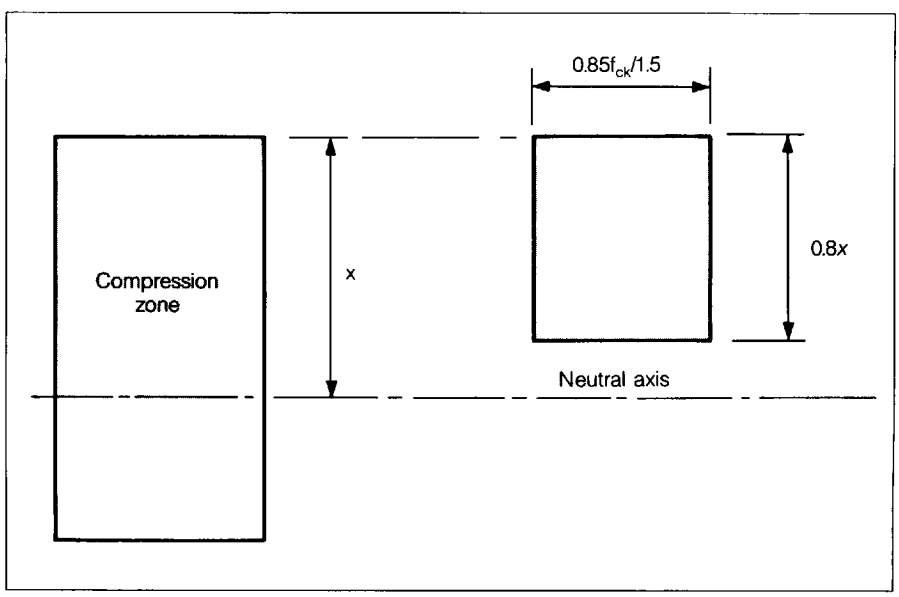

Figure 5.1 Concrete stresses at ultimate limit state

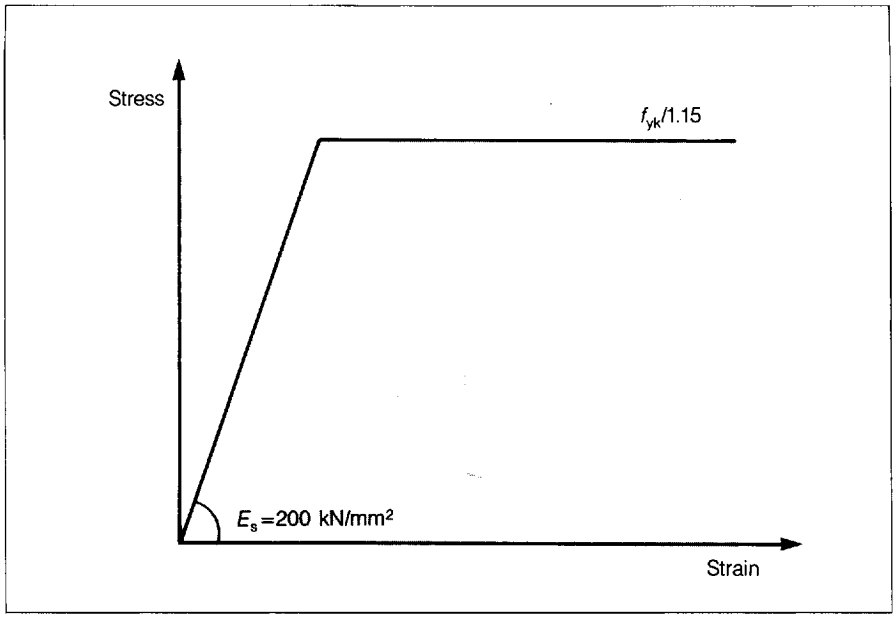

Figure 5.2 Design stress-strain curve for reinforcement.

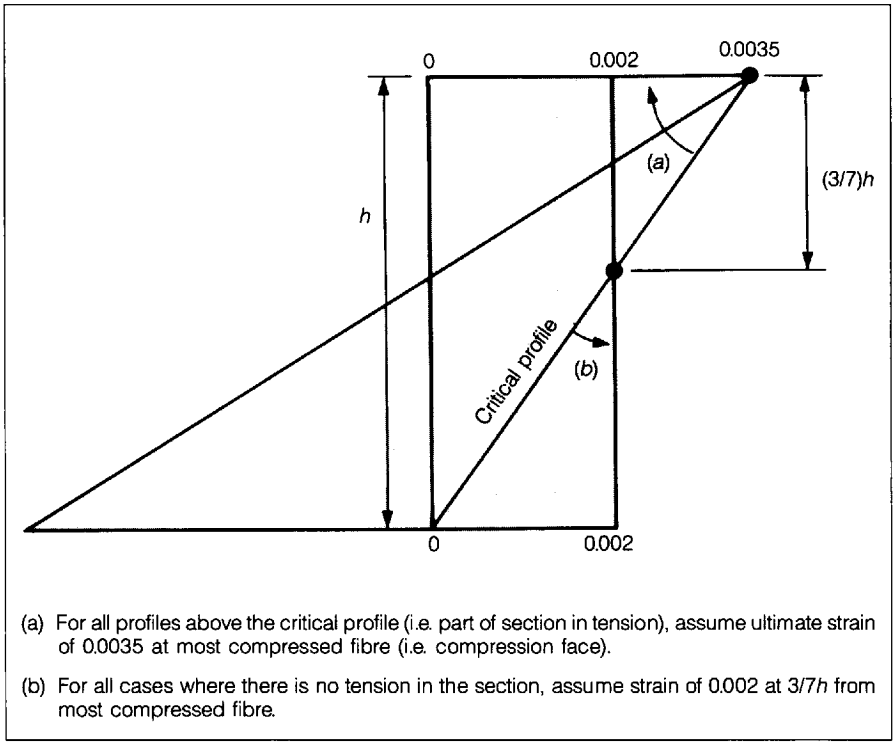

Figure 5.3 Strain distribution at the ultimate limit state

5.2 Shear resistance of beams and slabs

(1) The design of beams and slabs for shear is carried out using the following procedure. 4.3.2.2(10)

1. The critical design shear force may be taken as that acting at a distance *d* from the face of a direct support, i.e. where the loading and the support reactions are such that they cause diagonal compression in the member.

2. The maximum design shear force that can be carried by the section without shear reinforcement, V_{Rd1}, is given by 4.3.2.3

$$V_{Rd1} = [\tau_{Rd}k(1.2 + 40\,\rho_l) + 0.15\sigma_{cp}]b_w d$$

where

τ_{Rd} is the basic shear strength, and is given in Table 5.1

k is a factor allowing for the section depth.

k should be taken as 1 where $d \geq 0.6$ m, or more than 50% of the bottom reinforcement is curtailed, otherwise $k = 1.6 - d$, where d is in metres

ρ_l is the tension reinforcement ratio, $A_s/b_w d$, where A_s is the area of tension reinforcement extending not less than $d + l_{b,net}$ beyond the section considered and $l_{b,net}$ is defined in Section **7.4.2**.

ρ_l should not be taken as greater than 0.02

σ_{cp} is the design axial stress (if any) $= N_{Sd}/A_c$

b_w is the minimum width of the section

If the design shear force is less than V_{Rd1} then, for beams, only the minimum shear reinforcement given in Section **7.8.2.2** need be provided and, for slabs, no shear reinforcement is required.

Table 5.1 Values of τ_{Rd} ($\gamma_c = 1.5$ is included)

f_{ck}	20	25	30	35	≥40
τ_{Rd}	0.26	0.30	0.34	0.37	0.41

NAD

3. The maximum design shear that a section can support, V_{Rd2}, is given by

$$V_{Rd2} = 0.3\,\nu f_{ck} b_w d(1 + \cot\alpha)$$

where

$\nu = 0.7 - f_{ck}/200 \geq 0.5$

α is the angle between the shear reinforcement and the longitudinal axis of the beam. (For vertical links, alone or combined with bent-up bars, $\cot\alpha = 0$).

If the design shear exceeds V_{Rd2}, a larger section should be used.

4. Where $V_{Rd1} < V_{Sd} \leq V_{Rd2}$ 4.3.2.4.3

shear reinforcement, not less than that given in Section **7.8.2.2**, should be provided such that

$$A_{sw}/s = 1.28(V_{Sd} - V_{Rd1})/df_{yk}(1 + \cot\alpha)\sin\alpha$$

where

A_{sw} is the area of shear reinforcement within a length s
s is the spacing of the shear reinforcement

At least 50% of the required shear reinforcement should be in the form of links. ($\gamma s = 1.15$ is included in the above relationship). 5.4.2.2(4)

5.3 Torsion

4.3.3

(1) In normal slab and beam or framed construction, specific calculation for torsion will be unnecessary, as torsional cracking is adequately controlled by shear reinforcement. However when the structure relies on the torsional resistance of a member to carry the design loads, specific design for torsion will be necessary.

5.4 Punching shear

4.3.4

(1) The possibility of punching shear needs to be checked where a slab is loaded over a relatively small 'loaded area'. The most common situation is where a slab is connected to a column in flat slab construction. The loaded area is then the cross-section of the column.

(2) Where a moment may be transferred between a slab and a column, the design shear force, established from analysis of the structure, should be increased to allow for non-uniform distribution of the shear force around the perimeter of the loaded area. An appropriate effective shear force, $V_{Sd,eff}$, is obtained by multiplying the design shear force by the following factors:

internal columns	1.15;
edge columns	1.40;
corner columns	1.50.

(3) The resistance against punching shear is checked by calculating the shear capacity of a perimeter situated 1.5d away from the face of the loaded area (see Figure 5.4).

The maximum effective design shear force that can be carried by a slab without shear reinforcement, V_{Rd1}, is given by

$$V_{Rd1} = \tau_{Rd} k(1.2 + 40\rho_l)du$$

where

τ_{Rd} and k are as defined in Section **5.2**

ρ_l is the effective steel ratio, and is calculated from the reinforcement ratios in the two directions by the relation $\rho_l = \sqrt{(\rho_x \rho_y)} \leq 0.015$

d is the average effective depth in the two directions

u is the length of the perimeter.

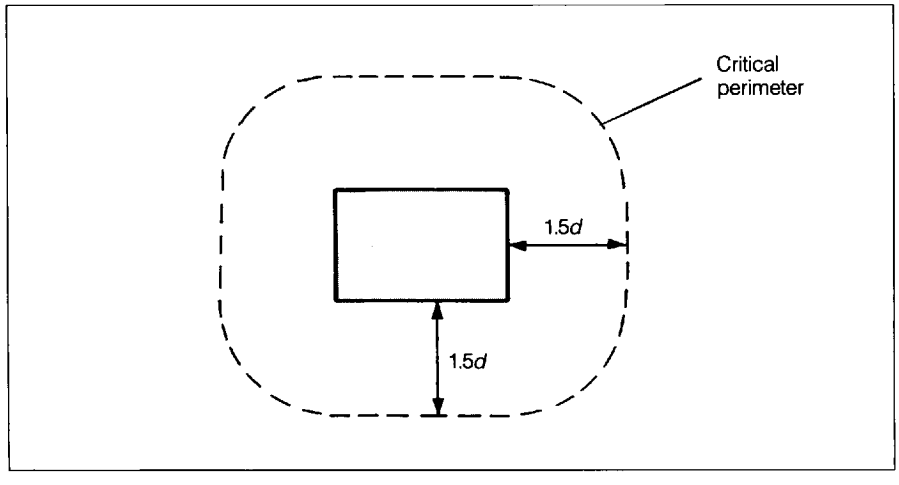

Figure 5.4 Critical perimeter for punching

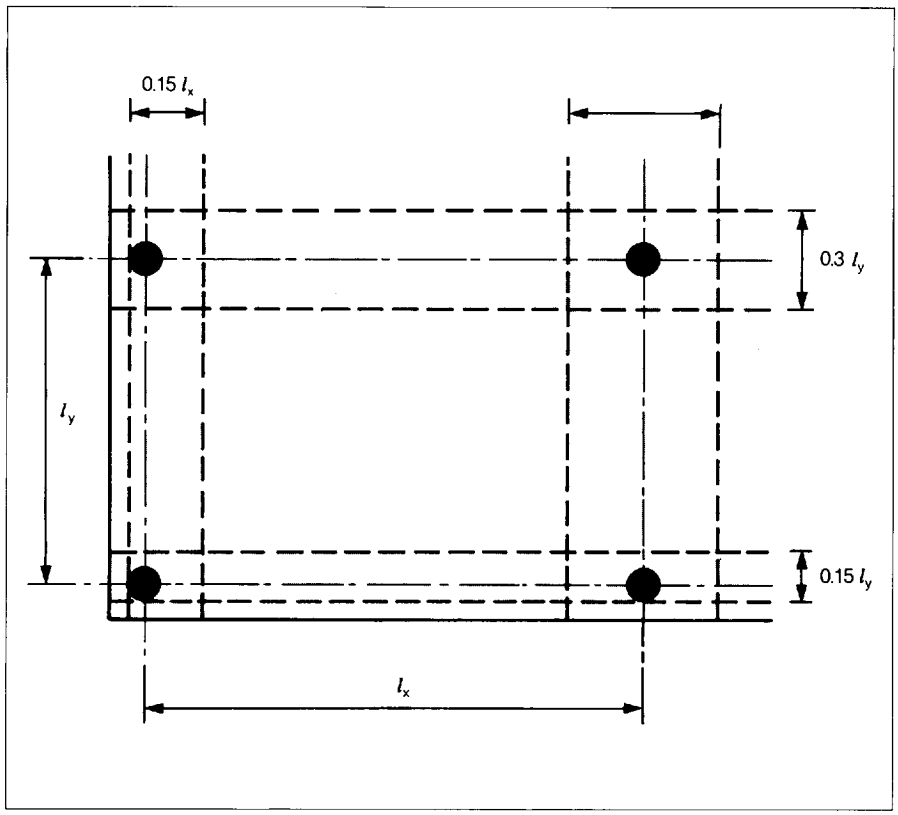

Figure 5.5 Column strip areas to be reinforced for moments from Table 5.2

(4) The maximum shear force that a slab can carry, V_{Rd2} is given by NAD

$$V_{Rd2} = 0.9u_l d\sqrt{f_{ck}}$$

where

u_l is the perimeter of the loaded area.

(5) For slabs with an overall depth of at least 200 mm: NAD

(a) Where $V_{Rd1} < V_{Sd,eff} \leq 1.6V_{Rd1}$

shear reinforcement will be required such that

$$V_{Sd,eff} - V_{Rd1} \leq 0.87A_{sw}f_{yk}\sin\alpha.$$

(b) Where $1.6v_{Rd1} < V_{Sd,eff} \leq 2V_{Rd1}$

shear reinforcement will be required such that

$$V_{Sd,eff} - 1.4V_{Rd1} \leq 0.29A_{sw}f_{yk}\sin\alpha.$$

In (a) and (b)

A_{sw} is the total area of shear reinforcement provided within the critical area; this should be fixed on at least two perimeters, the inner of which should be located $d/2$ from the face of the loaded area

α is the angle between the shear reinforcement and the plane of the slab; $\sin\alpha = 1$ for vertical reinforcement.

(6) To ensure that the calculated punching shear capacity can be achieved, the column strip areas shown in Figure 5.5 should be reinforced to support at least the minimum moments given in Table 5.2.

Table 5.2 Minimum moments for punching resistance

Case	Strip width	Total hogging moment	Total sagging moment
Internal column	$0.3l_p$	$0.0375V_{Sd}l_p$	—
Edge column perpendicular to edge	$0.3l_p$	$0.0375V_{Sd}l_p$	$0.0375V_{Sd}l_p$
parallel to edge	$0.15l_p$	$0.0375V_{Sd}l_p$	—
Corner column	$0.15l_p$	$0.075V_{Sd}l_p$	$0.075V_{Sd}l_p$

For internal columns, the strip considered is symmetrical about the centre-line of the column. For edge and corner columns, the strip is measured from the outer face of the column (see Figure 5.5).

For moments in the x direction, $l_p = l_y$

For moments in the y direction, $l_p = l_x$

5.5 Slender columns and beams

5.5.1 Scope

(1) This Concise Code covers design for the effects of slenderness of columns in braced, non-sway structures. These are structures where the lateral stability of the structure as a whole is provided by walls or other bracing, or by buttressing, capable of resisting all lateral forces without significant deflection. 4.3.5.3.1(1)

(2) The lateral buckling of slender beams is considered in Section **5.5.4**.

5.5.2 Limits to slenderness

(1) The slenderness of a column bent about a particular axis is defined by its slenderness ratio in that direction, as given by

$$\lambda = l_o / \sqrt{(I/A)}$$

where

I is the second moment of area of the section about the axis considered

A is the cross-sectional area

l_o is the effective height of the column.

(2) The effective height of a column is the height of an equivalent pin-ended strut which will be affected by slenderness to the same extent as the column considered.

Values for effective height can be obtained from the relationship 4.3.5.3.5(1)

$$l_o = \beta l_{col}$$

where

l_{col} is the height of the column between the centres of end restraints

β is a coefficient which may be obtained from Figure 5.6 as a function of the stiffnesses of the end connections.

In Figure 5.6, k_a and k_b are the ratios of the column to beam stiffnesses at the top and bottom of the column.

These are defined by the relation

$$k_a \text{ or } k_b = \Sigma(I_{col}/l_{col})/\Sigma(\alpha I_b/l_b) \geq 0.4$$

where

I_{col} and I_b are the second moments of area of the columns and beams respectively.

The summations indicate that all columns and beams framing into joint a or b should be included. The coefficient α depends on the fixity at the end of the beam remote from the joint. It takes a value of 1.0 for a continuous end and 0.5 for a simply supported end.

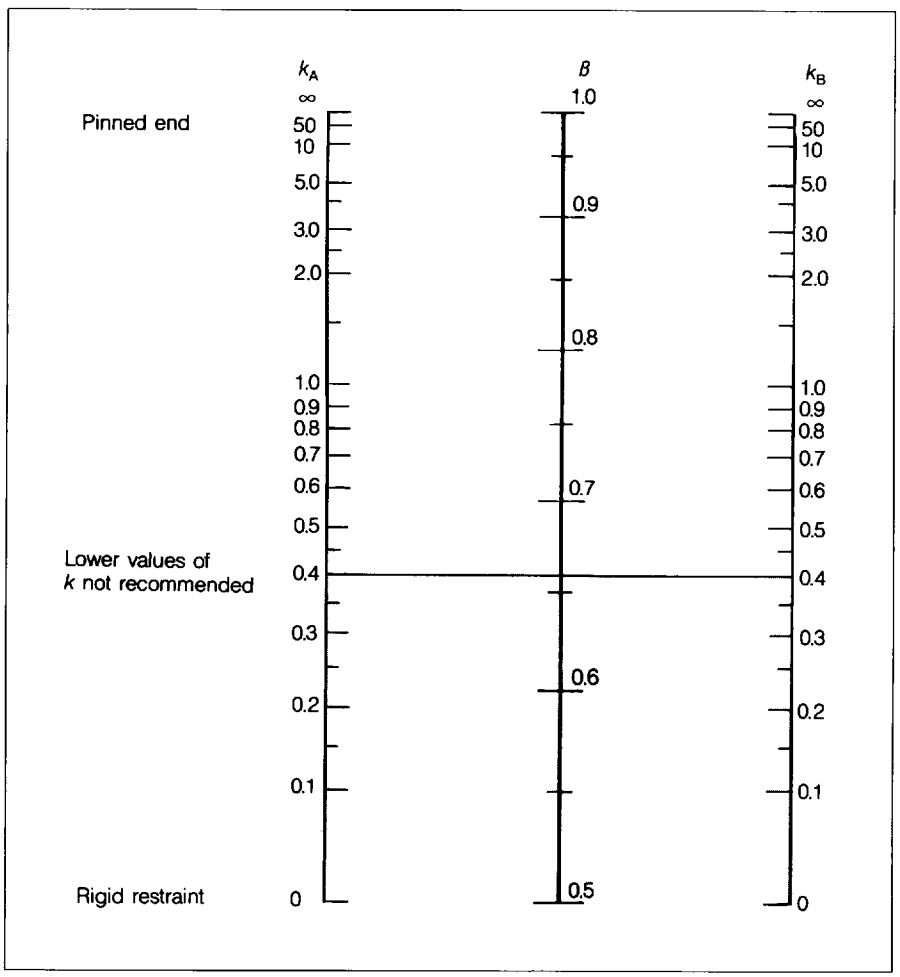

Figure 5.6 Values for effective height coefficient, β, for braced columns

(3) If $\lambda \leq \lambda_{min}$ where λ_{min} = the greater of 25 or $15/\sqrt{\nu_u}$, then the column is short and slenderness effects may be ignored. **4.3.5.3.5(2)**

$$\nu_u = N_{Sd}/(A_c f_{cd})$$

where

N_{Sd} is the design axial load on the column

A_c is the area of the cross-section.

f_{cd} is the design concrete strength = $f_{ck}/1.5$

If $\lambda_{min} < \lambda \leq \lambda_{crit}$, then it is only necessary to ensure that the design moments at the end of the column are taken as not less than $N_{Sd}h/20$.

$$\lambda_{crit} = 25(2 - M_{o1}/M_{o2})$$

where

M_{o1} and M_{o2} are the first-order moments at the two ends of the column, chosen so that $|M_{o1}| \leq |M_{o2}|$. The moments should be introduced into the formula with their correct algebraic signs.

If $\lambda_{crit} < \lambda < 140$, then specific measures are required to deal with slenderness effects.

5.5.3 Design procedure

(1) The column section should be designed to withstand the design axial load, N_{Sd}, and the greater of either the larger end moment, or a moment equal to 4.3.5.6.2

$$N_{Sd}(e_o + e_a + e_2)$$

where

e_o is the first-order eccentricity at the critical section for slenderness effects, and is given by the relation

e_o = the greater of $(0.6M_{o2} + 0.4M_{o1})/N_{Sd}$, or $0.4M_{o2}/N_{Sd}$

e_a is an accidental eccentricity equal to $\nu l_o/2$

where

ν = the greater of $1/(100\sqrt{l})$ or 1/200

l is the total height of the structure in metres.

e_2 is the second-order eccentricity calculated as indicated in Section **5.5.3(2)** below.

(2) The second-order eccentricity is an estimate of the deflection of the column at failure. It is given by the relation 4.3.5.6.3

$$e_2 = K_2 l_o^2 f_{yk}/1035000d$$

where

K_2 is a modification factor to take account of the strain conditions in the section. It may be found iteratively, taking an initial value of 1.0, and is given by

$$K_2 = (N_{ud} - N_{Sd})/(N_{ud} - N_{bal}) < 1$$

where

N_{ud} is given by $0.567f_{ck}A_c + 0.87A_s f_{yk}$

N_{bal} is given by $0.267f_{ck}A_c$ for symmetrically reinforced rectangular sections.

(3) Separate checks for slenderness effects should be made for both axes of rectangular sections. For columns bent predominantly about one axis, the first-order eccentricity, e_o, in respect of the other axis, may be taken as zero. It is not necessary to consider bi-axial bending where the eccentricity ratios, e_{oy}/b and e_{oz}/h, satisfy either of the following relationships: 4.3.5.5.3(3) 4.3.5.6.4

(a) $(e_{oz}/h)/(e_{oy}/b) \leq 0.2$; or

(b) $(e_{oz}/h)/(e_{oy}/b) \geq 5.0$.

e_{oy} and e_{oz} are the first-order eccentricities (see Section **5.5.3(1)**) for bending about the minor and major axes respectively.

(4) If the eccentricity about the major axis, e_{oz}, exceeds 0.2h, separate checks for slenderness effects may be made, only if a reduced value for the larger dimension of the column is used in the check for bending about the minor axis. For this case, the effective dimension, h', is given by

$$h' = \frac{h^2}{12(e_{oz} + e_{az})} + h/2$$

5.5.4 Lateral buckling of slender beams

4.3.5.7

The safety against lateral buckling may be assumed to be adequate if the following are satisfied:

$l_{ot} < 50b$; and

$h < 4b$

NAD

where

l_{ot} = length of the compression zone between lateral supports

b = width of the compression zone

h = total depth of the beam

5.6 Walls

(1) A **wall** is defined as a vertical loadbearing member having a length not less than four time its thickness. A **system of walls** is a group of walls that are connected monolithically so that they behave as a unit.

(2) The distribution of in-plane forces along a wall, or along the walls making up a system of walls, may be calculated by linear analysis from the design vertical and horizontal forces – but ignoring concrete in tension. Where more than one wall or system of walls resists horizontal forces, the distribution of the forces between the walls may be assumed to be in proportion to the stiffnesses of the units.

(3) Transverse moments at the tops and bottoms of the walls, arising from slabs or beams supported by the walls, should be calculated in accordance with the provisions for frame analysis set out in Section **3**.

(4) The required vertical reinforcement may be established by considering vertical strips of wall as columns subjected to the local intensity of vertical load and transverse moment, assessed in accordance with (2) and (3) above. Where appropriate, these columns should be designed to take account of slenderness effects in accordance with Section **5.5**. The design procedure is illustrated in Figure 5.7.

(5) The detailing of reinforcement in walls is covered in Section **7.8.4**.

(6) Walls acting as deep beams, or parts of walls subjected to concentrated loading, may be designed using a 'strut-and-tie' method (see Section **5.8.2**). Reference should be made to specialist literature for structures such as pierced shear walls.

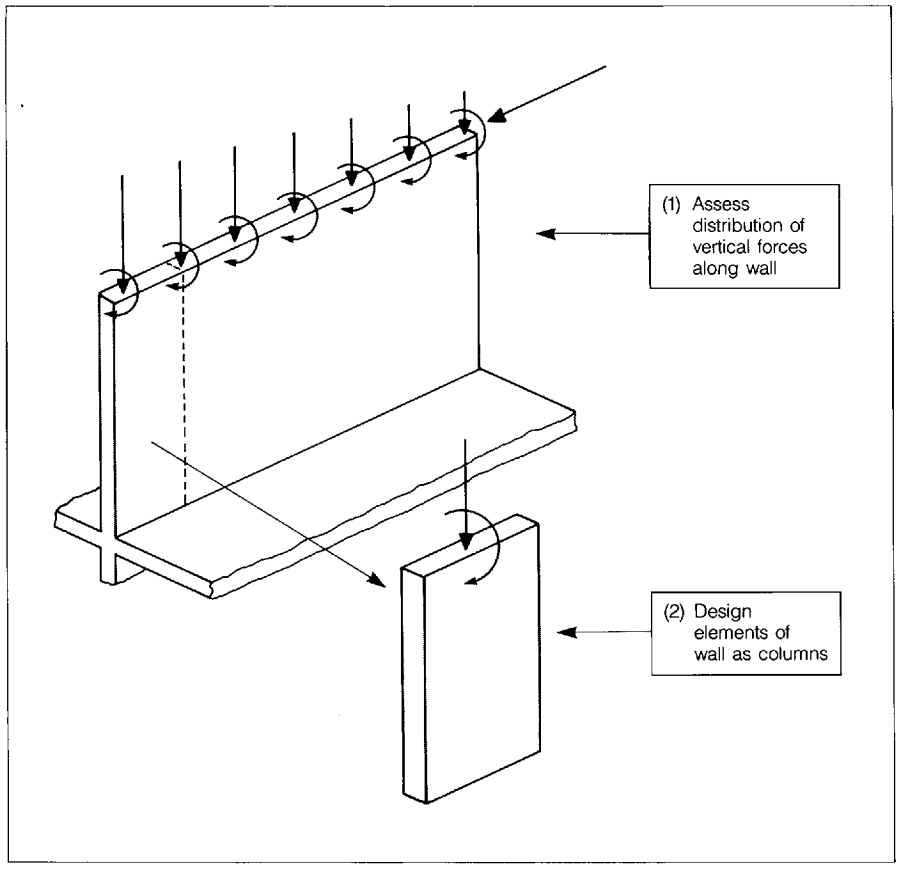

Figure 5.7 Principles for design of walls

5.7 Strut-and-tie method

2.5.3.6.3

(1) The strut-and-tie method may be used to establish an appropriate arrangement and amount of reinforcement in elements, or parts of elements, which are subjected to concentrated loads and where the assumption that plane sections remain plane is inappropriate. For example, the method may be used in the design of corbels, pile caps, deep beams and anchorage zones in prestressed beams.

(2) Elements may be idealised as statically determinate trusses consisting of straight notional struts (concrete) and ties (reinforcement). The forces in the struts and ties are established by simple statics. Sufficient reinforcement is then provided to ensure that the tension forces can be carried, a check having been made that the compressive stresses in the struts are not excessive. Care should be taken to ensure that the reinforcement forming the ties is properly anchored beyond the 'nodes' into which they frame. Local bearing stresses may also require checking in some cases.

(3) To ensure approximate compatibility, the location of the struts and ties should approximate to the distribution of internal forces that would result from an elastic analysis.

(4) The compressive stresses in the struts should not exceed $0.4f_{ck}$ and the reinforcement may be designed on the assumption that it acts at a stress of $0.87f_{yk}$.

5.8 Corbels and deep beams

5.8.1 Corbels

2.5.3.7.2

(1) Corbels where $0.4h_c \leq a_c \leq h_c$ (see Figure 5.8) may be designed using a simple strut-and-tie model. However, in addition to the vertical load, F_v, they should be designed for a minimum horizontal force, H_c, equal to $0.2F_v$.

5.4.4

(2) The reinforcement forming the tie should be fully anchored beyond the centre line of the bearing using loops or other effective anchorage.

(3) Where a corbel is not less than 300 mm deep and the area of reinforcement in the horizontal tie is at least $0.3bh_c f_{ck}/f_{yk}$ (where b is the breadth of the corbel), closed links should be provided and these should have a total area of not less than 0.4 times the area of the tie reinforcement. These links may be either horizontal or inclined but should enclose the strut.

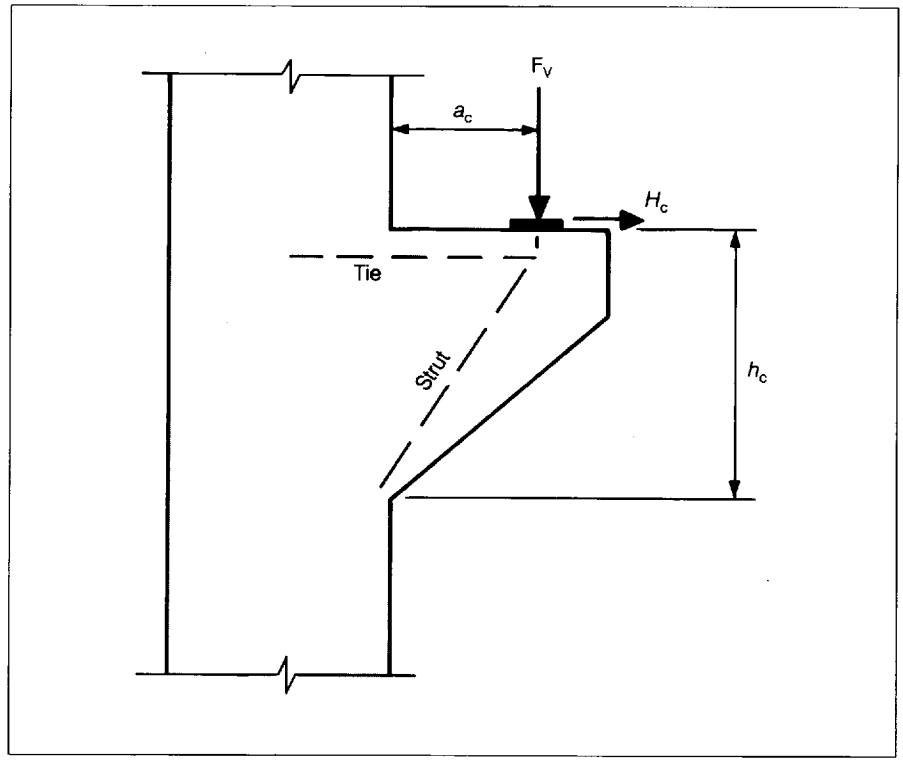

Figure 5.8 Corbel, with a strut-and-tie model

5.8.2 Deep beams

2.5.3.7.3

(1) Deep beams subjected to a concentrated load may be designed using a simple strut and tie model. For distributed loads, or more than one concentrated load, a more complex truss model may be required.

5.4.5

(2) The reinforcement forming the tie should be fully anchored beyond the support centre-line by an anchorage equal to $l_{b,net}$ (see Section **7.4.2**), or by loops or other anchorage devices.

(3) The side faces of deep beams should normally be reinforced by an orthogonal mesh with an area of 0.15% of the cross-section of the beam in both directions and in both faces.

6 SERVICEABILITY

6.1 General

(1) The common serviceability limit states are: 4.4.0.2

(a) stress limitation;

(b) control of cracking;

(c) control of deflections.

Stress limits need not be checked for reinforced concrete provided that design is carried out in accordance with this Concise Code. Stress limitations for prestressed concrete are covered in Section **8**. 4.4.1.2

6.2 Control of cracking

(1) Cracks may be limited to acceptable widths by ensuring that: 4.4.2.1(9)

(a) a minimum amount of bonded reinforcement is present, so that yield of the reinforcement does not occur immediately upon formation of the first crack.

(b) bar spacings or bar sizes are limited to the values given in Section **6.2(3)**. These limitations are not necessary for slabs where the overall depth does not exceed 200 mm. 4.4.2.3(1)

(2) The minimum area of reinforcement required for crack control may be obtained from the relation 4.4.2.2

$$A_s \geq k_c k f_{ct.ef} A_{ct} / f_{yk}$$

where

A_s is the area of bonded reinforcement within the tensile zone

A_{ct} is the area of concrete within the tensile zone. The tensile zone is that part of the section calculated to be in tension just before formation of the first crack.

$f_{ct.ef}$ is the tensile strength of the concrete effective at the time when the cracks are first expected to form. Generally this should not be less than 3 N/mm^2, unless the time of cracking can confidently be expected to be less than 28 days. In such cases a value may be obtained from Table 2.1 by taking the concrete strength class as the expected strength at the time of cracking

k_c is a coefficient which takes account of the form of the stress distribution within the section. k_c is 1.0 for pure tension and 0.4 for pure bending

k is a coefficient which allows for the effect of non-linear stress distributions within the member. Where the cause of cracking is likely to be normal loading, shrinkage, or early thermal contraction, k should generally be taken as 0.8 (but for rectangular sections with a depth greater than 800 mm, a value of 0.5 may be used). Where the cracking results from deformations imposed externally on the member by, for example, settlement of the foundation, k should be taken as 1.0.

(3) Where the minimum area of reinforcement specified in Section **6.2(2)** has been provided, crack widths generally will not normally be excessive provided that: 4.4.2.3

(a) for cracking predominantly caused by restraint of shrinkage or thermal movements, the bar sizes given in Table 6.1 are not exceeded. The steel stress should be taken as the value obtained immediately after cracking,

which may be calculated from the relation

$$f_s = (k_c k f_{ct.ef} A_{ct})/A_s$$

(b) For cracks predominantly caused by loading, either the provisions of Table 6.1 or the provisions of Table 6.2 are satisfied, together with the link spacing rules given in Table 6.3, where appropriate (i.e. where $V_{sd} > 3V_{Rd1}$).

In this case the stress used in Tables 6.1 and 6.2 should be that calculated on the basis of a cracked section under the 'quasi-permanent' load. The quasi-permanent load may be taken as the permanent load, G_k, plus a proportion of the characteristic variable load. This proportion may be taken as:

0.2 for dwellings;
0.3 for offices and stores;
0.6 for parking areas.
0.0 for snow and wind

NAD

(4) Where a beam is less than 1m deep and the cause of cracking is likely to be normal loading, the reinforcement obtained in accordance with Section **6.2(2)** and **(3)** may be provided by the main tension reinforcement. For deeper beams, additional reinforcement should be provided to control cracking on the side faces. This reinforcement should be located within the links and be evenly distributed between the main tension reinforcement and the neutral axis. The stress used in Tables 6.1 and 6.2, assuming pure tension, may be taken as half the value assessed for the main tension reinforcement.

Table 6.1 Maximum bar sizes for high bond bars

Steel stress N/mm²	Maximum bar size, mm	
	Reinforced sections	Prestressed sections
160	32	25
200	25	16
240	20	12
280	16	8
320	12	6
360	10	5
400	8	4
450	6	–

Table 6.2 Maximum bar spacings for high bond bars

Steel stress N/mm²	Maximum bar spacing, mm		
	Pure flexure	Pure tension	Prestressed sections (bending)
160	300	200	200
200	250	150	150
240	200	125	100
280	150	75	50
320	100	–	–
360	50	–	–

Table 6.3 Maximum link spacing in beams

$\frac{V_{Sd} - 3V_{Rd1}}{\rho_w b_w d}$ N/mm²	Maximum link spacing, mm
≤ 50	300
75	200
100	150
150	100
200	50

Note: See Sections **5.2(1)** for V_{Rd1} *and* **7.8.2.2(1)** for ρ_w. Also see maximum link spacing requirements in Section **7.8.2.2(2)**

6.3 Control of deflections

4.4.3.2 NAD

(1) The deflection of reinforced concrete beams or slabs in buildings will normally be satisfactory if the beams or slabs are dimensioned so that they comply with the span/effective depth ratios given in Section **6.3(2)** to **(4)** below. The limiting ratio is obtained by taking a basic ratio from Table 6.4, and multiplying it, where appropriate, by the correction factors given in **6.3(2)** below.

(2) The values in Table 6.4 need to be corrected in the following cases:

(a) for flanged sections where the ratio of the flange width to the rib width exceeds 3, the value should be multiplied by 0.8;

(b) for members, other than flat slab panels, which support partitions liable to be damaged by excessive deflection of the member, and where the span exceeds 7 m, the value should be multiplied by 7/span;

(c) for flat slabs where the greater span exceeds 8.5 m, the value should be multiplied by 8.5/span;

(d) for steel of characteristic strength other than 460 N/mm², the values should be multiplied by $460/f_{yk}$. Where more reinforcement is provided than is required for the ultimate limit state, the value may be multiplied by $A_{s,prov}/A_{s,req}$, provided that the resulting value is not greater than that for nominally reinforced concrete.

(3) If the percentage of tension reinforcement, $100A_{s,prov}/bd$, is known, then interpolation is permitted in Table 6.4 on the assumption that:

(a) 'highly stressed' corresponds to 1.5%

(b) 'lightly stressed' corresponds to 0.5%

(c) 'nominally reinforced' corresponds to 0.15%.

(4) For two-way spanning slabs (supported on beams), the check on the ratio of span to effective depth should be carried out on the shorter span. For flat slabs, the longer span should be taken.

Table 6.4 Basic ratios of span/effective depth for reinforced concrete members without axial compression (f_{yk} = 460)

Structural system	Concrete condition (reinforcement percentage)		
	Highly stressed (≥ 1.5)	Lightly stressed (0.5)	Nominally reinforced (≤ 0.15)
1. Simply supported beam One-way or two-way spanning simply supported slab	15.6	21.7	29.6
2. End span of: continuous beam; or one-way continuous slab; or two-way spanning slab continuous over one long side	20.0	27.8	38.3
3. Interior span of: beam; or one-way or two-way spanning slab	21.7	30.4	41.7
4. Slab supported on columns without beams (flat slab), based on longer span	18.3	26.1	35.7
5. Cantilever	6.1	8.7	12.2

7 DETAILING

7.1 General

5.1

(1) The rules given in this Section apply to all reinforcement in normal-weight concrete. They do not apply to structures subject to significant dynamic or fatigue loading.

7.2 General arrangement

5.2.1

(1) Cover should be in accordance with Section **4**.

(2) The clear distance (horizontal or vertical) between bars should not be less than the maximum bar size, or 20 mm. In addition, when the nominal size of aggregate, d_g, exceeds 32 mm, the distance should not be less than d_g + 5 mm.

(3) Minimum diameters for bends are shown in Tables 7.1 and 7.2.

NAD

Table 7.1 Minimum diameters of bends

	Hooks, bends, loops		Bent-up bars or other curved bars		
	Bar size		Value of minimum concrete cover, perpendicular to plane of curvature		
	ϕ <20 mm	$\phi \geq$ 20 mm	> 100 mm and >7ϕ	> 50 mm and > 3ϕ	≤ 50 mm and ≤ 3ϕ
Plain bars Grade 250	4ϕ	4ϕ	7ϕ	8.5ϕ	11.4ϕ
High bond bars Grade 460	6ϕ	8ϕ	13ϕ	15.7ϕ	20.9ϕ

Table 7.2 Minimum diameters for bends in welded mesh fabric

Minimum diameter of the mandrel	
Welds outside bends	Welds inside bends
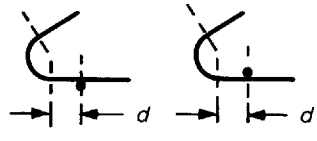	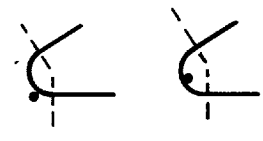
Use 20ϕ when d < 4 ϕ Table 7.1 applies when $d \geq$ 4 ϕ	20ϕ

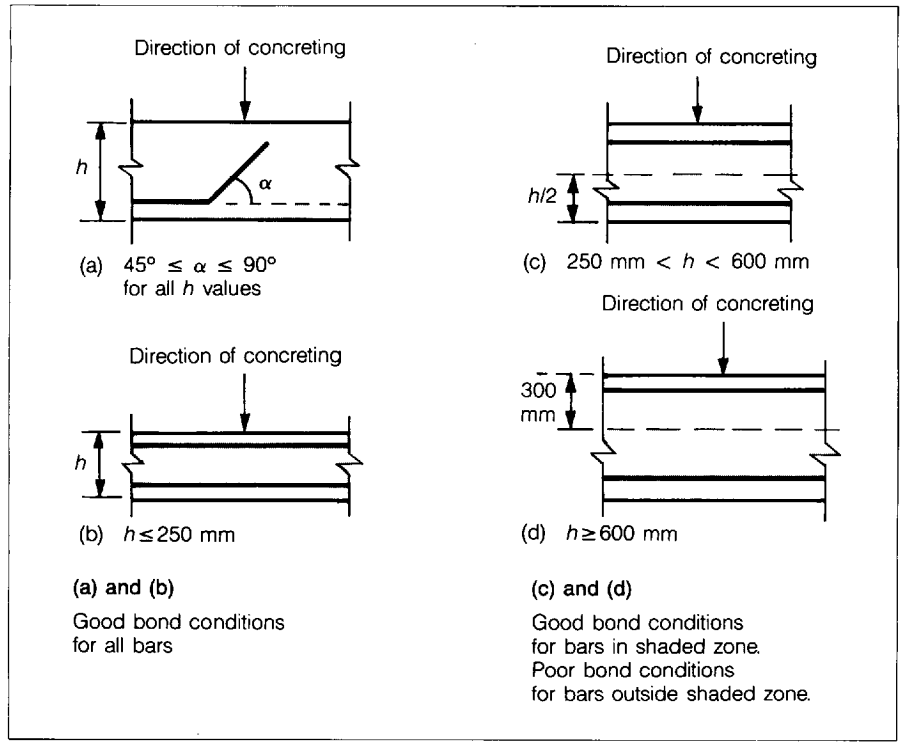

Figure 7.1 Good bond conditions

7.3 Bond

5.2.2

(1) The quality of bond depends on:

(a) the surface characteristics of the reinforcement;

(b) the dimensions of the member;

(c) the position and inclination of the reinforcement during concreting.

Good bond conditions are shown in Figure 7.1. All other conditions are considered poor.

(2) Values of design ultimate bond stress, f_{bd}, are shown in Table 7.3.

Table 7.3 Design values of f_{bd} for good bond conditions (γ_c = 1.5 is included)

	f_{ck}								
	12	16	20	25	30	35	40	45	50
Plain bars	0.9	1.0	1.1	1.2	1.3	1.4	1.5	1.6	1.7
High bond bars where $\phi \leq 32$ mm, or welded mesh fabrics made of ribbed wire	1.6	2.0	2.3	2.7	3.0	3.4	3.7	4.0	4.3

Notes: Where bond conditions are poor the values should be multiplied by 0.7.

Where a mean pressure p (N/mm^2) exists transversely to the plane of splitting, the values should be multiplied by the lesser of $1/(1 - 0.04p)$, or 1.4.

7.4 Anchorage

5.2.3

7.4.1 Anchorage methods

(1) The usual methods of anchorage are shown in Figure 7.2.

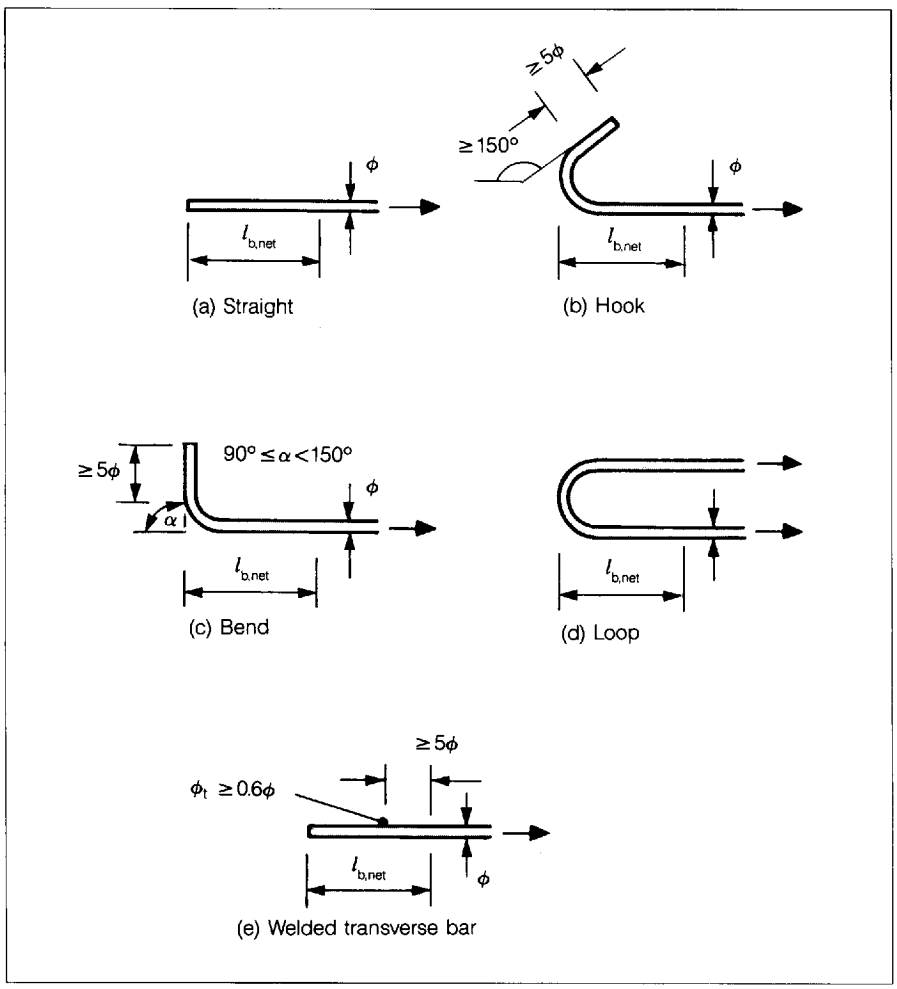

Figure 7.2 Usual methods of anchorage

7.4.2 Anchorage lengths

5.2.3.4

(1) For bars and wires, the required anchorage length is given by

$$l_{b,net} = \alpha_a l_b (A_{s,req}/A_{s,prov}) \geq l_{b,min} \quad \ldots\ldots\ldots\ldots (7.1)$$

where

α_a = 1.0 for straight bars, or
0.7 for curved bars in tension if the cover perpendicular to the plane of curvature is at least 3ϕ

l_b = $(f_{yk}/4.6\, f_{bd})\phi$, where ϕ is the size of the reinforcement and f_{bd} is the bond stress given in Table 7.3

$A_{s,req}$ and $A_{s,prov}$ are, respectively, the area of reinforcement required for the ultimate limit state, and the area provided

$l_{b,min}$ is the greatest of $0.3l_b$, 10ϕ, or 100 mm for anchorages in tension; or the greatest of $0.6l_b$, 10ϕ, or 100 mm for anchorages in compression.

Typical values for anchorage length are given in the Appendix, Tables A10 and A11.

(2) For welded mesh fabric made of high bond wires, the anchorage length may be obtained from Equation 7.1. If welded transverse bars are present in the anchorage, the value obtained from Equation 7.1 may be multiplied by 0.7.

(3) Welded mesh fabric made of smooth wires may be used, subject to relevant standards.

7.4.3 Transverse reinforcement

5.2.3.3

(1) Transverse reinforcement should be provided for:

(a) anchorages in tension, if there is no transverse compression caused by support reactions;

(b) all anchorages in compression.

(2) The minimum total area of transverse reinforcement required within the anchorage length is 25% of the area of one anchored bar (see Figure 7.3)

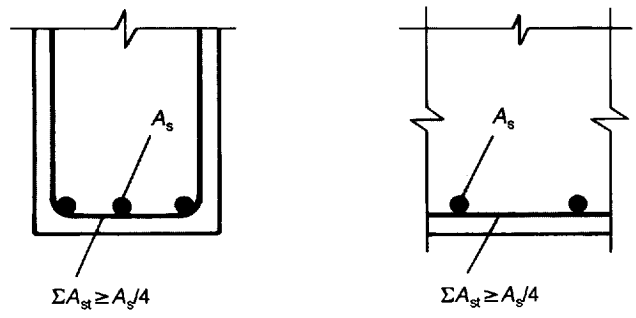

Figure 7.3 Transverse reinforcement in anchorage length

(3) In tension anchorages, the transverse reinforcement should be evenly distributed along the anchorage length, with at least one bar placed in the region of a hook, bend or loop.

(4) In compression anchorages, the transverse reinforcement should surround the bars and be concentrated at the end of the anchorage.

7.4.4 Anchorage of links

5.2.5

NAD

(1) Links and shear reinforcement may be anchored using one of the methods shown in Figure 7.4. A bar should be provided inside a hook or bend.

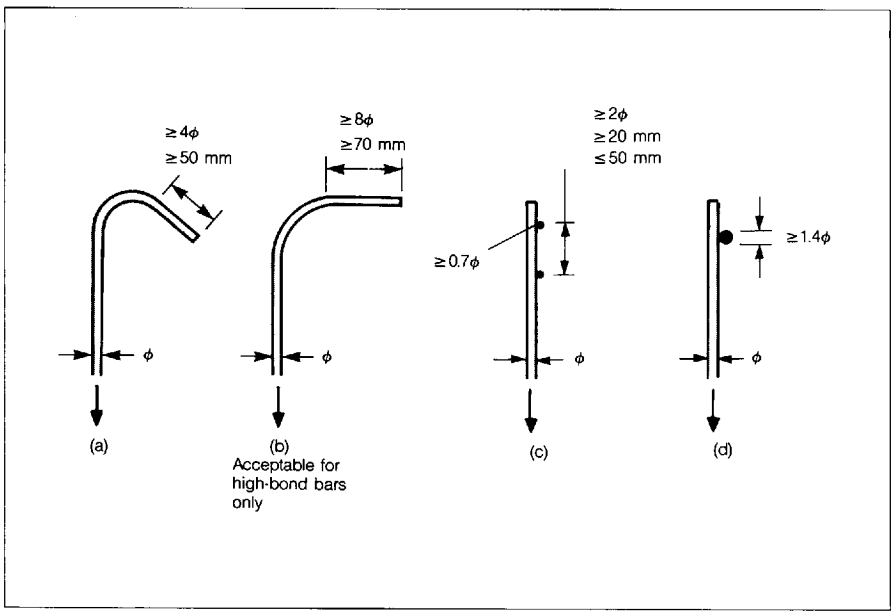

Figure 7.4 Anchorage of links

7.5 Laps

5.2.4

7.5.1 General

(1) Laps shall be detailed such that forces are transmitted from one bar to the next without causing cracking or spalling of the concrete. Wherever possible, laps between bars should be staggered and should not be located at sections of high stress. The spacing between lapped bars, and between adjacent laps, should comply with Figure 7.5.

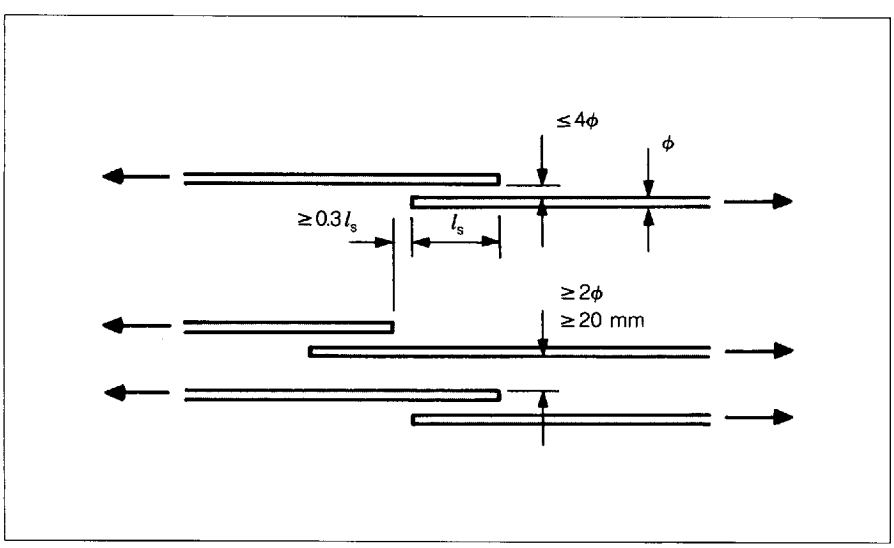

Figure 7.5 Arrangement of bars at laps

7.5.2 Lap lengths for bars and wires

5.2.4.1

(1) The required lap length is given by

$$l_s = \alpha_1 l_{b,net} \geq l_{s,min} \quad \text{(7.2)}$$

where

α_1 = 1.0 for compression laps

α_1 = 1.0 for tension laps, where fewer than 30% of the bars at a section are lapped; *and* with reference to Figure 7.6, $a \geq 6\phi$ and $b \geq 2\phi$

α_1 = 1.4 for tension laps in which either;

(i) 30% or more of the bars at a section are lapped, *or*

(ii) with reference to Figure 7.6, $a < 6\phi$ *or* $b < 2\phi$

α_1 = 2.0 for tension laps where both (i) and (ii) above are satisfied

$l_{b,net}$ is obtained from Equation 7.1

$l_{s,min}$ is the greatest of $0.3\alpha_a\alpha_1 l_b$, 15ϕ, or 200 mm, where α_a and l_b are calculated in accordance with Section **7.4.2**.

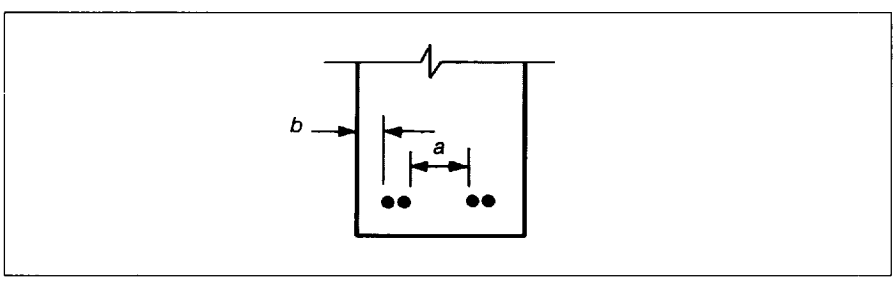

Figure 7.6 Distances for evaluation of α_1 in Equation 7.2

7.5.3 Transverse reinforcement

(1) No special transverse reinforcement is required when either:

(a) the size of the lapped bars is less than 16 mm; or

(b) fewer than 20% of the bars in the section are lapped.

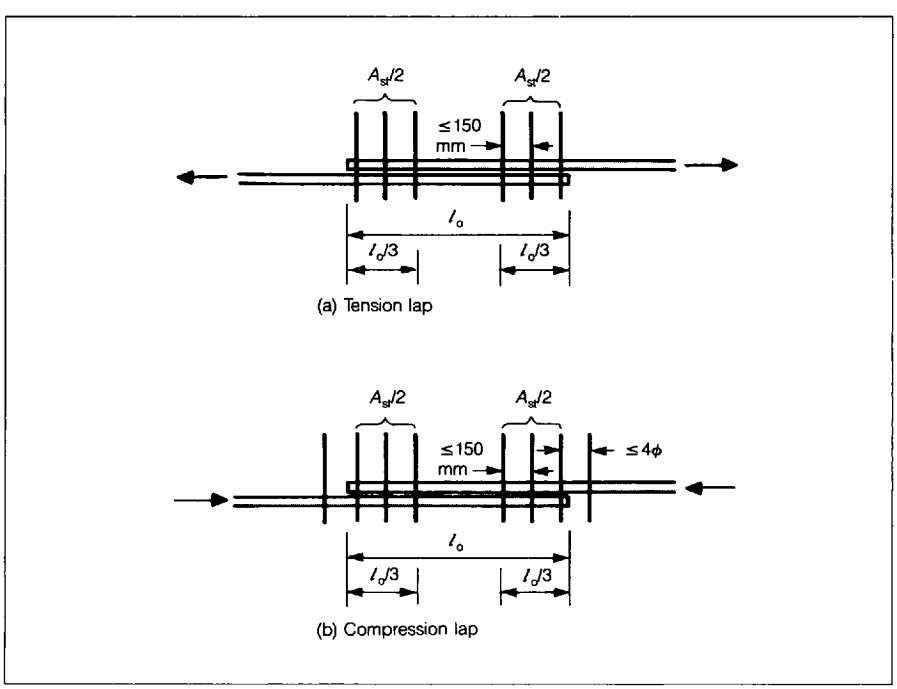

Figure 7.7 Transverse reinforcement at laps

(2) If ϕ (of the lapped bars) $\geq$ 16 mm then transverse reinforcement, placed between the longitudinal reinforcement and the concrete surface, should be provided as shown in Figure 7.7. When in Figure 7.6, $a \leq 10\phi$, the transverse reinforcement should be in the form of links in beams. The total area of transverse reinforcement, A_{st}, should be not less than the area of the lapped bar.

7.5.4 Laps for welded mesh fabric made of high bond wires

5.2.4.2

(1) Guidance given here is limited to laps made by layering of the sheets.

(2) The maximum percentage of the main reinforcement that may be lapped at one section is:

(a) 100% if $A_s/s \leq 1200$ mm^2/m; or

(b) 60% if $A_s/s > 1200$ mm^2/m, and this mesh is an interior layer of a multiple layer.

(3) Lap length, l_o is given by

$$l_o = \alpha_2 l_b A_{s,req}/A_{s,prov} \geq l_{o,min}$$

where

$\alpha_2 = 0.4 + (A_s/s)/800$ and $1.0 \leq \alpha_l \leq 2.0$

l_b is calculated in accordance with Section **7.4.2**

$l_{o,min} = 0.3\alpha_2 l_b \geq 200$mm
$\geq$ spacing of transverse wires.

(4) All transverse reinforcement may be lapped at the same location. At least two longitudinal wires should be within the lap length.

Recommended lap lengths in the transverse direction are as shown in Table 7.4.

Table 7.4 Recommended lap lengths in the transverse direction

	Size of wires, mm		
	$\phi \leq 6$	$6 < \phi \leq 8.5$	$8.5 < \phi \leq 12$
High bond wires	$\geq s_l$* ≥ 150	$\geq s_l$ ≥ 250	$\geq s_l$ ≥ 350

*s_l is the spacing of longitudinal wires

7.6 Additional rules for high-bond bars over 32 mm in size

5.2.6

7.6.1 General

(1) The minimum depth of the element should not be less than 15ϕ.

For crack control, surface reinforcement should be used (see Section **7.8.2.3**).

7.6.2 Bond

(1) The values of f_{bd} given in Table 7.3 should be multiplied by $(132 - \phi)/100$, where ϕ is in mm.

7.6.3 Anchorages and joints

(1) Bars should be anchored as straight bars or by means of mechanical devices. They should not be anchored in tension zones.

(2) In the absence of transverse compression, additional transverse reinforcement should be provided as shown in Figure 7.8. The areas of the bars are given by:

$$A_{st} = n_1 \times 0.25A_s$$

$$A_{sv} = n_2 \times 0.25A_s$$

where

A_s is the cross-sectional area of an anchored bar

n_1 is the number of layers with bars anchored at the same point

n_2 is the number of bars anchored in each layer.

The additional transverse bars should be distributed uniformly in the anchorage zone with their spacing not exceeding 5ϕ.

(3) Lapped joints should not be used.

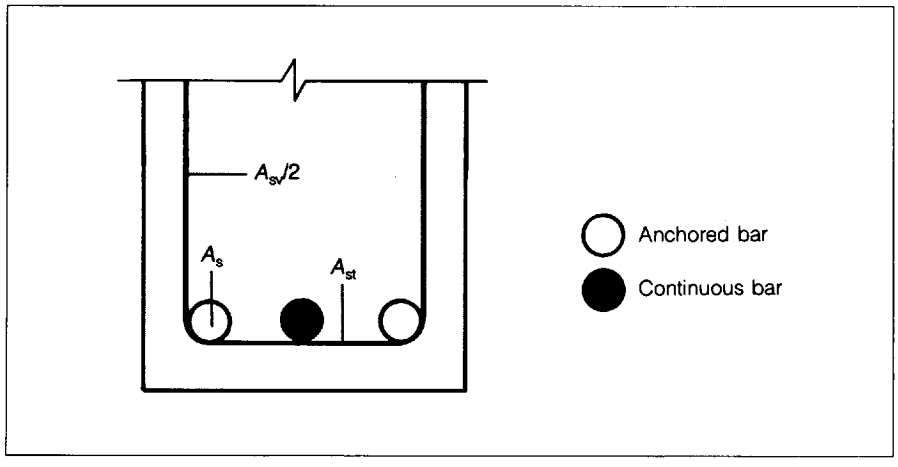

Figure 7.8 Additional reinforcement in anchorage zone

7.7 Bundled bars

5.2.7

(1) Bars of the same size and characteristics may be bundled. The rules for individual bars apply to the bundle.

(2) In design, the equivalent size of the bundle, ϕ_n, should be used. This is given by

$$\phi_n = \phi\sqrt{n_b} \leq 55 \quad \text{.....(7.3)}$$

where

n_b is the number of bars in a bundle and is limited to:

(a) four for vertical bars in compression and at laps;

(b) three for all other cases.

(3) Clear distances and concrete cover should be measured from the external contour of the bundle.

(4) Bars should be anchored or lapped one at a time. Anchorage or lap lengths for individual bars should be staggered by at least 1.2, 1.3 and 1.4 times the anchorage or lap length for bundles of two, three and four bars respectively.

7.8 Structural members

7.8.1 Columns

5.4.1

7.8.1.1 Minimum dimensions

(1) The minimum transverse dimensions are 200 mm when cast vertically, and 140 mm when cast horizontally.

7.8.1.2 Longitudinal reinforcement

(1) The minimum longitudinal reinforcement is given by

$$A_{s,min} = 0.15N_{Sd}/0.87f_{yk} \geq 0.003A_c$$

where

N_{Sd} is the axial compression force

A_c is the area of the cross-section.

(2) The area of reinforcement should not exceed $0.08A_c$ anywhere, including laps.

(3) The bar size should not be less than 12 mm. At least one bar should be placed at each corner and circular columns should have at least six bars.

7.8.1.3 Transverse reinforcement

(1) Transverse reinforcement should not be less than 6 mm, or one quarter the size of the largest longitudinal bar, whichever is the greater.

(2) The spacing of transverse reinforcement should not exceed any of the following:

(a) 12 times the size of the smallest longitudinal bar; or

(b) the smallest lateral dimension of the column; or

(c) 300 mm.

(3) The spacing should be reduced by a factor of 0.67: NAD

(a) for a distance equal to the larger lateral dimension of the column above and below a beam or a slab; and

(b) at lapped joints of longitudinal bars > 20 mm size. NAD

(4) One set of transverse reinforcement is deemed to secure a maximum of five bars in, or close to, each corner.

7.8.2 Beams

5.4.2

7.8.2.1 Longitudinal reinforcement

(1) The area of longitudinal tension reinforcement should not be less than

$$0.6\ b_t d/f_{yk} \geq 0.0015 b_t d$$

where

b_t is the mean width of the tension zone.

Note that the minimum reinforcement provision for crack control, given in Section **6.2**, may also need to be satisfied.

(2) Other than at laps, the area of tension or compression reinforcement should not exceed $0.04A_c$.

(3) In monolithic construction, even where simple support has been assumed, partial fixity of at least 25% of the maximum span moment should be allowed for in the design.

(4) In flanged beams, when the flange is in tension, the reinforcement may be distributed over a width of 2 times rib width for a T-beam and 1.5 times rib width for an L-beam.

(5) Any curtailed reinforcement should be provided with an anchorage length, $l_{b,net} \geq d$, from the point where it is no longer needed. This should be determined taking into account both the tension caused by the bending moment and that implied in the truss analogy used for shear design. This can be done by shifting the theoretical point of cut-off, based on the bending moment, by $0.45d$ in the direction of decreasing moment.

(6) The anchorage length of any bent-up bars which contribute to the shear resistance should be not less than $1.3l_{b,net}$ in the tension zone, and $0.7l_{b,net}$ in the compression zone.

(7) At least one quarter of the bottom reinforcement in the span should extend to the supports.

(8) At an end support where there is little or no fixity, the bottom reinforcement should be capable of resisting a force of $0.5V_{Sd}$ in addition to any axial tensile force.

(9) The anchorage length to be provided at an end support is shown in Figure 7.9, where $l_{b,net}$ may be calculated by taking $A_{s,req}$ as one quarter of the bottom reinforcement in the span, but not less than that required by condition (8) above.

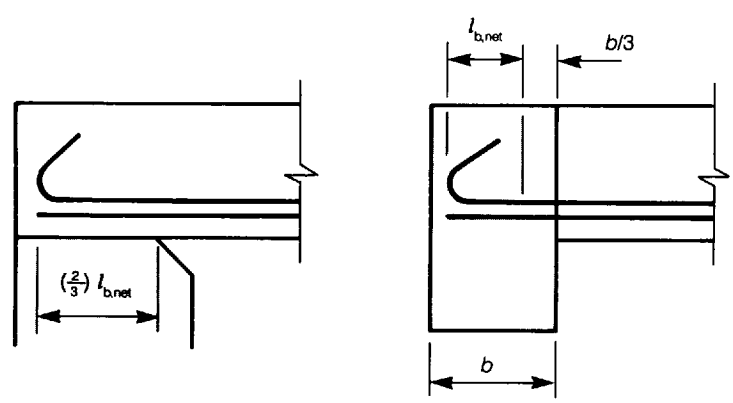

(a) Direct support (b) Indirect support

Figure 7.9 Anchorage of bottom reinforcement at end supports

(10) At an intermediate support, the bottom reinforcement should extend 10ϕ beyond the face of the support. It is advisable to provide splicing bars across the support, lapping $l_{b,net}$ on each side, to provide resistance to accidental positive moments.

7.8.2.2 Shear reinforcement

(1) The shear reinforcement ratio, ρ_w, is given by

$$\rho_w = A_{sw}/sb_w \sin\alpha$$

where

A_{sw} is the area of shear reinforcement within a length s

s is the spacing of the shear reinforcement

b_w is the breadth of the web of the member

α is the angle between the shear reinforcement and the longitudinal axis of the member.

The minimum values of ρ_w are given in Table 7.5. The size of shear reinforcement should not exceed 12 mm, when it consists of plain round bars.

Table 7.5 Minimum values of ρ_w

Concrete strength class	Steel grade	
	250	460
C12/15 and C20/25	0.0015	0.0008
C25/30 to C35/45	0.0022	0.0012
C40/50 to C50/60	0.0028	0.0014

(2) The longitudinal spacing of shear links should not exceed the smaller of:

(a) $0.8d$ or 300 mm, if $V_{Sd} \leq (\frac{1}{5})\ V_{Rd2}$;

(b) $0.6d$ or 300 mm, if $(\frac{1}{5})\ V_{Rd2} < V_{Sd} \leq (\frac{2}{3})\ V_{Rd2}$;

(c) $0.3d$ or 200 mm, if $V_{Sd} > (\frac{2}{3})\ V_{Rd2}$.

The longitudinal spacing of bent-up bars should not exceed $0.6d(1 + \cot\alpha)$

(3) The transverse spacing of the legs of shear links should not exceed:

(a) d or 800 mm, if $V_{Sd} \leq (\frac{1}{5})\ V_{Rd2}$;

(b) $0.6d$ or 300 mm, if $(\frac{1}{5})\ V_{Rd2} < V_{Sd} \leq (\frac{2}{3})\ V_{Rd2}$;

(c) $0.3d$ or 200 mm, if $V_{Sd} > (\frac{2}{3})\ V_{Rd2}$.

7.8.2.3 Surface (skin) reinforcement

(1) Surface reinforcement should be provided where bundled bars or bar sizes greater than 32 mm are used.

This should consist of welded mesh or small size high bond bars placed outside the links, as shown in Figure 7.10, and should comply with the cover requirements given in Section **4.2**.

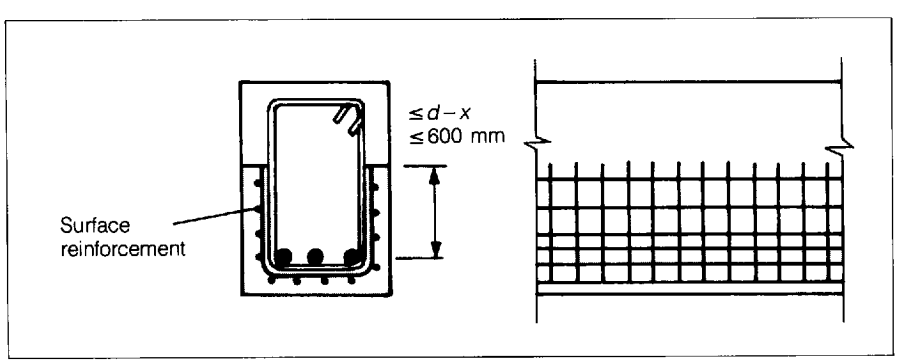

Figure 7.10 Surface reinforcement

(2) The area of surface reinforcement in the longitudinal direction should not be less than 1% of the area of concrete in the tension zone external to the links, as shown in Figure 7.10. The spacing of the reinforcement should not be greater than 150 mm.

7.8.3 Solid slabs

5.4.3

7.8.3.1 Thickness

(1) The thickness of the slab should not be less than 50 mm.

7.8.3.2 Main reinforcement

(1) Sections **7.8.2.1(1)** to **(10)** apply except that in **7.8.2.1(5)** the theoretical point of cut-off should be shifted by d instead of $0.45d$.

(2) Bar spacing should not exceed the lesser of $3h$ or 500 mm, where h is the overall depth of the slab. NAD

(3) Half the span reinforcement should be continued up to the supports and anchored therein.

7.8.3.3 Secondary reinforcement

(1) The cross-sectional area should not be less than 20% of the main reinforcement.

(2) Bar spacing should not exceed the lesser of $3h$ or 500 mm. NAD

7.8.3.4 Shear reinforcement

(1) The minimum depth of slab in which shear reinforcement may be provided is 200 mm.

(2) Sections **7.8.2.2(1)** to **(3)** apply, except that the longitudinal spacing of shear links should not exceed $0.75d$. NAD

7.8.4 Walls

5.4.7

(1) Walls subjected predominantly to out-of-plane bending should be detailed as slabs.

(2) The minimum area of vertical reinforcement should be $0.004A_c$ and the maximum area should be $0.04A_c$.

(3) The spacing between vertical bars should not exceed twice the wall thickness or 300 mm, whichever is smaller.

(4) Horizontal reinforcement should be placed between the vertical reinforcement and the concrete surface. The area should not be less than 50% of the vertical reinforcement. The size of horizontal bars should not be less than one quarter of that of the vertical bars. The spacing between horizontal bars should not exceed 300 mm.

(5) Where vertical reinforcement in excess of $0.02A_c$ is required to carry loads, the reinforcement should be enclosed by links, as for columns (see Section **7.8.1**).

7.8.5 Indirect supports

5.4.8.3

(1) Suspension reinforcement, in the form of links, should be provided to resist the total reaction between a supporting and a supported beam. The reinforcement may be distributed within the zone shown in Figure 7.11.

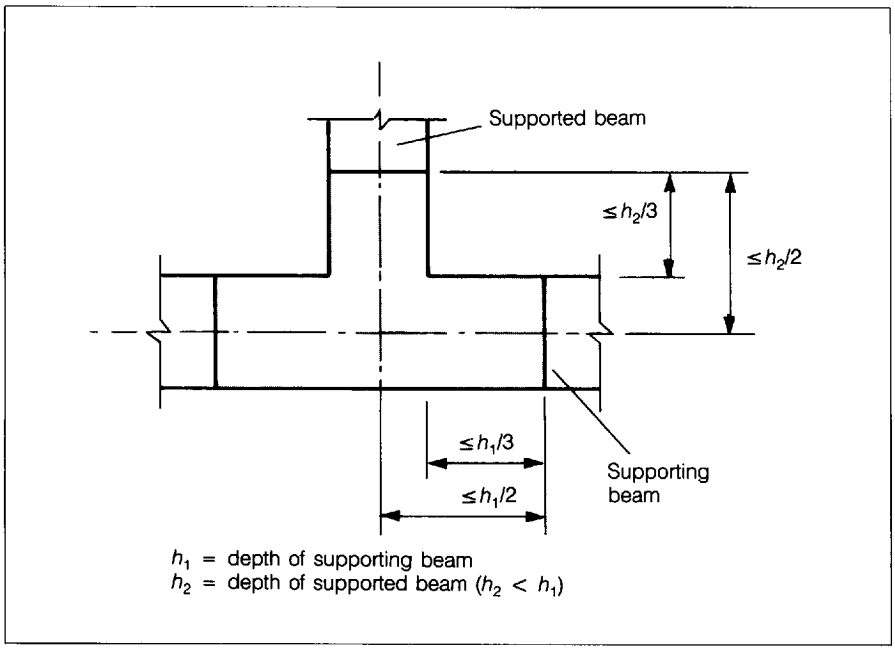

Figure 7.11 Extent of intersection zone at indirect support

7.9 Limitation of damage caused by accidental loads

5.5

(1) Ties may be provided to prevent local damage caused by accidental loads, and to provide alternative load paths should local damage occur.

(2) The structure should be tied together using peripheral, internal and vertical ties. Such tying should be provided in each section between movement joints.

NAD

(3) The ties should be designed in accordance with Clauses 3.12.3 and 5.1.8 of BS 8110: Part 1, and Clause 2.6 of BS 8110: Part 2.

(4) In design, the reinforcement may be assumed to act at its characteristic strength.

(5) All ties should be continuous between the boundaries of the building structure.

8 PRESTRESSED CONCRETE

8.1 Scope

(1) The guidance given here is limited to structures in normal weight concrete where prestress is provided by fully bonded internal tendons.

8.2 Partial safety factors

(1) The partial safety factor, γ_p, applied to the prestressing force, may generally be taken as 1.0, but see Section **8.9(1)**.

8.3 Material properties

8.3.1 Concrete

(1) The minimum strength classes of concrete are:

(a) C25/30 for post-tensioned work;

(b) C30/37 for pre-tensioned work.

The lowest concrete grade for durability is C30/37 for exposure classes 1 and 2a. For other conditions of exposure, the grades given in Table 4.2 apply.

Properties of concrete are as noted in Section **2.3(1)** .

8.3.2 Prestressing steel

(1) The stress-strain diagram shown in Figure 8.1, which includes γ_s = 1.15, may be used.

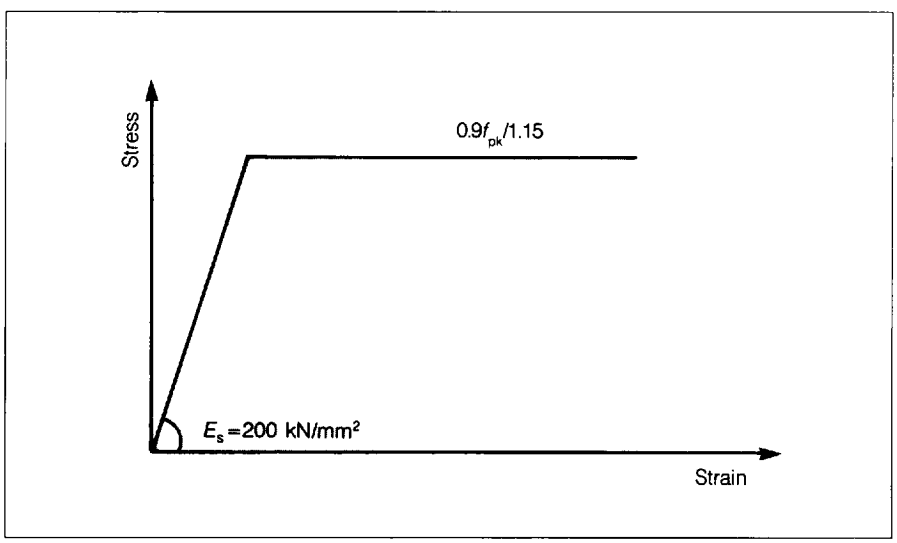

Figure 8.1 Design stress – strain diagram for prestressing steel

8.4 Minimum number of bars, wires, or tendons in isolated members

(1) A minimum number of bars, wires, or tendons is required to prevent the collapse of isolated members should some bars, wires or tendons fail.

(2) This requirement applies only to isolated, statically determinate members where no additional load-carrying capacity exists through redistribution of internal forces and moments, transverse redistribution of loads, or other means.

(3) The requirement is deemed to be satisfied if:

(a) Table 8.1 is complied with; or

(b) at least one strand of seven or more wires, each of not less than 4 mm size, is provided.

Table 8.1 Minimum number of bars, wires, or tendons in isolated members

Type	Minimum number
Individual bars and wires	3
Bars and wires forming a strand or tendon	7
Tendons, except strands (see Section **8.4(3)**)	3

8.5 Initial prestressing force

4.2.3.5.4

(1) The maximum tendon force (i.e. the force at the active end immediately after stressing) is given by

$$P_o = A_p \sigma_{o,max}$$

where

A_p is the cross-sectional area of the tendon, and $\sigma_{o,max}$ should not exceed the lesser of $0.8f_{pk}$ or $0.9f_{p0.1,k}$

(2) The prestressing force applied to the concrete immediately after tensioning (post-tensioning) or after transfer (pre-tensioning) is given by

$$P_{m,o} = A_p \sigma_{pm,o}$$

where

$\sigma_{pm,o}$ should not exceed the lesser of $0.75\ f_{pk}$ or $0.85f_{p0.1,k}$

(3) The prestressing force in 8.5(2) above should be calculated allowing for losses caused by:

(a) friction (if applicable), short-term relaxation, and elastic shortening – for pre-tensioned members; and

(b) duct friction, anchorage slip, and elastic shortening – for post-tensioned members.

8.6 Loss of prestress

4.2.3.5.5

(1) The mean effective prestressing force, $P_{m,t}$, is the initial force at the active end of the tendon, less the relevant losses. Whenever possible the calculation of the losses should be based on experience and data relating to the materials and methods used. In the absence of more accurate data, the guidance given in this section may be used.

(2) **Anchorage slip** should be determined in accordance with technical approval documents relating to the prestressing system to be used.

(3) **Elastic shortening** may be based on the modulus of elasticity of the concrete, E_{cm}, given in Table 2.1, where f_{ck} is taken as the concrete strength at transfer.

For pre-tensioning, the loss of prestress should be taken as the product of the modular ratio and the stress in the concrete adjacent to the tendon.

For post-tensioning, where tendons are stressed sequentially, the loss may be taken as half the product of the modular ratio and the stress in the concrete adjacent to the tendon, averaged along the length of the tendon.

(4) **Friction**. The loss of prestress at a distance x from the active end of the tendon may be obtained from

$$\Delta P_{\mu}(x) = P_o[1 - e^{-\mu(\theta + kx)}]$$

where

μ is the coefficient of friction between the tendons and their ducts

θ is the sum of the angular displacements (irrespective of sign) over the length x

k is an unintentional angular displacement per unit length related to the profile of the tendons.

For tendons which fill about 50% of the duct, the following values of μ may be assumed:

Cold drawn wire	0.17
Strand	0.19
Smooth round bar	0.33
Deformed bar	0.65

The value for k should be given in the technical documents relating to the particular system used and will generally be in the range 0.005 to 0.01 radians per metre.

(5) **Creep of concrete**. Where concrete is subjected to a compressive stress not exceeding $0.45f_{ck}$ at first loading, the final creep coefficients ϕ (∞, t_o) given in Table 8.2 may be used. These values may be multiplied by 0.7 where the fresh concrete is of stiff consistency (class S1 in Clause 7.2.1 of ENV 206). 3.1.2.5.5

Table 8.2 Final creep coefficient of normal weight concrete

Age at loading (t_o) days	Dry conditions (inside, r.h. = 50%)			Humid conditions (outside, r.h. = 80%)		
	Notional size ($2A_c/u$), mm			Notional size ($2A_c/u$), mm		
	50	150	600	50	150	600
1	5.4	4.4	3.6	3.5	3.0	2.6
7	3.9	3.2	2.5	2.5	2.1	1.9
28	3.2	2.5	2.0	1.9	1.7	1.5
90	2.6	2.1	1.6	1.6	1.4	1.2
365	2.0	1.6	1.2	1.2	1.0	1.0

Notes: A_c is the cross-sectional area of concrete, u is the perimeter of that area.
Table valid between −20°C and 40°C.
Linear interpolation between the values in this table is permitted.

(6) **Shrinkage of concrete**. The final shrinkage strains shown in Table 8.3 may be used. These values may be multiplied by 0.7 where the fresh concrete is of stiff consistency (class S1 in Clause 7.2.1 of ENV 206). 3.1.2.5.5

Table 8.3 Final shrinkage strain (x 10^6) of normal weight concrete

Location of member	Typical r.h., %	Notional size ($2A_c/u$), mm	
		≤ 150	600
Inside	50	600	500
Outside	80	330	280

Notes: A_c is the cross-sectional area of concrete
u is the perimeter of that area.
Table is valid between −20°C and 40°C.
Linear interpolation between the values in this table is permitted.

(7) **Relaxation of steel**. The 1000 hour relaxation value may be taken from the certificate of approval or from Figure 8.2. The long-term relaxation losses may be assumed to be the 1000 hour values multiplied by the factors in Table 8.4. 4.2.3.4.1

The initial stress should be taken as the value immediately after stressing for pre-tensioning, and the value immediately after transfer for post-tensioning.

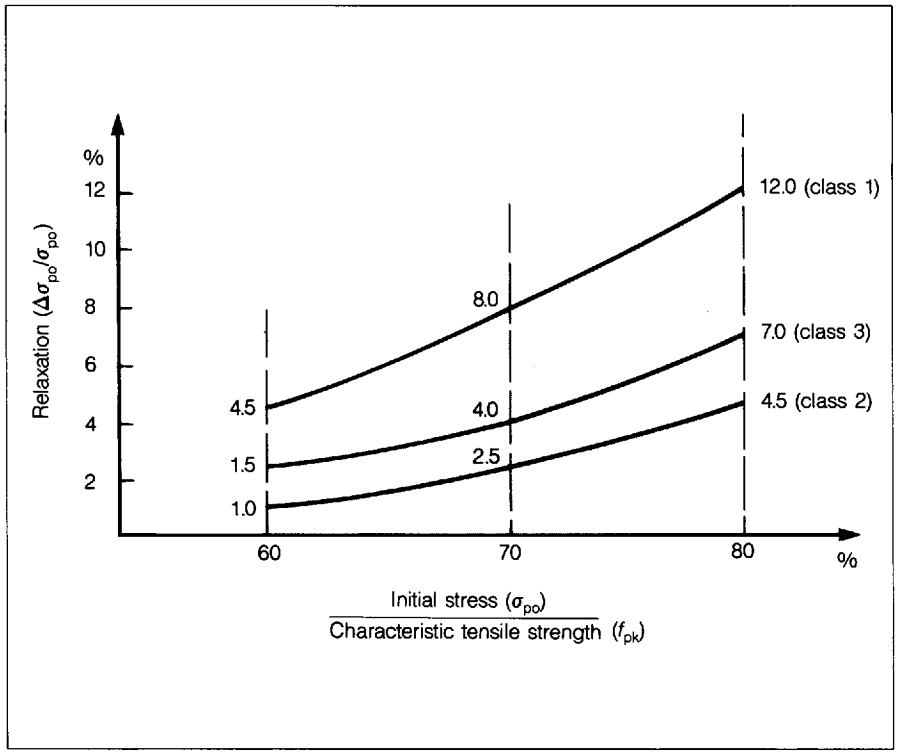

Figure 8.2 Relaxation losses after 1000 hours at 20°C

Table 8.4 Factors for long-term relaxation losses NAD

Tendon type	Wire and strand		Bar
Relaxation class	1	2	3
Pre-tensioning	1.5	1.2	-
Post-tensioning	2.0	1.5	2.0

(8) **Short-term relaxation** may be estimated using Table 8.5.

Table 8.5 Relaxation losses, 0 to 1000 hours

Time, hours	1	5	20	100	200	500	1000
Relaxation losses as percentages of losses after 1000 hours	15	25	35	55	65	85	100

(9) **Time-dependent losses** should be calculated from

$$\Delta\sigma_{p,c+s+r} = \frac{\epsilon_s(t,t_o)E_s + \Delta\sigma_{pr} + \alpha\phi(t,t_o)(\sigma_{cg} + \sigma_{cpo})}{1 + \alpha\frac{A_p}{A_c}\left[(1 + \frac{A_c}{I_c}z_{cp}^2)(1 + 0.8\phi(t,t_o))\right]}$$

where

$\Delta\sigma_{p,c+s+r}$ is the variation of stress in the tendons due to creep, shrinkage and relaxation at location x, at time t

$\epsilon_s(t,t_o)$ is the estimated shrinkage strain, derived from Section **8.6(6)**

$\alpha = E_s/E_{cm}$

E_s is the modulus of elasticity of the prestressing steel

E_{cm} is the modulus of elasticity of the concrete

$\Delta\sigma_{pr}$ is the variation of stress in the tendons at section x due to relaxation, derived from Section **8.6(7)**

$\phi(t,t_o)$ is a creep coefficient, derived from Section **8.6(5)**

σ_{cg} is the stress in the concrete adjacent to the tendons, due to self-weight and any other permanent loads

σ_{cpo} is the initial stress in the concrete adjacent to the tendons, due to prestress

A_p is the area of all the prestressing tendons at the level being considered

A_c is the area of the concrete section

I_c is the second moment of area of the concrete section

z_{cp} is the distance between the centre of gravity of the concrete section and the tendons.

8.7 Design value of prestress, P_d

2.5.4.2
2.5.4.3

(1) P_d generally may be taken as $P_{m,t}$ for serviceability calculations and at the ultimate limit state (but see Section **8.9**).

(2) For checking local effects (e.g. bursting at anchorages) the prestressing force should be taken as the characteristic strength of the tendon.

8.8 Analysis of the structure – ultimate limit state

2.5.4.4

(1) Structural analysis may be either linear (with or without redistribution) or non-linear. In statically indeterminate structures the secondary (parasitic) effects caused by the redundancies should be allowed for.

8.9 Design of sections – ultimate limit state

2.5.4.4.3

(1) The design should be carried out in accordance with the guidance given in Section **5.1**, using the design value, P_d, of the prestressing force. The prestrain corresponding to this force should be taken into account by shifting the origin of the stress-strain diagram by the amount of the prestrain.

P_d should be reduced to 0.9 $P_{m,t}$

where:

(a) more than 25% of the total area of the prestressed steel is within the compression zone; or

(b) the stress in the prestressing steel closest to the tension face is less than the maximum value in Figure 8.1.

4.3.2.1(5)

(2) In the calculation of the design shear force, V_{Sd}, account should be taken of the effect of any inclined tendons.

4.3.2.2(4)

If σ_{cp} exceeds $0.27f_{ck}$, the maximum design shear force that a section can support (see Section **5.2(3)**) should be reduced to

$$1.67V_{Rd2}(1 - 1.5\sigma_{cp}/f_{ck}).$$

4.3.2.2(8)

If the web contains grouted ducts with a diameter $\phi > b_w/8$, the web thickness should be reduced by $0.5\Sigma\phi$ in the calculation of V_{Rd2}, where $\Sigma\phi$ is determined at the most unfavourable level.

8.10 Serviceability limit state

8.10.1 Limitation of stress

4.4.1.1

(1) To prevent excessive creep, and the formation of longitudinal cracks and micro-cracking, the compressive stress in the concrete should be limited to the following:

(a) $0.6f_{ck}$ under the characteristic loads;

(b) $0.45f_{ck}$ under the quasi-permanent loads (see Section **6.2(3)**).

In the above calculations the mean value of prestress, $P_{m,t}$, should be used.

4.4.1.2(5)

Stresses may be calculated on the basis of an uncracked section if the resulting tensile stress in the concrete, under the characteristic loads, does not exceed f_{ctm} (see Table 2.1). Otherwise, a cracked section should be assumed.

(2) The stress in prestressing tendons should not exceed $0.75f_{pk}$ after allowing for all losses.

8.10.2 Cracking

4.4.2.1(7)

(1) In the absence of more detailed requirements, the limits for crack width given in Table 8.6 may be adopted.

Table 8.6 Crack width criteria

Exposure class (see Table 4.1)	Design crack width, w_k, under the frequent load combination, mm	
	Post-tensioned	Pre-tensioned
1	0.2	0.2
2	0.2	Decompression
3	Decompression or coating of the tendons and w_k = 0.2	
4		

The decompression limit requires that under the frequent load combination all parts of the tendons or ducts lie at least 25 mm within concrete in compression.

The frequent load combination may be taken as the permanent load, $G_k + P_{m,t}$, plus the following proportion of the characteristic variable load:

0.4 for dwellings;
0.6 for offices and stores;
0.7 for parking areas;
0.2 for snow and wind.

NAD

(2) Except for regions where the concrete remains in compression under the characteristic loading, a minimum amount of bonded reinforcement should be provided to control cracking. 4.4.2.2

The required area should be determined from Section **6.2(2)**, with the value of k_c for rectangular sections interpolated between 0.4 and zero, where:

k_c = 0.4 for pure bending and zero prestress;

k_c = zero when the concrete remains in compression under the characteristic loads and the relevant prestress.

(3) Prestressing tendons may be taken into account as minimum reinforcement within a 300 mm square surrounding the tendon. In the absence of better information concerning the bond behaviour they should be assumed to be only 50% effective.

(4) Where the minimum reinforcement specified in Section **8.10.2(2)** has been provided, no further measures are necessary for slabs where the overall depth does not exceed 200 mm. 4.4.2.3

In other cases, excessive crack widths generally may be avoided by complying with the recommendations in Section **6.2(3)**.

(5) In cases where no bonded reinforcement is provided (e.g. pre-tensioned members) an upper bound to the crack width may be obtained by considering the prestressing force as an external load and the section as unreinforced with no tensile strength. The crack width may be obtained from 4.4.2.4

$$w_k = 1.7(h-x)^2\sigma_c/xE_{cm}$$

where

w_k is the design crack width

h is the overall depth of the section

x is the depth of the compression zone due to the prestressing force and the design moment

σ_c is the stress in the concrete at the compression face

E_{cm} is the modulus of elasticity of the concrete.

8.10.3 Deflection

4.4.3.1

(1) Deflections should not be such as to impair the appearance and general utility of the structure, or to cause damage to other members, partitions, fixtures or finishes. The limiting deflections given in Sections **8.10.3(2)** and **(3)** below should ensure a generally satisfactory performance for structures such as dwellings, offices, public buildings and factories. Other limits, to be agreed with the client, may be appropriate in special circumstances.

(2) The calculated sag of a beam, slab or cantilever under the quasi-permanent loads (see Section **6.2(3)**) should not exceed span/250. The sag should be assessed relative to the supports.

(3) The calculated deflection occurring after the construction of other elements that are liable to damage by excessive subsequent movement should not exceed span/500. This limit may be relaxed where the element is designed to accommodate, or is known to be able to accommodate, greater deflections.

8.11 Anchorage zones

8.11.1 Pre-tensioned members

4.2.3.5.6

(1) The transmission length, l_{bp}, is given by

$$l_{bp} = \beta_b \phi$$

where ϕ is the nominal size of the tendon.

Values of β_b should be based on experimental data or experience. In the absence of other data, the values for β_b given in Table 8.7 may be used.

Table 8.7 Values of β_b for transmission length of pre-tensioned tendons

Concrete strength at transfer, N/mm^2	β_b	
	Strands and indented wires	Ribbed wires
25	75	55
30	70	50
35	65	45
40	60	40
45	55	35
50	50	30

Note: The table applies to strands with a cross-sectional area $\leq$ 100 mm^2, indented wires with $\phi \leq$ 8 mm, and ribbed wires with $\phi \leq$ 12 mm.

(2) The design value, $l_{bp,d}$, should be taken as $0.8l_{bp}$ or $1.2l_{bp}$, whichever is more critical.

(3) The dispersal length, $l_{p,eff}$, for tendons near the bottom of the section, may be taken as

$$l_{p,eff} = (l^2_{bp,d} + d^2)^{1/2}$$

(4) If the principal tensile stress at the ultimate limit state does not exceed $0.7f_{ctm}$ (see Table 2.1), the anchorage zone is considered satisfactory. If not, the following should be checked: 4.3.2.4.4(5)

$$(M_{Sd}/z + V_{Sd}/2) \leq (x/l_{bp,d})\, P_o \leq A_p f_{p0.1,k}/1.15$$

where x is the distance from the support.

8.11.2 Post-tensioned members

4.2.3.5.7

(1) The bearing stress behind anchorage plates, due to the force $A_p f_{pk}$, should not exceed 5.4.8

$$f_{Rdu} = 0.67 f_{ck} (A_{c1}/A_{co})^{1/2} \leq 2.2 f_{ck}$$

where

A_{c1} is the maximum area, having the same centre of gravity and shape as A_{co}, which it is possible to inscribe in the total area A_c in the plane of the loaded area (see Figure 8.3)

A_{co} is the loaded area.

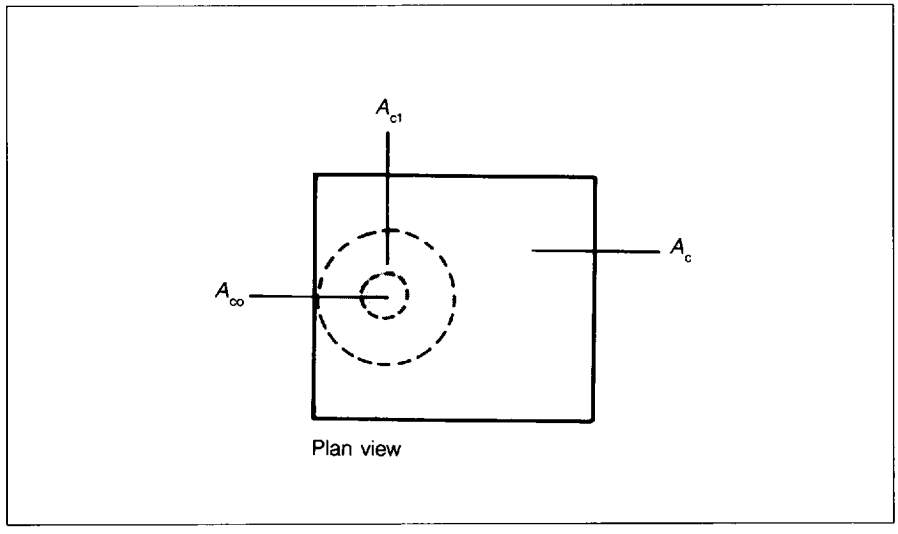

Figure 8.3 Anchorage zones of post-tensioned members

(2) Tensile forces caused by the concentrated forces should be assessed by a strut-and-tie model, or other appropriate idealisation, and the anchorage zone should be reinforced accordingly (see Section **5.7**).

8.12 Detailing

(1) To ensure adequate durability, the concrete cover to a pre-tensioned tendon, or to a duct containing a post-tensioned tendon, should be 5 mm greater than the values given in Table 4.2. 4.1.3.3

(2) The minimum cover should be not less than twice the tendon size for a pre-tensioned tendon, or the duct diameter for a post-tensioned tendon. NAD

(3) The covers and minimum member sizes given in Tables 8.8 and 4.4 will ensure that the requirements for fire resistance are satisfied (see Section **4.3(1)**). NAD BS 8110

(4) The minimum clear horizontal and vertical spacing between pre-tensioned tendons should be as shown in Figure 8.4. 5.3.3.1

Table 8.8 Cover to steel for fire resistance

Fire resistance period, hr	Nominal cover, mm					
	Beams		Floors		Ribs	
	Simply supported	Continuous	Simply supported	Continuous	Simply supported	Continuous
0.5	20	20	20	20	20	20
1.0	20	20	25	20	35	20
1.5	35	20	30	25	45	35
2.0	60	35	40	35	55	45
3.0	70	60	55	45	65	55
4.0	80	70	65	55	75	65

Notes: Cover relates to links for beams and to tendons for floors and ribs. Where the cover exceeds 40 mm, supplementary reinforcement will be required to prevent spalling of the concrete. This may be avoided by adopting other special measures to enhance fire resistance (see BS 8110: Part 2).

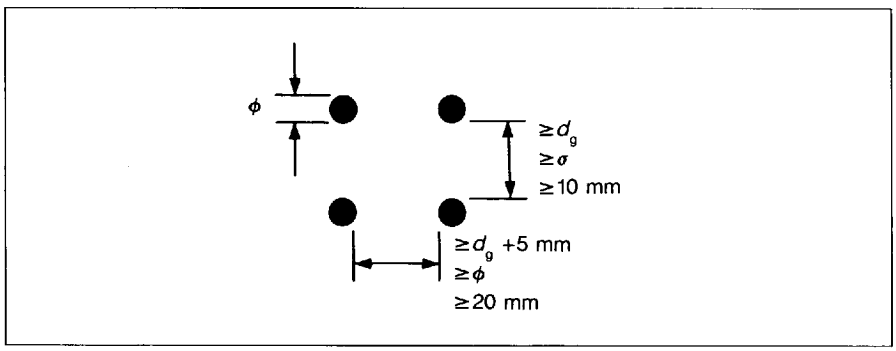

Figure 8.4 Minimum clear spacing between pre-tensioned tendons

(5) The minimum clear spacing between individual ducts in post-tensioned members should be the greater of: 5.3.3.2

(a) the diameter of the duct or 40 mm horizontally;

(b) the diameter of the duct or 50 mm vertically.

(6) Couplers should generally be located away from intermediate supports. 5.3.4(4)

(7) Not more than 50% of tendons should be joined at the same section. 5.3.4(5)

(8) Anchorage zones of post-tensioned members should be provided with distributed reinforcement, near all surfaces, in the form of an orthogonal mesh in three dimensions. 5.4.6(1)

(9) Where groups of post-tensioned tendons are spaced apart, suitable links should be arranged at the ends of the member to avoid splitting. 5.4.6(2)

(10) At any part of the anchorage zone, the reinforcement ratio on either side of the block should be at least 0.15% in each direction. 5.4.6(3)

(11) Where a strut and tie model has been used to determine the transverse forces, the following apply: 5.4.6(5)

(a) The reinforcement should be distributed within the tension zone over a length approximately equal to the greater lateral dimension of the anchorage block.

(b) The reinforcement should be in the form of closed links.

APPENDIX

A1 Introduction

British codes, particularly in recent years, have tended to provide more design aids than are included in EC2. For example, BS 8110 and all previous UK codes have provided coefficients for calculating the bending moments in simple systems of continuous beams, in slabs supported on four sides, and in flat slabs. EC2 provides no such guidance. Recent UK codes have also provided design charts for beams and rectangular columns in a separate part of the code (e.g. BS 8110: Part 3). The purpose of this appendix is to provide information of this type that the designer has come to expect. In some cases the information has been derived from the assumptions in EC2 and, in other cases, it has been adapted from BS 8110 or similar sources.

A2 Analysis of simple framed structures

A2.1 General

(1) EC2 and the Concise Code give basic approaches that are acceptable for the analysis of structures. These approaches are:

(a) non-linear analysis;

(b) elastic analysis with or without redistribution;

(c) plastic analysis.

(2) Rules for the use of these methods – and their limitations – are given in EC2, but no direct assistance is given on such matters as acceptable simplifications of the structure, bending moment coefficients, etc. This section fills this gap with information taken largely from BS 8110.

EC2 permits simplified methods to be used and there is no reason why the simplified methods given in BS 8110 should not be acceptable, provided that the appropriate EC2 partial safety factors and load cases are used. The bending moment coefficients for beams and flat slabs have been taken from CP 110[(A1)], rather than from BS 8110, because the load arrangements in BS 8110 are different from those in EC2. CP 110 is similar to EC2 in that it requires consideration of alternate and adjacent spans loaded. BS 8110 requires consideration of alternate and all spans loaded, with further simplifications for slabs.

A2.2 Simplification of framed structures

A2.2.1 Monolithic frames not providing stability

(1) Any of the simplifications illustrated in Figure A1 may be used, as described below.

(a) The internal forces and moments in a continuous beam and attached columns may be obtained by considering the frame simplified into sub-frames, each consisting of a beam together with the columns above and below the beam. The remote ends of the columns may be assumed to be fixed unless a pinned end is clearly more appropriate (see Figure A1(b)).

The vertical loads to be considered are 1.35 G_k on all spans, and 1.5 Q_k arranged as follows:

(i) alternate spans loaded;

(ii) pairs of adjacent spans loaded.

(b) Further simplification may be carried out by considering in turn each individual span, plus the columns and beam spans attached to each end of the span. The remote ends of the attached beams and columns may

be considered to be fixed unless the assumption of a pinned end is clearly more appropriate. The stiffness of the attached beams should be taken as half their actual value, if the remote ends are considered to be fixed.

The moments in the columns may be found using this simplification, provided that the sub-frame has as its central span the longer of the two spans framing into the column considered (see Figure A1(c)).

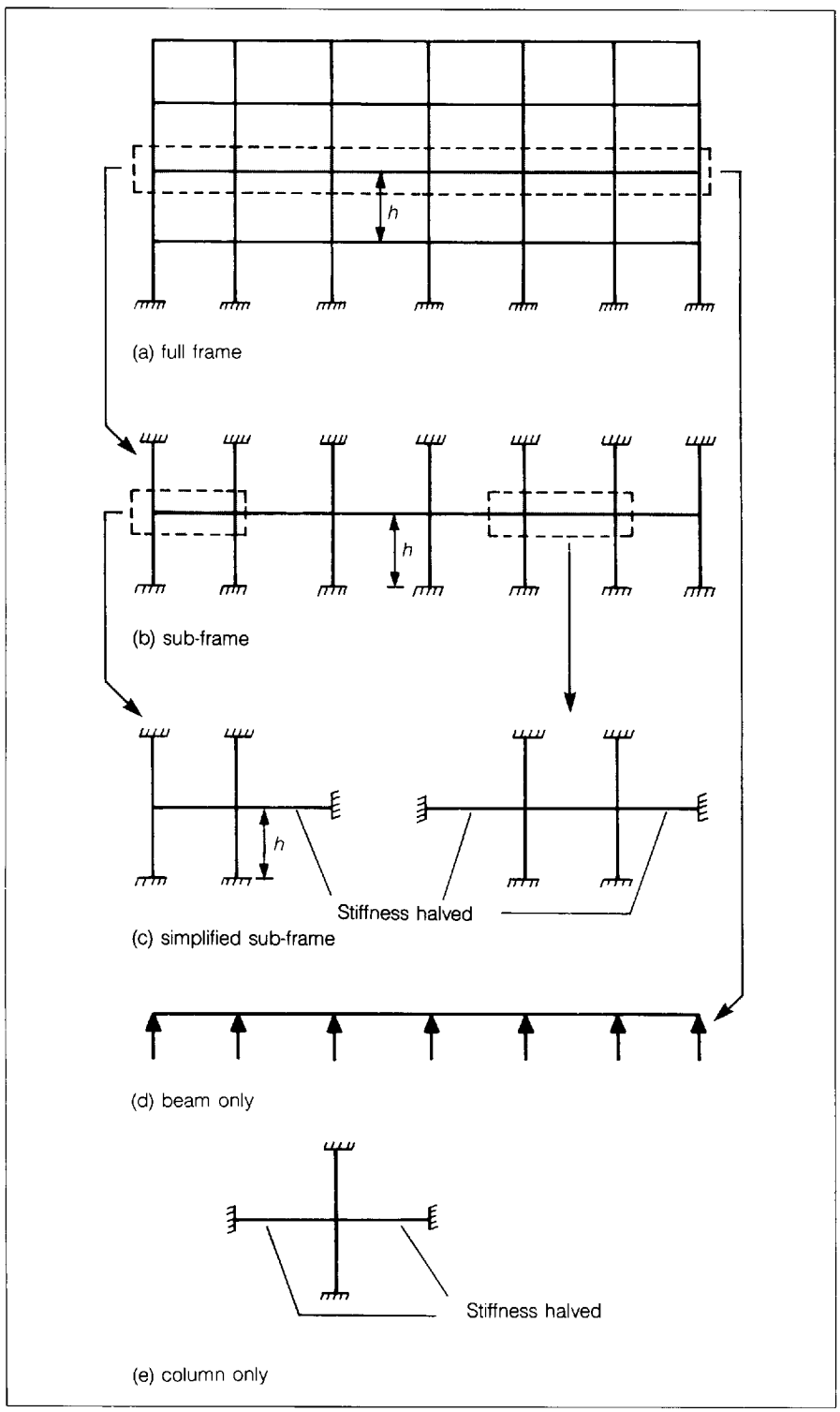

Figure A1 Simplification of a frame for analysis of beams and columns

(c) The shears and moments in a continuous beam may be conservatively assessed by ignoring the resistance to rotation at the supports provided by the columns (see Figure A1(d)).

In this case the moments in the columns may be assessed by considering each joint in turn, with the connected members assumed to be fixed or pinned, as appropriate, at the remote ends (see Figure A1(e)).

(d) For continuous beams with uniform loading ($G_k \geq Q_k$) and with at least three spans that do not differ by more than 15%, the values given in Table A1 may be used. For defining the limiting values of x/d (see Table A6), the moments may be assumed to be elastic values.

Table A1 Ultimate bending moments and shear forces in continuous beams of three or more equal spans

	At outer support	Near middle of end span	At first interior support	At middle of interior spans	At interior supports
Moment	0	$0.09Fl$	$0.11Fl$	$0.07Fl$	$0.10Fl$
Shear	$0.45F$	–	$0.6F$	–	$0.55F$

Notes: l is the effective span
F is the total ultimate load on the span = $1.35G_k + 1.5Q_k$
No redistribution should be carried out on the moments

A2.2.2 Sway frames

(1) Because sway frames require more care than braced frames a more thorough analysis of the complete structure may frequently be prudent. However, for sway frames having three or more approximately equal bays, the internal forces and moments may be assessed at each section by taking the most severe of the moments and forces resulting from the following three conditions:

(a) The moments and forces resulting from the analysis for the vertical loads calculated in accordance with one of the methods given in A2.2.1.

(b) The sum of the moments and forces obtained from:

(i) an elastic analysis using the simplification given in A2.2.1 (a) loaded with $1.35G_k$ and $1.35Q_k$, arranged as described in A2.2.1 (a); and

(ii) an elastic analysis of the full frame subjected to a loading of only 1.35 times wind load. The frame may be simplified by assuming points of contraflexure at the mid-height of all columns.

(c) The sum of the moments and forces obtained from:

(i) an elastic analysis using the simplification given in A2.2.1 (a) loaded only with $1.35G_k$; and

(ii) an elastic analysis as in A2.2.2 (b) (ii) above, but with a lateral load of 1.5 times wind load.

It should be remembered that the lateral load used in the analyses should not be less than the minimum horizontal load given in Section **3.4**.

A3 Analysis of slab systems

A3.1 General

(1) One-way spanning slab systems may be analysed in the same way as beams (see Section **A2** above).

(2) Alternatively, when using Table A1, the support moments may be reduced to $0.09Fl$ at the first interior support and to $0.07Fl$ at other interior supports. In such cases the reinforcement should be high ductility (Class H as defined in prEN 10080[A2]) and x/d should be not greater than 0.25.

(3) The following sections deal with two-way spanning slab systems, either supported by beams (see Section **A3.2**) or acting as flat slabs (see Section **A3.3**).

A3.2 Slabs supported on four sides with corners prevented from lifting

(1) The coefficients given in Tables A2 and A3 have been derived using yield-line analysis. This is permitted within EC2, provided that high ductility reinforcement (Class H as defined in prEN 10080) is used and that x/d is not greater than 0.25. The design ultimate moments are obtained from the relations

$$m_{dx} = \beta_{sx} n l_x^2 \quad \text{(A1)}$$

$$m_{dy} = \beta_{sy} n l_x^2 \quad \text{(A2)}$$

where

m_{dx} and m_{dy} are, respectively, the moments per unit width over the centre three-quarters of the slab breadth in the x and y directions

n is the ultimate load on the slab per unit area

$= 1.35g_k + 1.5\,q_k$

l_x is the shorter span.

(2) The maximum shear force in the slab along the line of the support may be estimated from the relations

$$V_{sdx} = \beta_{vx} n l_x \quad \text{(A3)}$$

$$V_{sdy} = \beta_{vy} n l_x \quad \text{(A4)}$$

where

V_{sdx} and V_{sdy} are, respectively, the shears per unit length along the support perpendicular to the x and y directions.

(3) The loads on the supporting beams may be assessed by assuming that the shear force, given by the above equations, acts over the central three quarters of the length of the support, as shown in Figure A2.

(4) The resulting moments will be reasonable where the loadings on adjacent panels are approximately the same as on the panel being considered, and where the spans in any one direction are approximately the same. Where this is not the case the values calculated from the table will require adjustment.

(5) The following procedure may be used:

1. Calculate the support moments from Table A2 for all the panels in one direction. Treat these values as fixed-end moments and use moment distribution to adjust the values as a function of the relative stiffnesses of the panels.

Table A2 Bending moment coefficients for uniformly loaded rectangular panels supported on four sides with provision for torsion at corners

Type of panel and moments considered	Short span coefficients β_{sx}								Long span coefficients, β_{sy} for all values of l_y/l_x
	Values of l_y/l_x								
	1.0	1.1	1.2	1.3	1.4	1.5	1.75	2.0	
Interior panels									
Negative moment at continuous edge	0.031	0.037	0.042	0.046	0.050	0.053	0.059	0.063	0.032
Positive moment at mid-span	0.024	0.028	0.032	0.035	0.037	0.040	0.044	0.048	0.024
One short edge discontinuous									
Negative moment at continuous edge	0.039	0.044	0.048	0.052	0.055	0.058	0.063	0.067	0.037
Positive moment at mid-span	0.029	0.033	0.036	0.039	0.041	0.043	0.047	0.050	0.028
One long edge discontinuous									
Negative moment at continuous edge	0.039	0.049	0.056	0.062	0.068	0.073	0.082	0.089	0.037
Positive moment at mid-span	0.030	0.036	0.042	0.047	0.051	0.055	0.062	0.067	0.028
Two adjacent edges discontinuous									
Negative moment at continuous edge	0.047	0.056	0.063	0.069	0.074	0.078	0.087	0.093	0.045
Positive moment at mid-span	0.036	0.042	0.047	0.051	0.055	0.059	0.065	0.070	0.034
Two short edges discontinuous									
Negative moment at continuous edge	0.046	0.050	0.054	0.057	0.060	0.062	0.067	0.070	–
Positive moment at mid-span	0.034	0.038	0.040	0.043	0.045	0.047	0.050	0.053	0.034
Two long edges discontinuous									
Negative moment at continuous edge	–	–	–	–	–	–	–	–	0.045
Positive moment at mid-span	0.034	0.046	0.056	0.065	0.072	0.078	0.091	0.100	0.034
Three edges discontinuous (one long edge continuous)									
Negative moment at continuous edge	0.057	0.065	0.071	0.076	0.081	0.084	0.092	0.098	–
Positive moment at mid-span	0.043	0.048	0.053	0.057	0.060	0.063	0.069	0.074	0.044
Three edges discontinuous (one short edge continuous)									
Negative moment at continuous edge	–	–	–	–	–	–	–	–	0.058
Positive moment at mid-span	0.042	0.054	0.063	0.071	0.078	0.084	0.096	0.105	0.044
Four edges discontinuous									
Positive moment at mid-span	0.055	0.065	0.074	0.081	0.087	0.092	0.103	0.111	0.056

Table A3 Shear force coefficients for uniformly loaded rectangular panels supported on four sides with provision for torsion at corners

Type of panel and location	β_{vx} for values of l_y/l_x								β_{vy}
	1.0	1.1	1.2	1.3	1.4	1.5	1.75	2.0	
Four edges continuous									
Continuous edge	0.33	0.36	0.39	0.41	0.43	0.45	0.48	0.50	0.33
One short edge discontinuous									
Continuous edge	0.36	0.39	0.42	0.44	0.45	0.47	0.50	0.52	0.36
Discontinuous edge	–	–	–	–	–	–	–	–	0.24
One long edge discontinuous									
Continuous edge	0.36	0.40	0.44	0.47	0.49	0.51	0.55	0.59	0.36
Discontinuous edge	0.24	0.27	0.29	0.31	0.32	0.34	0.36	0.38	–
Two adjacent edges discontinuous									
Continuous edge	0.40	0.44	0.47	0.50	0.52	0.54	0.57	0.60	0.40
Discontinuous edge	0.26	0.29	0.31	0.33	0.34	0.35	0.38	0.40	0.26
Two short edges discontinuous									
Continuous edge	0.40	0.43	0.45	0.47	0.48	0.49	0.52	0.54	–
Discontinuous edge	–	–	–	–	–	–	–	–	0.26
Two long edges discontinuous									
Continuous edge	–	–	–	–	–	–	–	–	0.40
Discontinuous edge	0.26	0.30	0.33	0.36	0.38	0.40	0.44	0.47	–
Three edges discontinuous (one long edge continuous)									
Continuous edge	0.45	0.48	0.51	0.53	0.55	0.57	0.60	0.63	–
Discontinuous edge	0.30	0.32	0.34	0.35	0.36	0.37	0.39	0.41	0.29
Three edges discontinuous (one short edge continuous)									
Continuous edge	–	–	–	–	–	–	–	–	0.45
Discontinuous edge	0.29	0.33	0.36	0.38	0.40	0.42	0.45	0.48	0.30
Four edges discontinuous									
Discontinuous edge	0.33	0.36	0.39	0.41	0.43	0.45	0.48	0.50	0.33

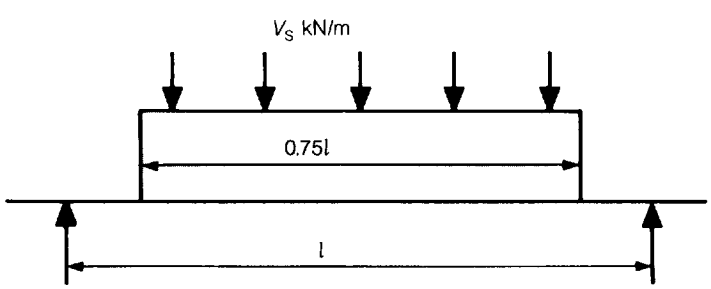

Note: $V_S = V_{Sdx}$ when $l = l_y$, and $V_S = V_{Sdy}$ when $l = l_x$

Figure A2 Distribution of load on a beam supporting a two-way spanning slab.

2. Assuming that the distribution of the moments is parabolic, adjust the mid-span moment to account for the modified support moments and to maintain equilibrium. This is achieved by ensuring that the value of M_t given by equation A5 remains the same before and after adjustment of the moments.

$$M_t = \frac{(M_{sl} + M_{sr})}{2} + M_c \quad \text{.....(A5)}$$

where

M_{sl} and M_{sr} are, respectively, the support moments at the left and right hand end of the span

M_c is the moment at the centre.

(6) The above procedure, which may need to be carried out in either or both directions, is illustrated in Figure A3.

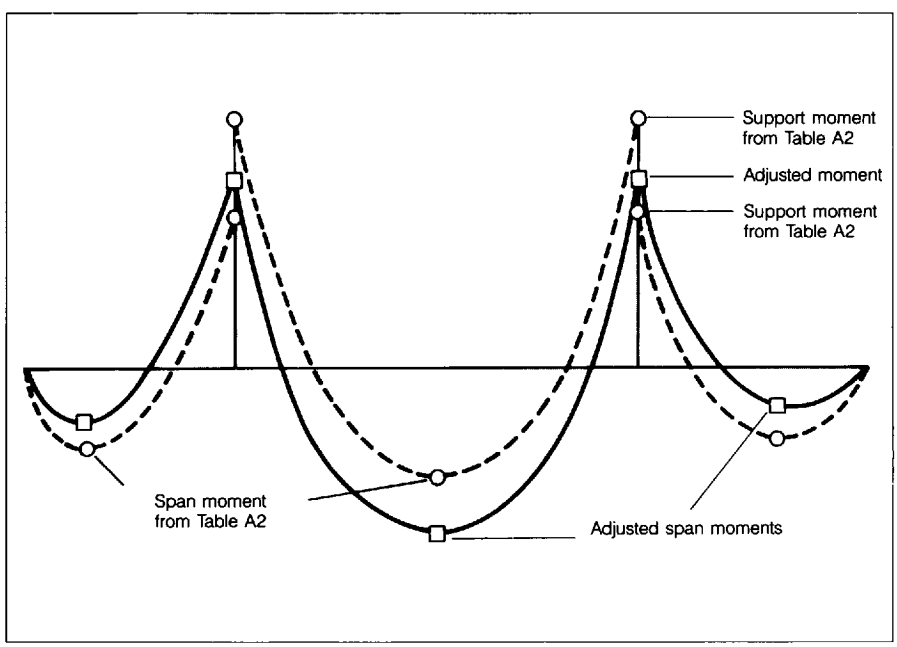

Figure A3 Procedure for adjusting moments in adjacent panels

(7) To allow for torsions resulting from holding down the corners of the slab, the following rules should be applied when detailing the reinforcement:

(a) Torsion reinforcement should be provided at any corner where the slab is simply supported on both the edges meeting at that corner. This should consist of top and bottom reinforcement, each with layers of bars placed parallel to the sides of the slab and extending from the edges for a minimum distance of one-fifth of the shorter span. The area of reinforcement in each of these four layers should be three-quarters of the area required for the maximum mid-span design moment in the slab.

(b) Torsion reinforcement equal to half that described in the preceding paragraph should be provided at a corner where the slab is continuous over one of the containing edges.

(c) Torsion reinforcement need not be provided at any corner where the slab is continuous over both containing edges.

A3.3 Flat slabs with or without drops

A3.3.1 General

(1) The analytical procedures given in this section are also applicable to the analysis of waffle slabs.

A3.3.2 Equivalent frame approach

(1) In the absence of a more rigorous approach to analysis, such as the use of finite element or grillage methods, flat slab structures consisting of a series of rectangular panels may be divided longitudinally and transversely into a series of plane frames. The frames should consist of a strip of slab extending across the whole structure in the direction considered, plus the columns above and below the floor considered, which are assumed to be fixed at their remote ends.

(2) For assessing the loading on the frame, the breadth of the strip should be taken as the distance between the centrelines of the panels on either side of the row of columns considered. Where the analysis is concerned only with vertical loading, the stiffness of the slab may also be assessed on the basis of this breadth. However, where the effects of horizontal loads are being considered, the stiffness of the slab should be based on half the strip breadth as defined above.

(3) An elastic analysis of the frames may then be carried out and redistribution carried out if desired.

(4) Where there are at least three rows of panels of approximately equal spans in the direction being considered, the coefficients given in Table A1 may be used. These may be modified in accordance with Section **A3.1(2)** where appropriate.

A3.3.3 Distribution of moments within panels

(1) The moments obtained from an analysis of the equivalent frames should be distributed across the breadth of the slab in accordance with the rules given below. This is to ensure that the distribution of reinforcement corresponds roughly with the distribution of moments that would arise from a full analysis of the slab system.

(2) In addition, torsional cracking in the slab in the region of edge columns will limit the moment that can be transferred between the slab and the column. This may result in a need to reduce the negative moments at the edges below those given by the analysis.

(3) The panels are divided into column strips and middle strips as shown in Figures A4 and A5, which show the following details:

Figure A4(a)	solid slab with level soffit;
Figure A4(b)	solid slab with drops, or waffle slab with solid portion around columns;
Figure A5	column strips at edge columns.

(4) Where there is a support common to two panels which have dimensions such that the strips in one panel do not match those in the adjacent panel over the common support, then the division should be adopted from the panel giving the wider column strip.

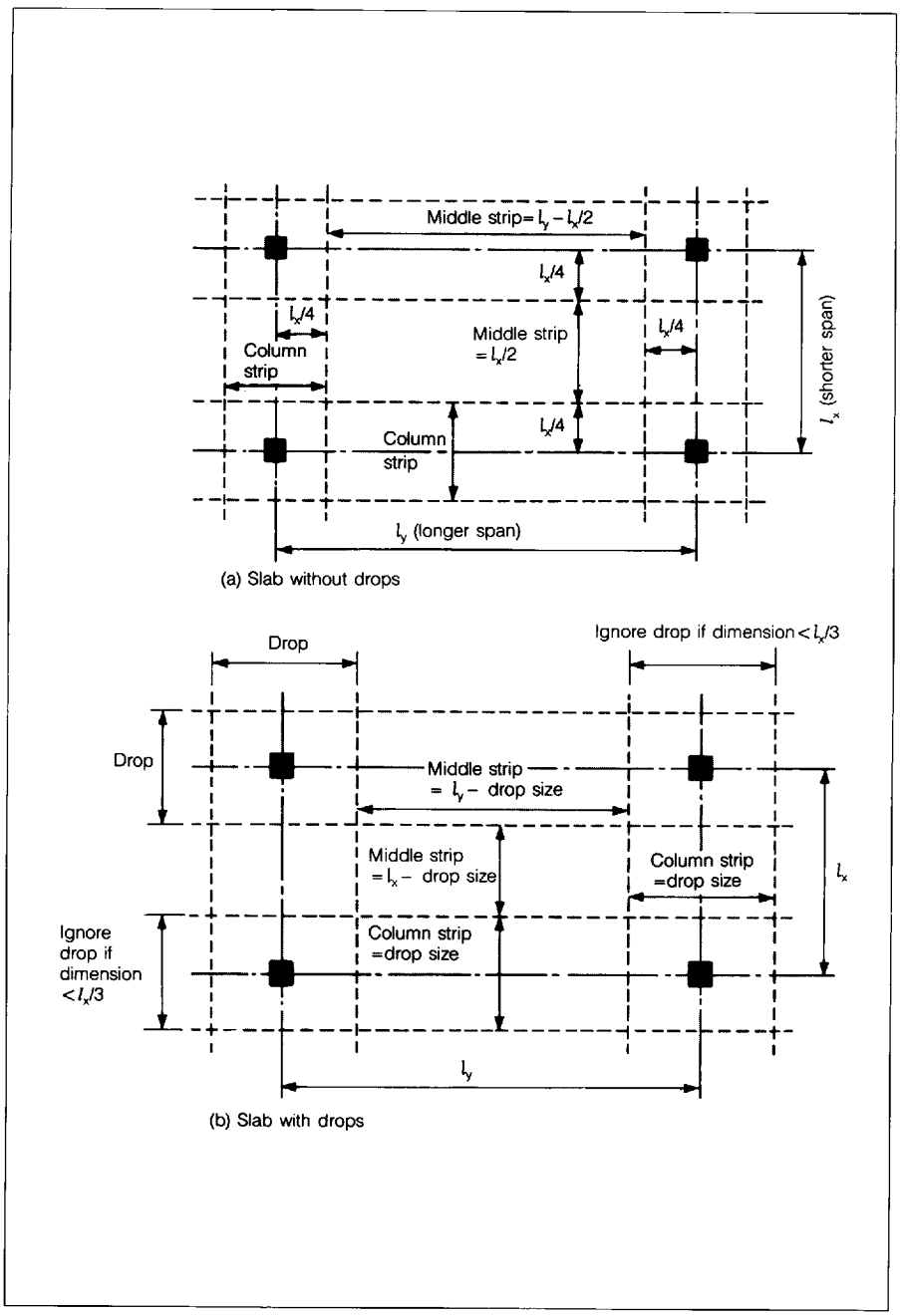

Figure A4 Division of panels in flat slabs

(5) If the edge moment obtained from the analysis exceeds $0.18b_e d^2 f_{ck}$, where b_e is the width of the column strip for the edge column, then the moment should be limited to the above value and the positive moment in the end panel increased accordingly to maintain equilibrium. If this requires a reduction of the edge moment of more than 50%, an alternative edge detail should be considered.

(6) The design moments should be apportioned between the column and middle strips as given in Table A4. For the case shown in Figure A4(b), the design moments to be resisted by the middle strip should be increased in proportion to the increased width of the strip. The design moments to be resisted by the column strip may be decreased accordingly.

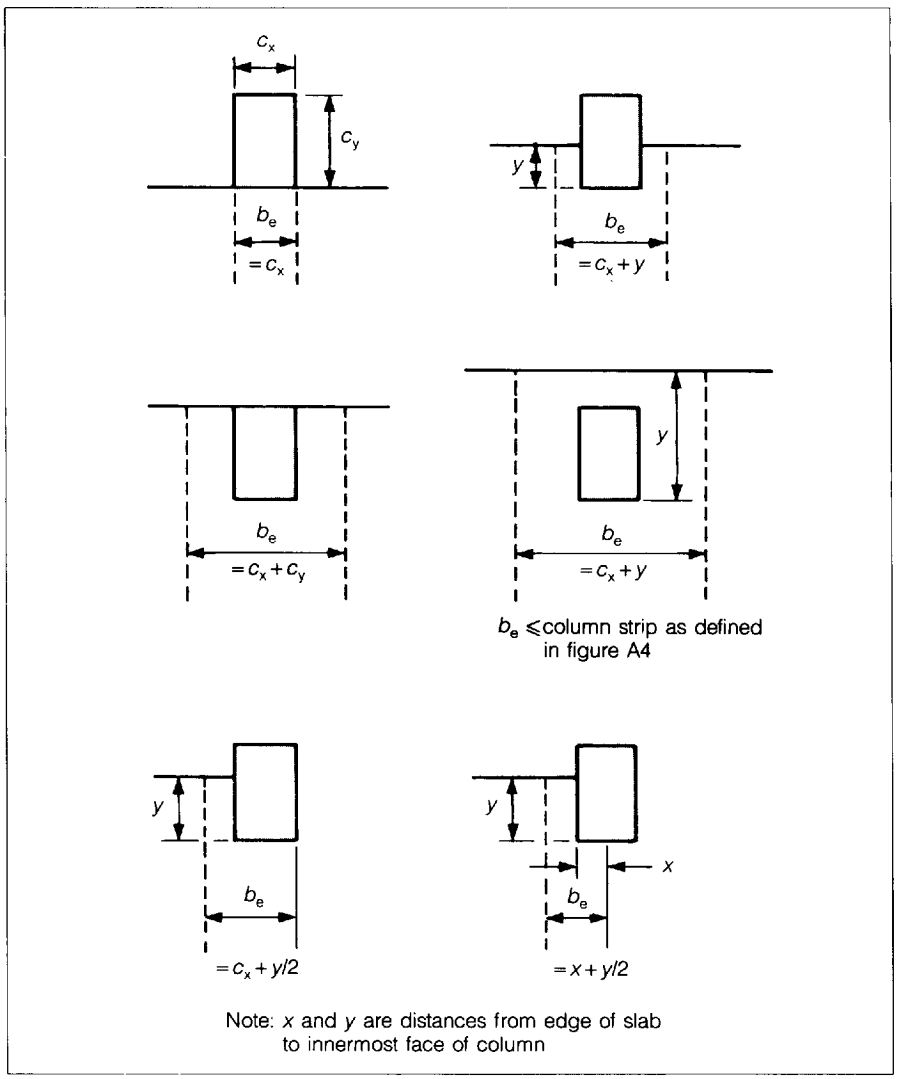

Figure A5 Definition of breadth of the column strip, b_e, for various typical cases of edge column

Table A4 Distribution of design moments in the panels of flat slabs

	Column strip	Middle strip
Negative moment at edge column	100% but not more than 0.18 $b_e\, d^2 f_{ck}$	0
Negative moment at internal column	75%	25%
Positive moment in span	55%	45%

(7) Where the edge of a slab is supported by a wall, or an edge beam with a depth greater than 1.5 times the slab thickness, then:

(a) the total design load to be carried by the wall or beam should consist of those loads directly on the wall or beam, plus a uniformly distributed load equal to 1/4 of the total design load on the panel; and

(b) the design moments for the half column strip adjacent to the wall or beam should be 1/4 of the design moments established as described above.

A3.3.4 Distribution of reinforcement within panels.

(1) In general, the reinforcement required in each column and middle strip should be distributed uniformly. In solid slabs without drops, the reinforcement required to resist the column strip negative moment at an internal column should be placed with two-thirds of the reinforcement within the central half of the strip. It should be noted that the reinforcement provided should also meet the minimum moment requirements pertaining to the punching shear resistance (see Table 5.2).

A4 Design of sections for flexure, or combined flexure and axial load

A4.1 Concrete grades

(1) EC2 and the Concise Code use the cylinder strength (f_{ck}) to define the concrete strength in design equations, although cubes may be used for control purposes. The grade designations give both cylinder and cube strengths as C (cylinder strength) / (cube strength) e.g. C25/30.

(2) Occasionally it may be necessary to use cube strengths that do not correspond exactly to one of the specified grades. A relationship between cylinder and cube strength is then required in order to obtain an appropriate value for f_{ck}. The relationship implicit in EC2 and ENV 206 is given in Figure A6.

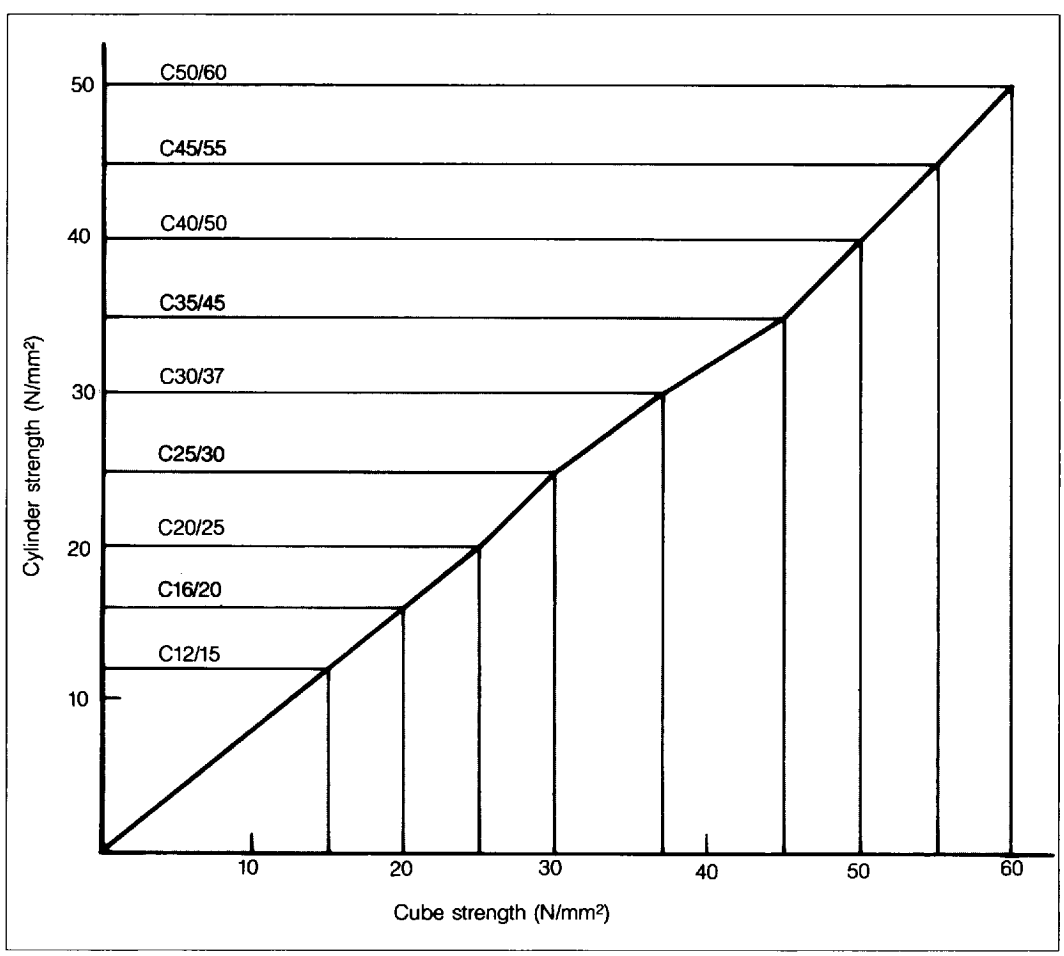

Figure A6 Relationship between cube and cylinder strengths of concrete

A4.2 Rectangular sections

(1) The following equations and design tables have been derived from the assumptions given in Section **5.1**, combined with the redistribution limits given in Section **3.5**. They are entirely in accordance with EC2.

(a) Equations for singly reinforced rectangular sections

$$\mu = \frac{M}{bd^2 f_{ck}}$$

$$\omega = \frac{A_s}{bd} \cdot \frac{f_{yk}}{f_{ck}}$$

$$x/d = 1.918\ \omega \quad \text{.....(A6)}$$

$$\omega = 0.652 - \sqrt{(0.425 - 1.5\mu)} \quad \text{.....(A7)}$$

Table A5 gives ω and x/d as a function of μ

(b) Limits to use of singly reinforced sections

Limits to x/d as a function of the redistributed moment ratios are given in Clause 2.5.3.4.2 of EC2. These can be re-written as:

for concrete grades $\leq$ C35/45

$$(x/d)_{lim} = \frac{(\delta - 0.44)}{1.25} \quad \text{.....(A8(a))}$$

for concrete grades > C35/45

$$(x/d)_{lim} = \frac{(\delta - 0.56)}{1.25} \quad \text{.....(A8(b))}$$

Equations can be derived for ω_{lim} and μ_{lim} for rectangular sections as a function of $(x/d)_{lim}$. These are:

$$\mu_{lim} = 0.4533(x/d)_{lim}\ (1-0.4(x/d)_{lim}) \quad \text{.....(A9)}$$

$$\omega_{lim} = (x/d)_{lim}/1.918 \quad \text{.....(A10)}$$

Table A6 gives values of $(x/d)_{lim}$, μ_{lim} and ω_{lim} as a function of the amount of redistribution carried out. Clause 2.5.3.5.5 of EC2 states that plastic design (e.g. yield line analysis) can be used where $x/d \leq 0.25$. The limits corresponding to this value are also included in the table.

(c) Compression reinforcement

Compression reinforcement is required in any section where $\mu > \mu_{lim}$. The amount can be calculated from Equation A11.

$$\omega' = \frac{(\mu - \mu_{lim})}{0.87[1 - (d'/d)]} \quad \text{.....(A11)}$$

where

ω' = mechanical ratio of compression steel

$$= \frac{A'_s}{bd} \cdot \frac{f_{yk}}{f_{ck}}$$

A'_s is the area of compression reinforcement

d' is the depth from compression face to centroid of compression reinforcement.

Table A5 Flexural reinforcement in singly reinforced rectangular sections.

$\frac{M}{bd^2f_{ck}}$	$\frac{A_sf_{yk}}{bdf_{ck}}$	x/d	z/d	$\frac{M}{bd^2f_{ck}}$	$\frac{A_sf_{yk}}{bdf_{ck}}$	x/d	z/d
0.010	0.012	0.022	0.991	0.090	0.113	0.217	0.913
0.012	0.014	0.027	0.989	0.092	0.116	0.223	0.911
0.014	0.016	0.031	0.987	0.094	0.119	0.228	0.909
0.016	0.019	0.036	0.986	0.096	0.122	0.234	0.907
0.018	0.021	0.040	0.984	0.098	0.125	0.239	0.904
0.020	0.023	0.045	0.982	0.100	0.127	0.245	0.902
0.022	0.026	0.050	0.980	0.102	0.130	0.250	0.900
0.024	0.028	0.054	0.978	0.104	0.133	0.256	0.898
0.026	0.031	0.059	0.977	0.106	0.136	0.261	0.896
0.028	0.033	0.063	0.975	0.108	0.139	0.267	0.893
0.030	0.035	0.068	0.973	0.110	0.142	0.272	0.891
0.032	0.038	0.073	0.971	0.112	0.145	0.278	0.889
0.034	0.040	0.077	0.969	0.114	0.148	0.284	0.887
0.036	0.043	0.082	0.967	0.116	0.151	0.289	0.884
0.038	0.045	0.087	0.965	0.118	0.154	0.295	0.882
0.040	0.048	0.092	0.963	0.120	0.157	0.301	0.880
0.042	0.050	0.096	0.961	0.122	0.160	0.307	0.877
0.044	0.053	0.101	0.960	0.124	0.163	0.313	0.875
0.046	0.055	0.106	0.958	0.126	0.166	0.319	0.873
0.048	0.058	0.111	0.956	0.128	0.169	0.324	0.870
0.050	0.060	0.116	0.954	0.130	0.172	0.330	0.868
0.052	0.063	0.121	0.952	0.132	0.175	0.336	0.865
0.054	0.065	0.125	0.950	0.134	0.179	0.343	0.863
0.056	0.068	0.130	0.948	0.136	0.182	0.349	0.861
0.058	0.071	0.135	0.946	0.138	0.185	0.355	0.858
0.060	0.073	0.140	0.944	0.140	0.188	0.361	0.856
0.062	0.076	0.145	0.942	0.142	0.191	0.367	0.853
0.064	0.078	0.150	0.940	0.144	0.195	0.373	0.851
0.066	0.081	0.155	0.938	0.146	0.198	0.380	0.848
0.068	0.084	0.160	0.936	0.148	0.201	0.386	0.846
0.070	0.086	0.165	0.934	0.150	0.205	0.393	0.843
0.072	0.089	0.170	0.932	0.152	0.208	0.399	0.840
0.074	0.092	0.176	0.930	0.154	0.211	0.405	0.838
0.076	0.094	0.181	0.928	0.156	0.215	0.412	0.835
0.078	0.097	0.186	0.926	0.158	0.218	0.419	0.833
0.080	0.100	0.191	0.924	0.160	0.222	0.425	0.830
0.082	0.102	0.196	0.921	0.162	0.225	0.432	0.827
0.084	0.105	0.202	0.919	0.164	0.229	0.439	0.824
0.086	0.108	0.207	0.917	0.166	0.232	0.446	0.822
0.088	0.111	0.212	0.915				

Table A6 Limiting values

% redistribution	δ	$(x/d)_{lim}$		μ_{lim}		ω_{lim}	
		$f_{ck} \leq 35$	$f_{ck} > 35$	$f_{ck} \leq 35$	$f_{ck} > 35$	$f_{ck} \leq 35$	$f_{ck} > 35$
0	1.00	0.448	0.352	0.1167	0.1371	0.2336	0.1835
5	0.95	0.408	0.312	0.1548	0.1238	0.2127	0.1627
10	0.90	0.368	0.272	0.1423	0.1099	0.1919	0.1418
15	0.85	0.328	0.232	0.1292	0.0954	0.1710	0.1210
20	0.80	0.288	0.192	0.1155	0.0803	0.1502	0.1001
25	0.75	0.248	0.152	0.1013	0.0647	0.1293	0.0792
30	0.70	0.208	0.112	0.0864	0.0485	0.1084	0.0584
Plastic design		0.25		0.1020		0.1303	

The area of tension reinforcement can now be obtained from:

$$\omega = \omega_{lim} + \omega' \quad \text{(A12)}$$

A4.3 Flanged beams

(1) For beams with flanges on the compression side of the section, the formulae for rectangular sections may be applied provided that

$$x/d \leq h_f/d$$

where h_f is the thickness of the flange.

(2) For beams where the neutral axis lies below the flange, normally it will be sufficiently accurate to assume that the centre of compression is located at mid-depth of the flange. Thus, for singly reinforced beams

$$M = 0.87A_s f_{yk}(d - h_f/2) \quad \text{(A13)}$$

(3) The neutral axis depth is given approximately by

$$x/d = 1.918\,(b/b_r)\,\omega - 1.25\,(b/b_r - 1)\,h_f/d \quad \text{(A14)}$$

where b_r is the rib width, and the definition of ω is identical to that for a rectangular section.

A4.4 Symmetrically reinforced rectangular columns

(1) Figures A7(a) to A7(e) give non-dimensional design charts for symmetrically reinforced rectangular columns where the reinforcement can be assumed to be concentrated in the corners.

(2) Where the reinforcement is not concentrated in the corners, a conservative approach is to calculate an effective value of d' as illustrated in Figure A8.

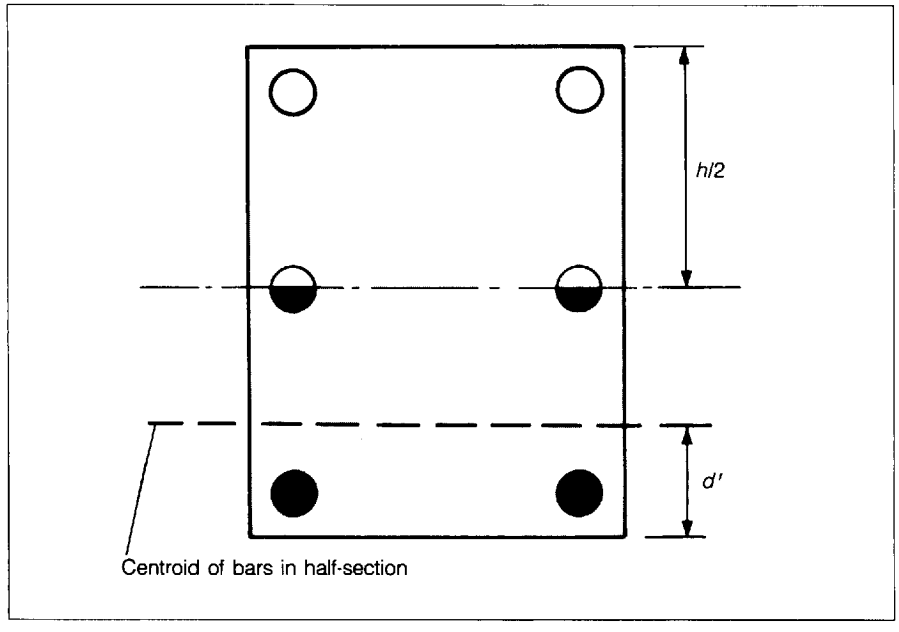

Figure A8 Method for assessing an effective value for d' for use with the design charts in Figure A7

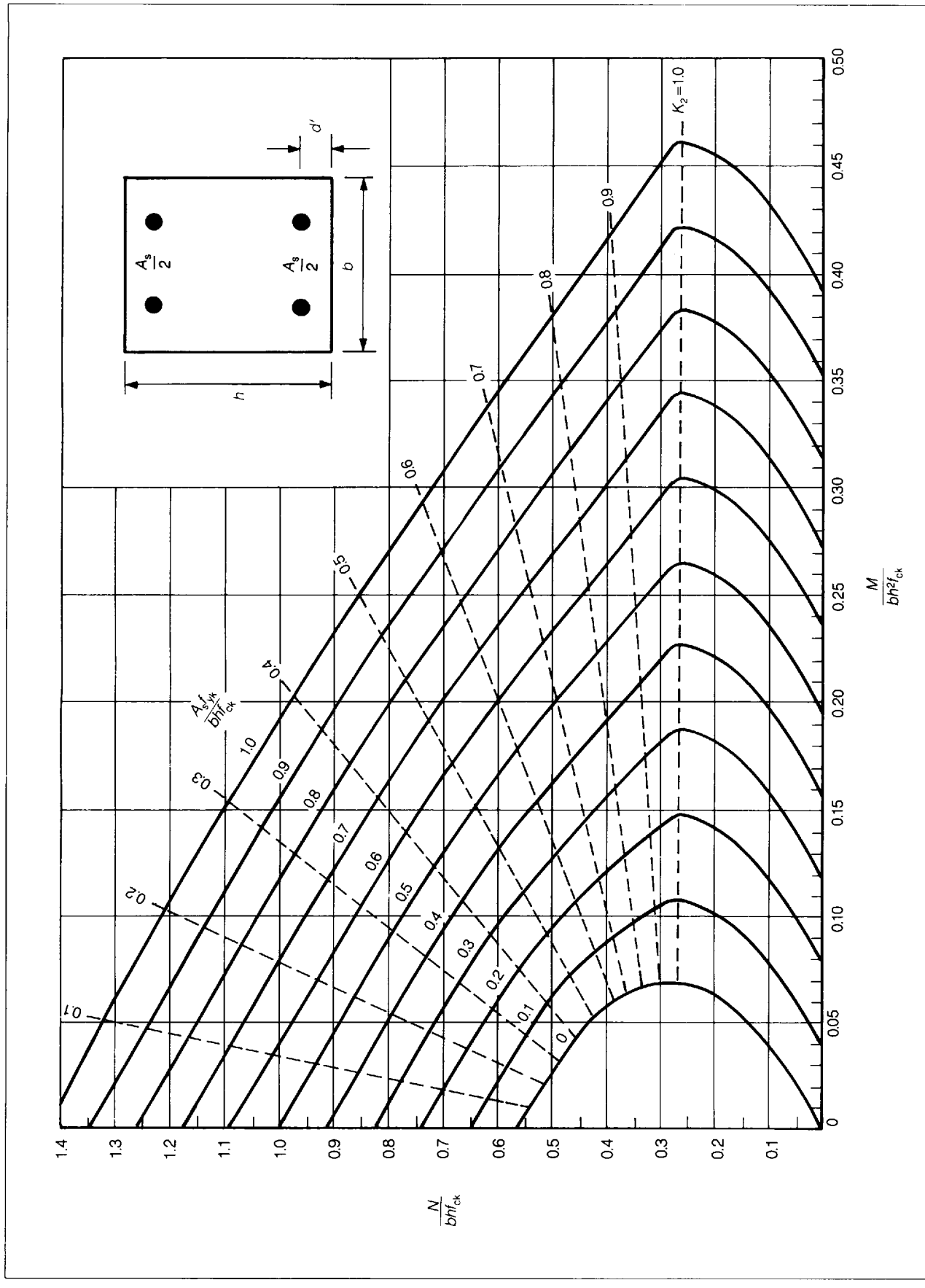

Figure A7 (a) Rectangular columns (d'/h = 0.05)

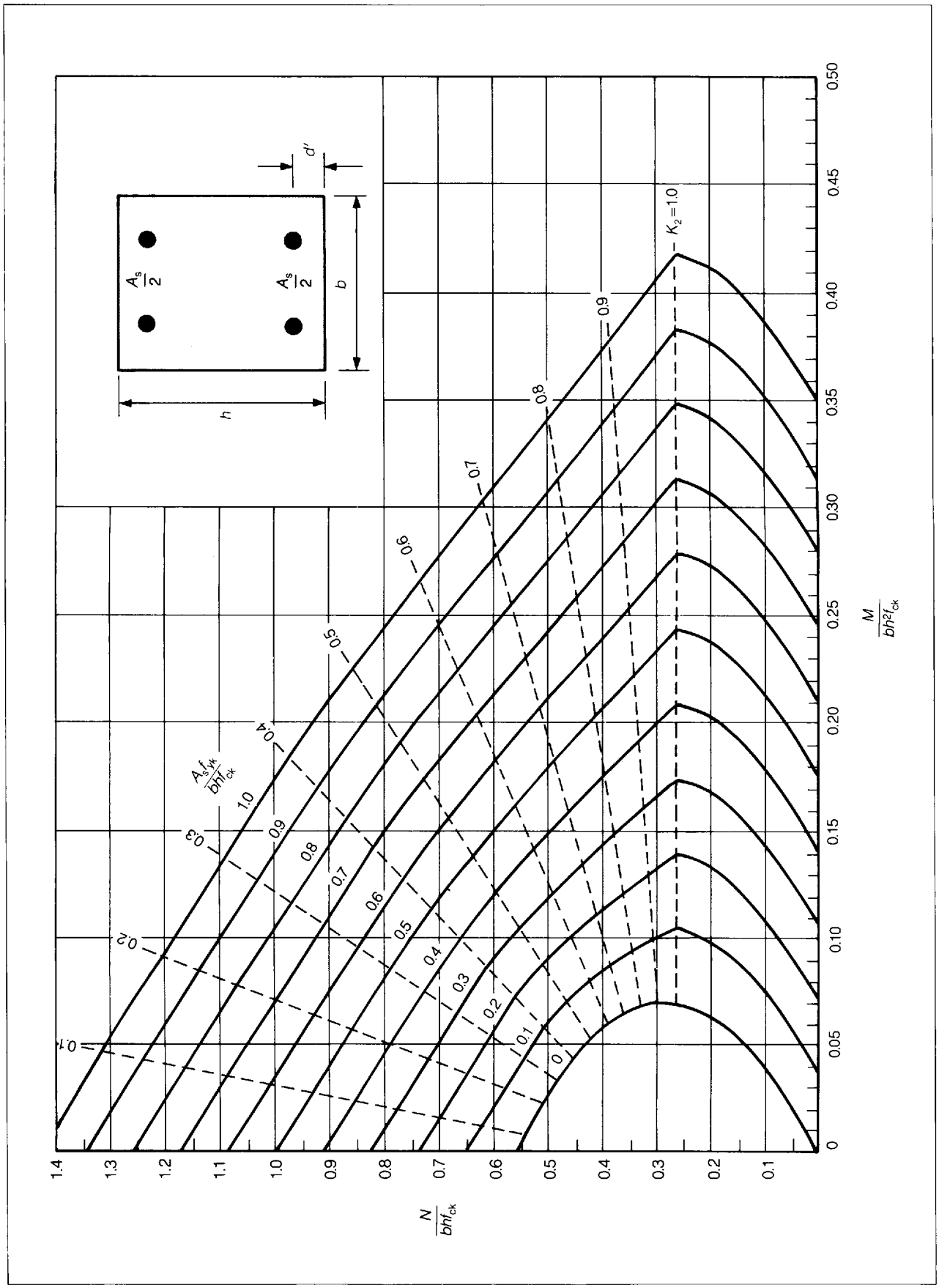

Figure A7 (b) Rectangular columns (d'/h = 0.10)

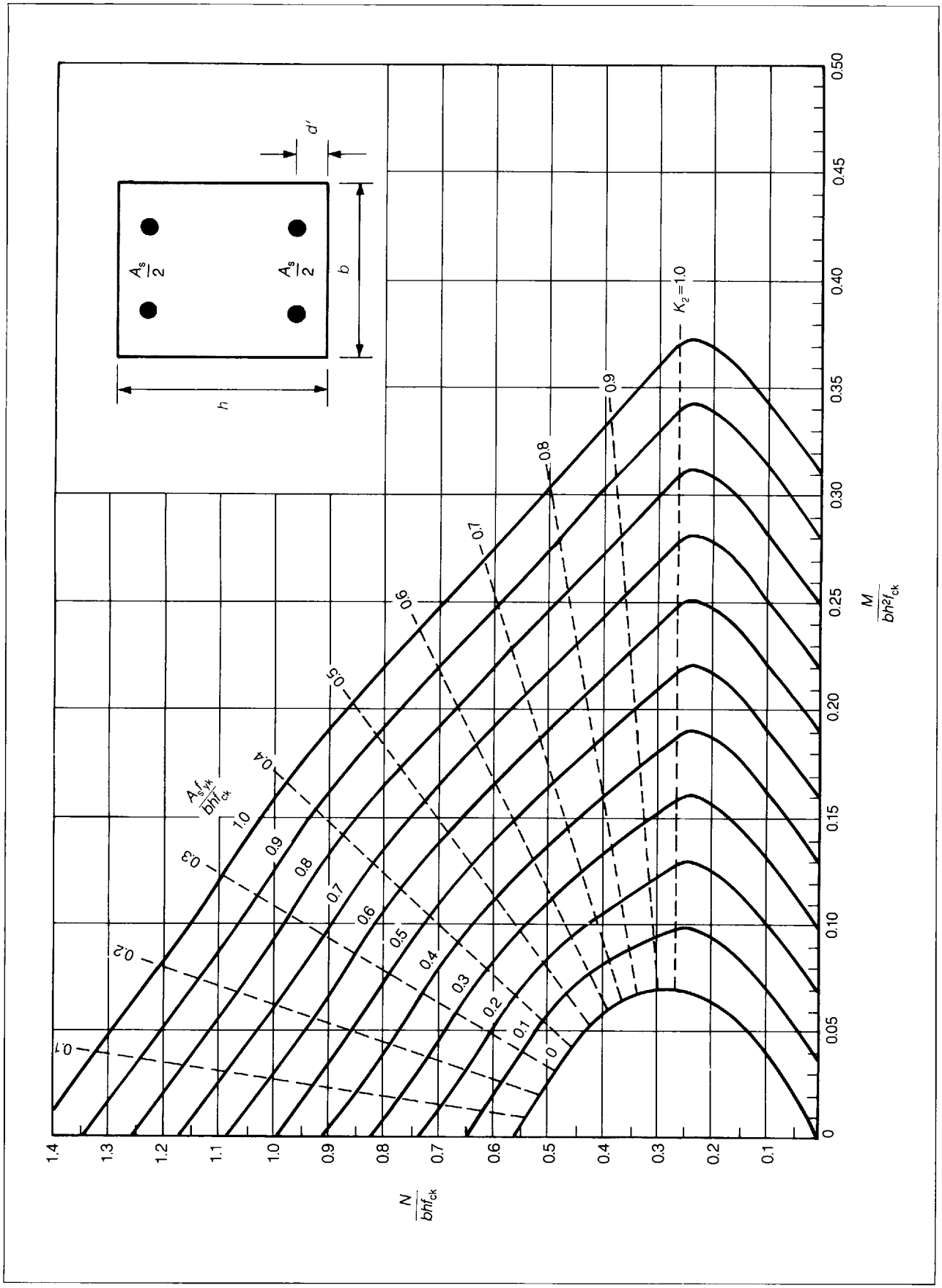

Figure A7 (c) Rectangular columns (d'/h = 0.15)

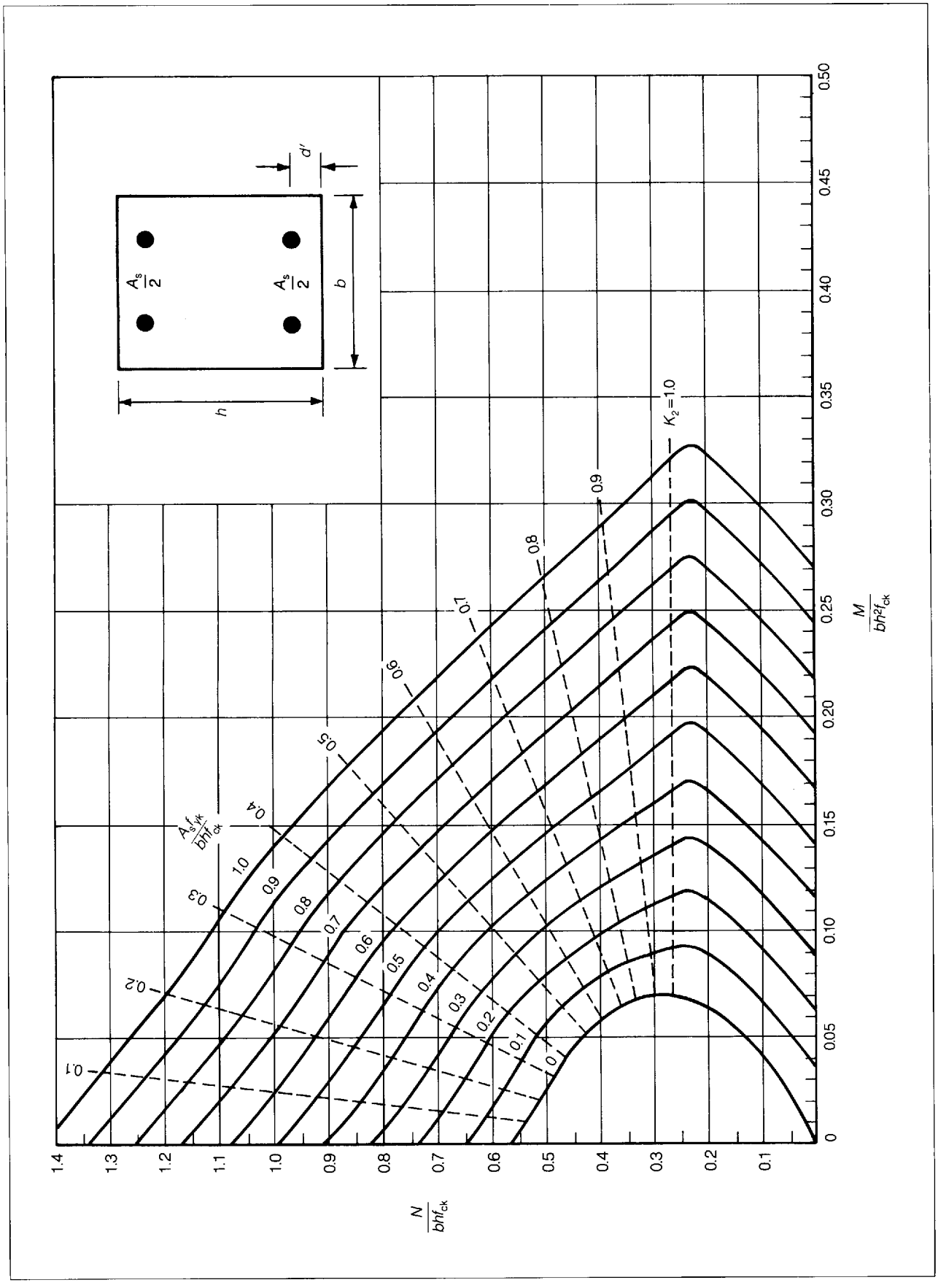

Figure A7 (d) Rectangular columns (d'/h = 0.20)

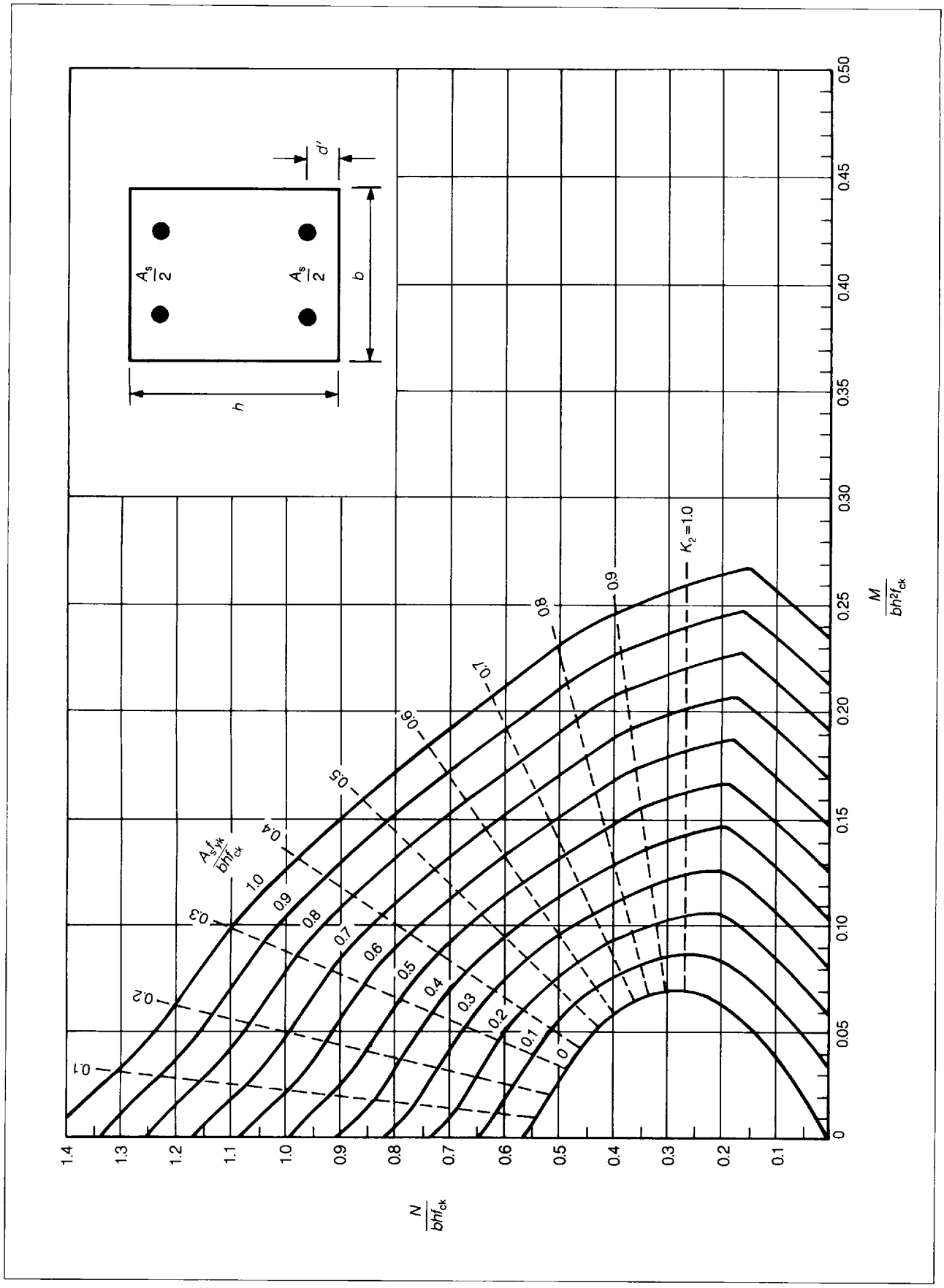

Figure A7 (e) Rectangular columns (d'/h = 0.25)

A4.5 Bi-axially bent rectangular column sections

(1) No simple approach for dealing with bi-axial bending is given in EC2. Two methods are given here that have been shown to provide a reasonable solution. The first method, technically more accurate but less convenient, is taken from CP 110. The second method, taken from BS 8110, is simpler.

(a) A section may be designed for bi-axial bending by checking that the resulting design satisfies Equation A15.

$$(M_x/M_{ux})^{\alpha_n} + (M_y/M_{uy})^{\alpha_n} \leq 1.0 \quad \text{.....(A15)}$$

where

M_x and M_y are the moments, due to ultimate loads, about the major and minor axes, respectively

M_{ux} is the maximum moment capacity, assuming ultimate axial load, N, and bending about the major axis only

M_{uy} is the maximum moment capacity, assuming ultimate axial load, N, and bending about the minor axis only

α_n is related to N/N_{ud} as given in Table A7

where

$$N_{ud} = 0.567 f_{ck} A_c + 0.87 f_{yk} A_s \quad \text{.....(A16)}$$

Table A7 Relationship between N/N_{ud} and α_n

N/N_{ud}	α_n
≤ 0.2	1.0
0.4	1.33
0.6	1.67
≥ 0.8	2.0

(b) A more approximate method is to design for an increased moment about a single axis. The modified moment is given by whichever of Equations 17A or 18A is appropriate.

$$\text{For } M_x/h' \geq M_y/b', \quad M_x' = M_x + \beta\,(h'/b')\,M_y \quad \text{.....(A17)}$$

$$\text{For } M_x/h' < M_y/b', \quad M_y' = M_y + \beta\,(b'/h')\,M_x \quad \text{.....(A18)}$$

h' and b' are as defined in Figure A9, and β is a coefficient obtained from Figure A10.

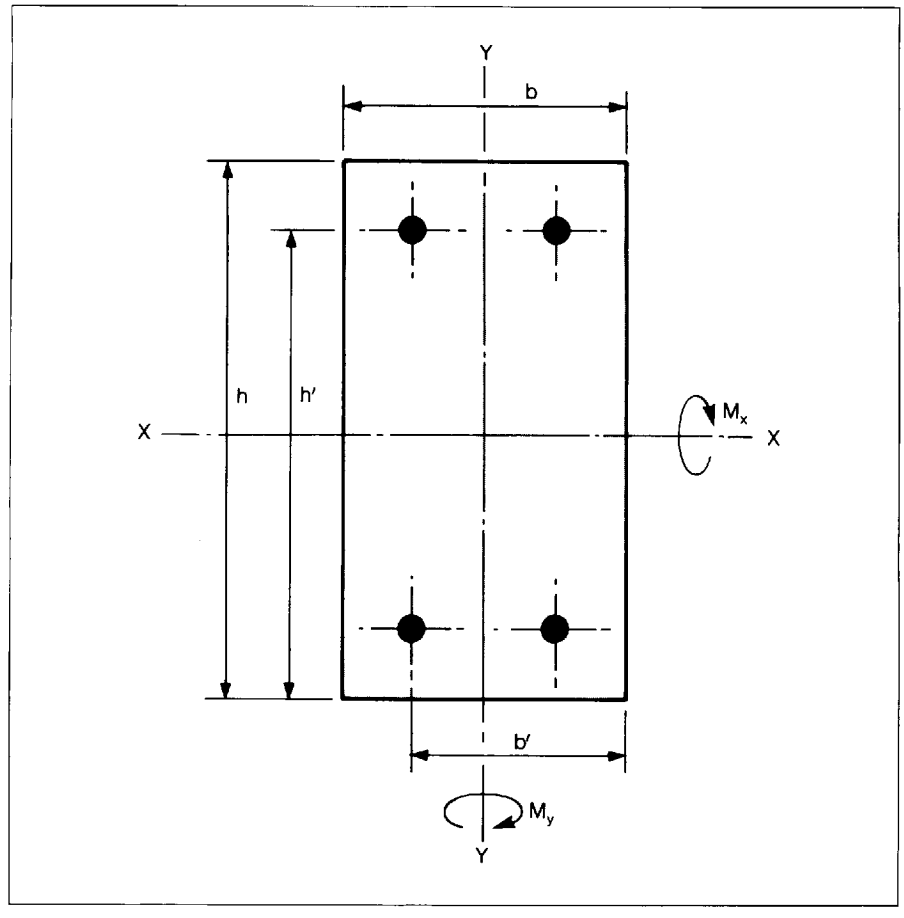

Figure A9 Bi-axially bent column

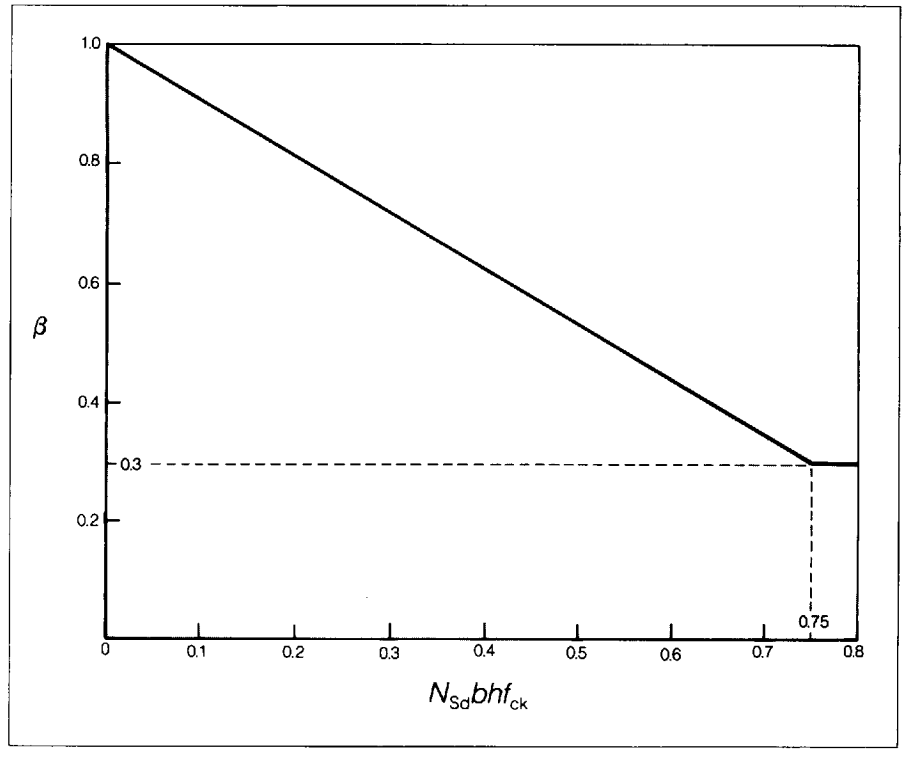

Figure A10 Values of β for use in Equations A17 and A18

A5 Slender columns

A5.1 Effective length of braced columns

(1) The rules, given in Section **5.5.2(2)** for the establishment of the effective length of columns, are a presentation of the equations given in Clause 2.5 of BS 8110: Part 2. Clause 3.8.1.6 of BS 8110: Part 1 provides a set of simplified rules based on these equations. The approach given below should, therefore, remain acceptable for use with EC2.

(2) The effective height, l_o, of a column in a given plane may be obtained from:

$$l_o = \beta l_{col} \quad \text{(A19)}$$

Values of β are given in Table A8 as a function of the end conditions of the column. It should be noted that a column may have a different effective height in the two plan directions.

(3) The end conditions are defined, in terms of a scale from 1 to 3. in Table A8. An increase on this scale corresponds to a decrease in end fixity. An appropriate value can be assessed as follows:

Condition 1. The end of the column is connected monolithically, on both sides, to beams that are at least as deep as the overall dimension of the column in the plane considered. Where the column is connected to a foundation structure, this should be of a form specifically designed to resist moment.

Condition 2. The end of the column is connected monolithically, on both sides, to beams or slabs which are shallower than the overall dimension of the column in the plane considered.

Condition 3. The end of the column is connected to members that are not specifically designed to provide restraint to rotation of the column, but which will provide some nominal restraint.

Table A8 Values of β for braced columns

End condition at top	End condition at bottom		
	1	2	3
1	0.75	0.80	0.90
2	0.80	0.85	0.95
3	0.90	0.95	1.00

A5.2 Estimation of second-order eccentricity (see Section 5.5.3(2))

(1) Table A9 provides values of e_2/K_2d as a function of l_o/d. A value of 460 N/mm^2 has been assumed for f_{yk}.

(2) Values of K_2 can be read from Figures A7(a) to A7(e) by interpolation between the dashed lines.

Table A9 Values of $e_2 / K_2 d$ as a function of l_o / d.

l_o/d	$\frac{e_2}{K_2 d}$	l_o/d	$\frac{e_2}{K_2 d}$
10	0.044	26	0.300
12	0.064	28	0.348
14	0.087	30	0.400
16	0.114	32	0.455
18	0.144	34	0.514
20	0.178	36	0.576
22	0.215	38	0.641
24	0.256	40	0.711

A6 Serviceability

A6.1 Crack control

(1) Figure A11 presents Tables 6.1 and 6.2 in a graphical form.

(2) Where cracking is due to the application of loads, the steel stress may be estimated approximately from

$$f_s = \frac{f_{yk}}{1.15} \frac{G_k + 0.3Q_k}{(1.35G_k + 1.5Q_k)} \frac{1}{\delta}$$

where

δ is the redistributed moment ratio at the ultimate limit state

and where cracking is due to restraint of shrinkage or early thermal movements, from

$$f_s = f_{yk} \frac{A_{s,min}}{A_{s,prov}}$$

where

$A_{s,min}$ is the steel area given in Section **6.2(2)**

(3) For load-induced cracking, either a maximum bar spacing or a maximum bar size, whichever is the more convenient, may be read from Figure A11.

(4) For restraint-induced cracking, a maximum bar size may be read from Figure A11.

A6.2 Deflection control

(1) Figure A12 presents the provisions of Table 6.4 in a graphical form that may be more convenient in some cases.

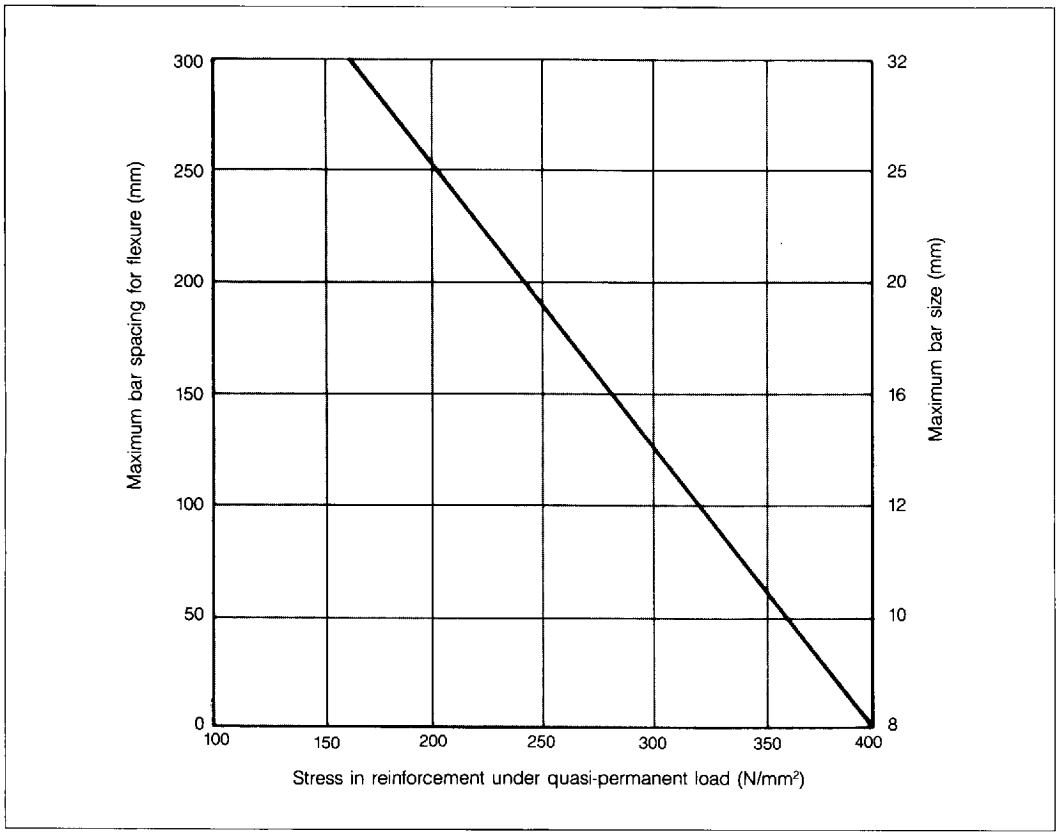

Figure A11 Maximum bar sizes and spacings for crack control

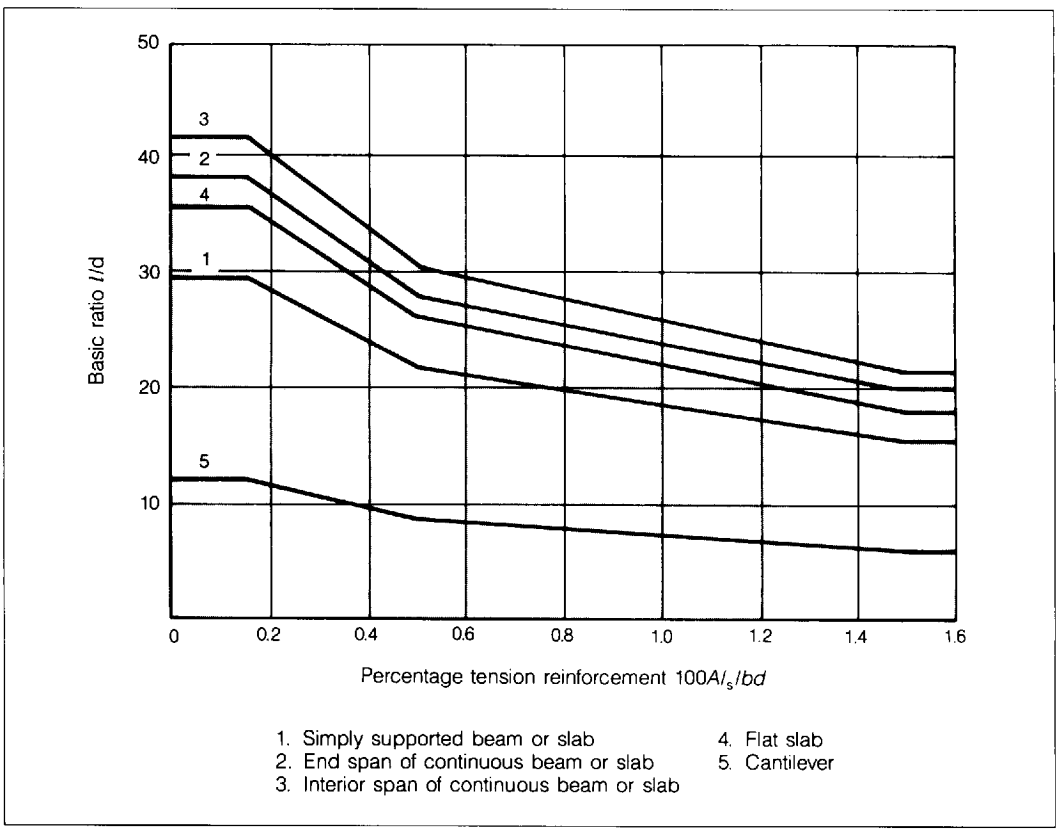

Figure A12 Span/effective depth ratios (f_{yk} = 460 N/mm^2)

A7 Anchorage and lap lengths

(1) Anchorage and lap lengths for type 2 deformed bars are given in Table A10, and for plain bars in Table A11.

Table A10 Anchorage and lap lengths as multiples of bar size. Deformed bars type 2 (f_{yk} = 460 N/mm^2) (1) (2) (3)

Concrete strength f_{ck}, N/mm^2	20	25	30	35	40
Anchorage - straight bars, compression and tension	44	37	34	30	27
Anchorage - curved bars, tension(4)	31	26	24	21	19
Laps - compression and tension (5)	44	37	34	30	27
Laps - tension(6)	62	52	48	42	38
Laps - tension(7)	88	74	68	60	54

Notes to the table:

(a) **General**

1. The values in the table apply to good bond conditions (See Section **7.3**) and to bar sizes $\leq$ 32.
2. For poor bond conditions (see Section **7.3(1)**) the values in the table should be divided by 0.7.
3. For bar sizes > 32, the values should be divided by [(132 − ϕ) / 100], where ϕ is the bar size in mm.

(b) **Specific conditions**

4. In the anchorage region, cover perpendicular to the plane of curvature should be at least 3ϕ.
5. Applicable where **all** of the following conditions are satisfied:
   percentage of bars lapped at the section < 30%
   clear spacing between bars $\geq$ 6ϕ
   side cover to the outer bar $\geq$ 2ϕ.
6. Applicable where **one but not more** of the following conditions are satisfied:
   percentage of bars lapped at the section > 30%
   clear spacing between bars < 6ϕ
   side cover to the outer bar < 2ϕ.
7. Applicable where the **first and one other** of the following conditions are satisfied:
   percentage of bars lapped at the section > 30%
   clear spacing between bars < 6ϕ
   side cover to the outer bar < 2 ϕ.

Table A11 Anchorage and lap lengths as multiples of bar size. Plain bars (f_{yk} = 250 N/mm^2) (1) (2)

Concrete strength, f_{ck}, N/mm^2	20	25	30	35	40
Anchorage - straight bars, compression and tension (not applicable to bar sizes > 8 mm)	50	46	42	39	37
Anchorage – curved bars, tension(3)	35	32	30	28	26
Laps – compression and tension(4)	50	46	42	39	37
Laps - tension(5)	70	64	60	56	52
Laps – tension(6)	100	92	84	78	74

Notes to the table:

(a) General

1. The values in the table apply to good bond conditions.
2. For poor bond conditions (see Section **7.3(1)** the values in the table should be divided by 0.7.

(b) Specific conditions

3. In the anchorage region, cover perpendicular to the plane of curvature should be at least 3ϕ.
4. Applicable where **all** of the following conditions are satisfied:
   percentage of bars lapped at the section < 30%
   clear spacing between bars ≥ 6ϕ
   side cover to the outer bar ≥ 2ϕ.
5. Applicable where **one but not more** of the following conditions are satisfied:
   percentage of bars lapped at the section > 30%
   clear spacing between bars < 6ϕ
   side cover to the outer bar < 2 ϕ.
6. Applicable where the **first and one other** of the following conditions are satisfied:
   percentage of bars lapped at the section > 30%
   clear spacing between bars < 6ϕ
   side cover to the outer bar < 2ϕ.

A8 Simplified rules for the curtailment of reinforcement

A8.1 General

(1) In appropriate circumstances, the simplified rules given in A8.2 and A8.3 may be used, instead of a detailed calculation, for beams subjected to predominantly uniformly distributed loads.

A8.2 Near internal supports in continuous beams

(1) The following rules for the curtailment of top and bottom reinforcement in the region of an internal support may be used for continuous beams, of approximately equal spans, where the characteristic imposed load does not exceed the characteristic permanent load.

(2) For curtailment of top reinforcement, at least 25% of the reinforcement required at the support for the ultimate limit state should be made effectively continuous through the spans. All of the reinforcement needed at the support should extend

into the span for a distance from the face of the support of $0.1l + l_{b,net} + 0.45d$. The anchorage length, $l_{b,net}$, may be taken from Table A10 or Table A11, whichever is appropriate. At least 50% of the reinforcement at the support should extend into the span for a distance from the face of the support of $0.25l + l_{b,net} + 0.45d$.

(3) For curtailment of bottom reinforcement, at least 30% of the reinforcement required at mid-span should extend to the support. The remainder should extend to within a distance of $0.2l - l_{b,net} - 0.45d$ from the centreline of the support.

A8.3 Bottom reinforcement near end supports

(1) At least 50% of the reinforcement required at mid-span should be taken into the support and be anchored in accordance with Section **7.8.2.1 (9)**. A check should be made to ensure that this amount of reinforcement satisfies Section **7.8.2.1 (8)**. The remaining reinforcement should extend to within a distance of $0.15l - l_{b,net} - 0.45d$ of the centreline from the support.

A8.4 Curtailment in slabs

(1) The simplified curtailment rules for continuous slabs, given in BS 8110, which are based on the single load case of all spans loaded, have given a satisfactory performance even though they do not cater for the full extent of negative moment that could arise with alternate spans loaded as required by EC2.

REFERENCES

1. BRITISH STANDARDS INSTITUTION. DD ENV 1992-1-1: 1992. Eurocode 2. *Design of concrete structures.* Part 1. *General rules and rules for buildings* (together with *United Kingdom National Application Document).* xvi, 254 pp. Milton Keynes, BSI, 1992.

2. BRITISH STANDARDS INSTITUTION. BS 8100. *Structural use of concrete.* Part 1: 1985. *Code of practice for design and construction.* 124 pp. Part 2: 1985. *Code of practice for special circumstances.* 52 pp. Part 3: 1985. *Design charts for singly reinforced beams, doubly reinforced beams and rectangular columns.* 112 pp. Milton Keynes, BSI.

3. BRITISH STANDARDS INSTITUTION. *Eurocode 2. United Kingdom National Application Document.* Included in reference 1.

4. BRITISH STANDARDS INSTITUTION. BS 6399. *Loading for buildings.* Part 1: 1984. *Code of practice for dead and imposed loads.* 16 pp. Part 3: 1988. *Code of practice for imposed roof loads.* 28 pp. Milton Keynes, BSI.

5. BRITISH STANDARDS INSTITUTION. CP 3. *Code of basic data for the design of buildings.* Chapter V. *Loading.* Part 2: 1972. *Wind loads.* 64 pp. Milton Keynes, BSI.

6. BRITISH STANDARDS INSTITUTION. DD ENV 206: 1992. *Concrete – Performance, production, placing and compliance criteria.* 40 pp. Milton Keynes, BSI.

7. INTERNATIONAL STANDARDS ORGANISATION. ISO Technical Committee 72. *Concrete and reinforced concrete structures – Classification of environmental conditions.* Geneva, ISO. Draft proposal ISO/DP 9690.

A1. BRITISH STANDARDS INSTITUTION. CP 110. *The structural use of concrete.* Part 1: 1972. *Design, materials and workmanship.* 154 pp. Milton Keynes, BSI. (Out of print. Replaced by BS 8110 – see reference 2).

A2. EUROPEAN COMMITTEE FOR STANDARDIZATION. *Steel for the reinforcement of concrete – weldable ribbed reinforcing steel B 500 – technical delivery condition for bars, coils and welded fabric.* Brussels, CEN. Draft prEN 10080, 1991. 54 pp. (Issued by BSI as a draft for comment, document no. 91-44813DC, 1991).

Concise Eurocode for the design of concrete buildings

BRITISH CEMENT ASSOCIATION PUBLICATION 43.504

CI/SfB

UDC
624.012.4:006.77

BETTER BUILT IN
concrete