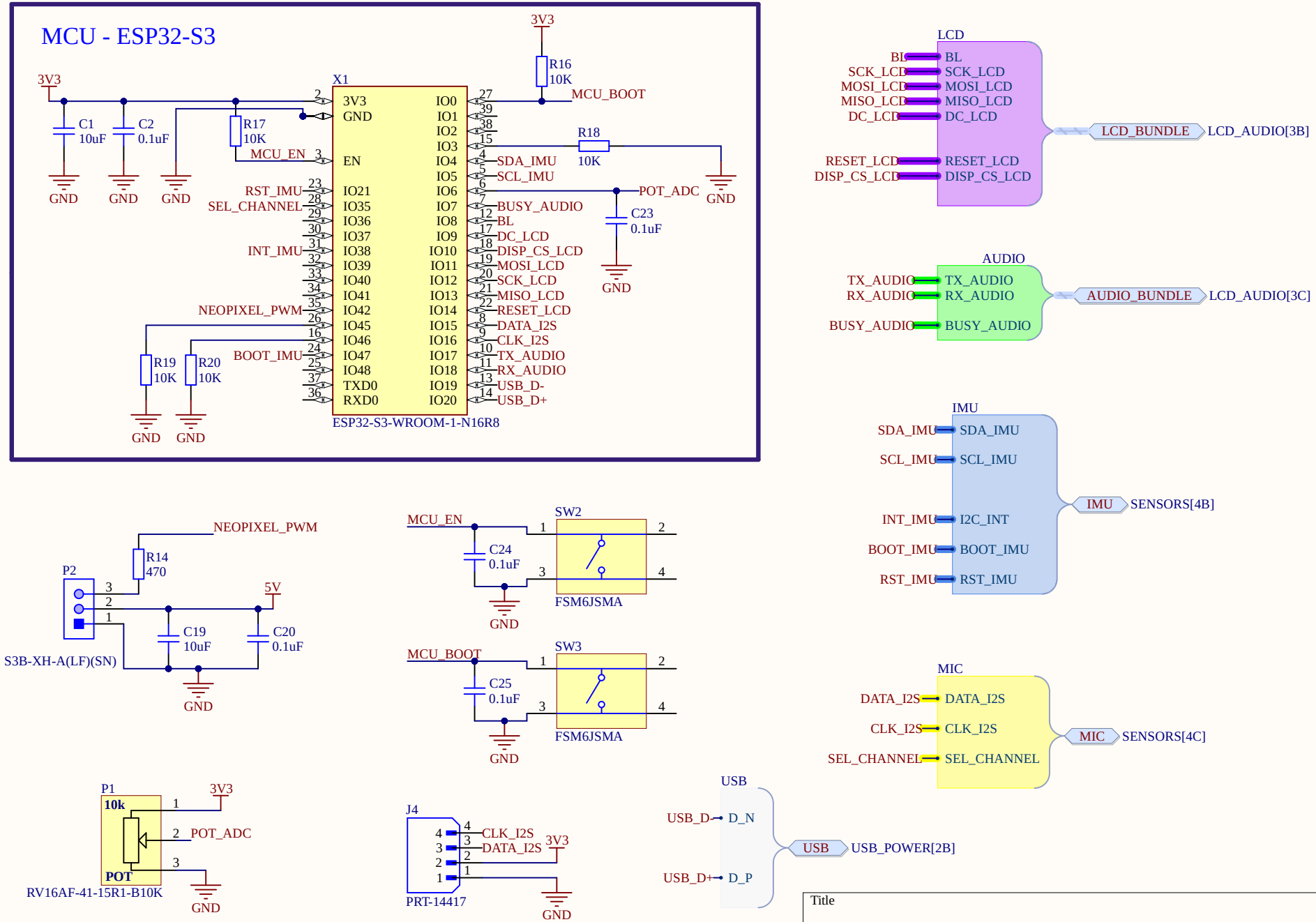


| Title | | |
|---|---|---|
| Size A | Number | Revision |
| Date: 3/31/2026 | | Sheet of |
| File: C:\Users\..\MCU.SchDoc | | Drawn By: |

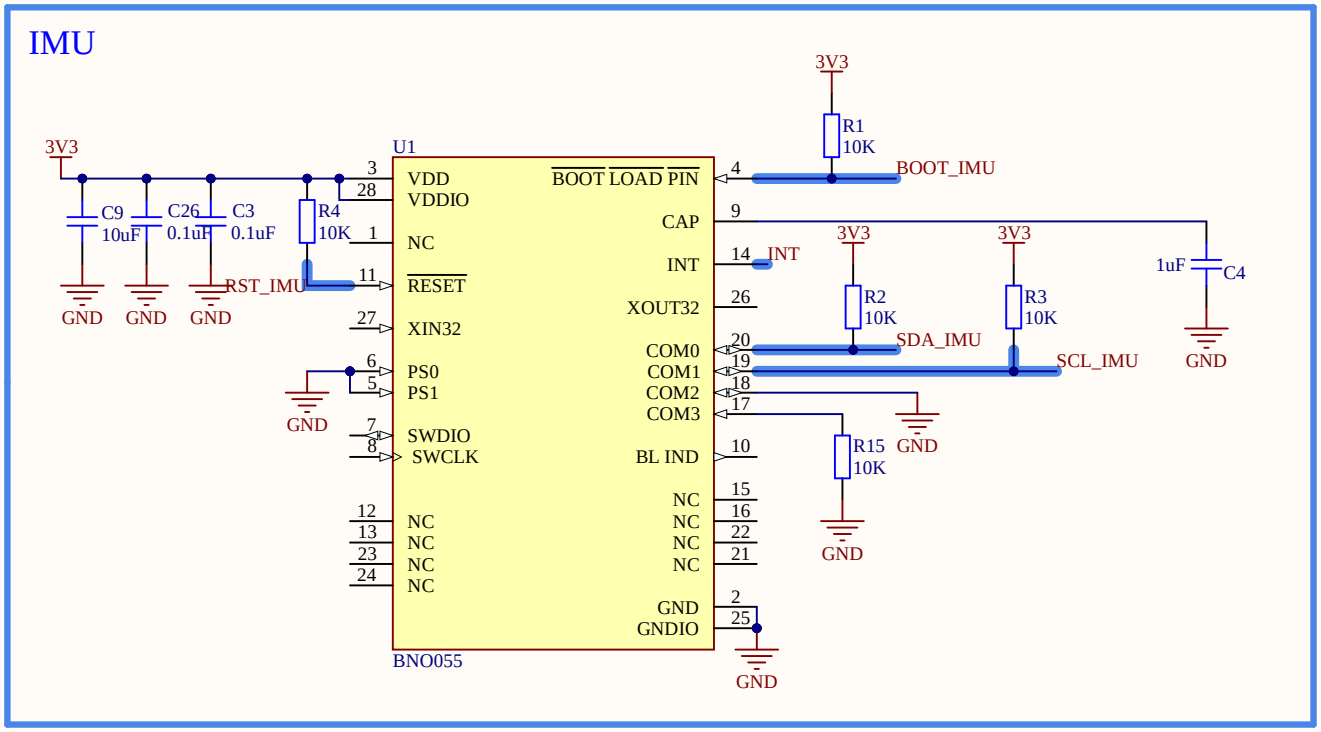


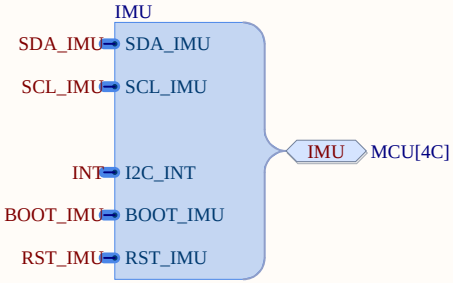


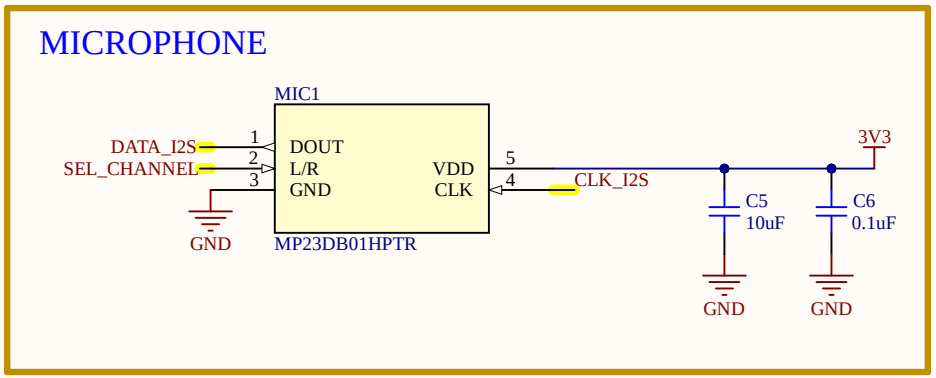


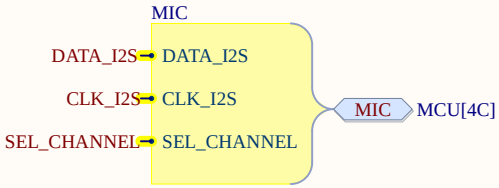


| Title | | |
|---|---|---|
| Size A | Number | Revision |
| Date: 3/31/2026 | | Sheet of |
| File: C:\Users\..\SENSORS.SchDoc | | Drawn By: |

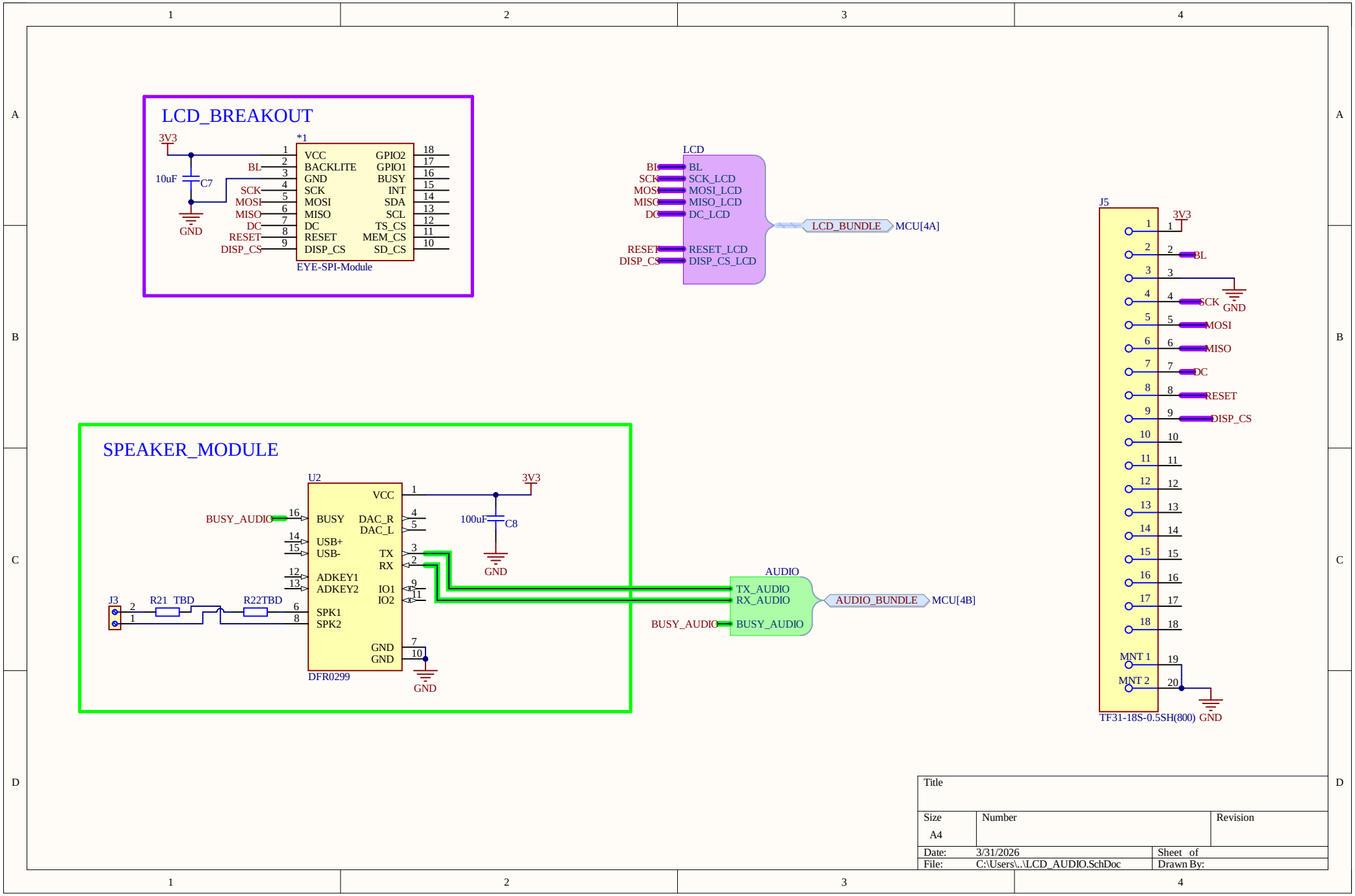


| Title | | |
|---|---|---|
| Size A4 | Number | Revision |
| Date: 3/31/2026 | | Sheet of |
| File: C:\Users\..\LCD_AUDIO.SchDoc | | Drawn By: |

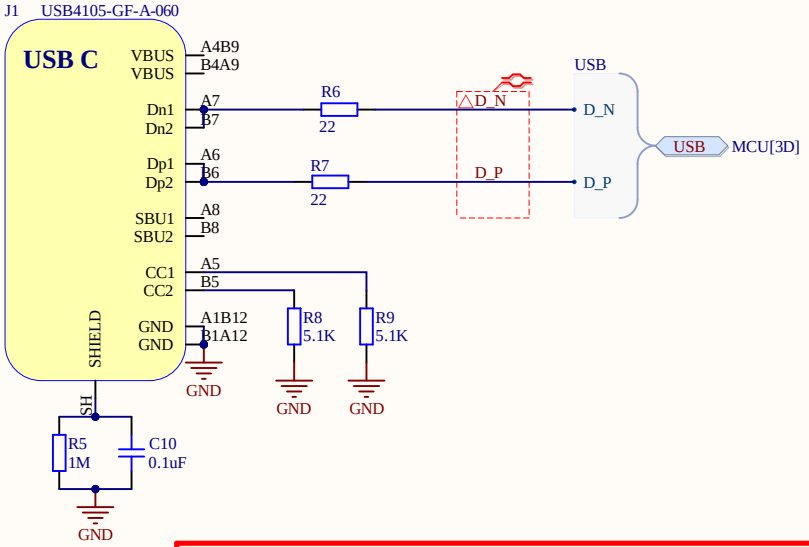


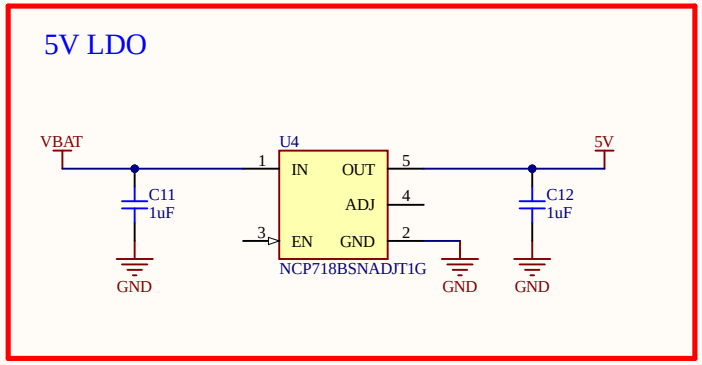


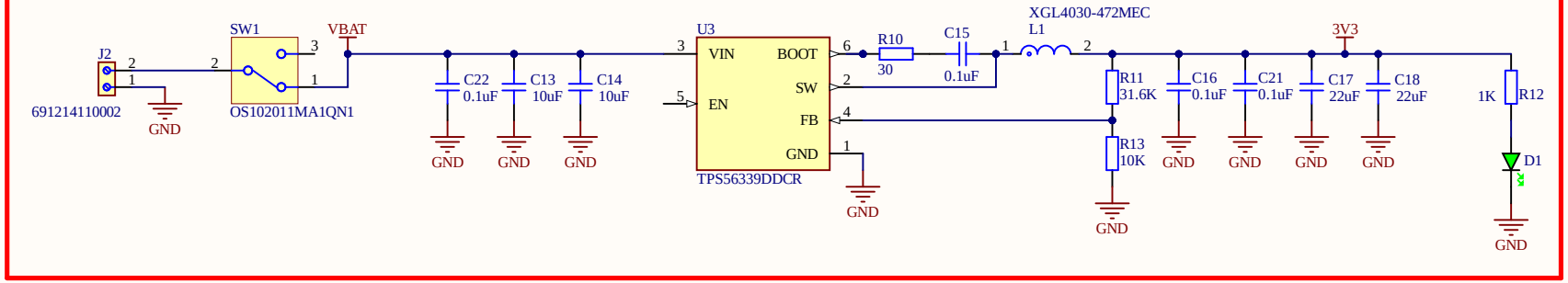


| Title | | |
|---|---|---|
| Size A4 | Number | Revision |
| Date: 3/31/2026 | | Sheet of |
| File: C:\Users\..\USB_POWER.SchDoc | | Drawn By: |

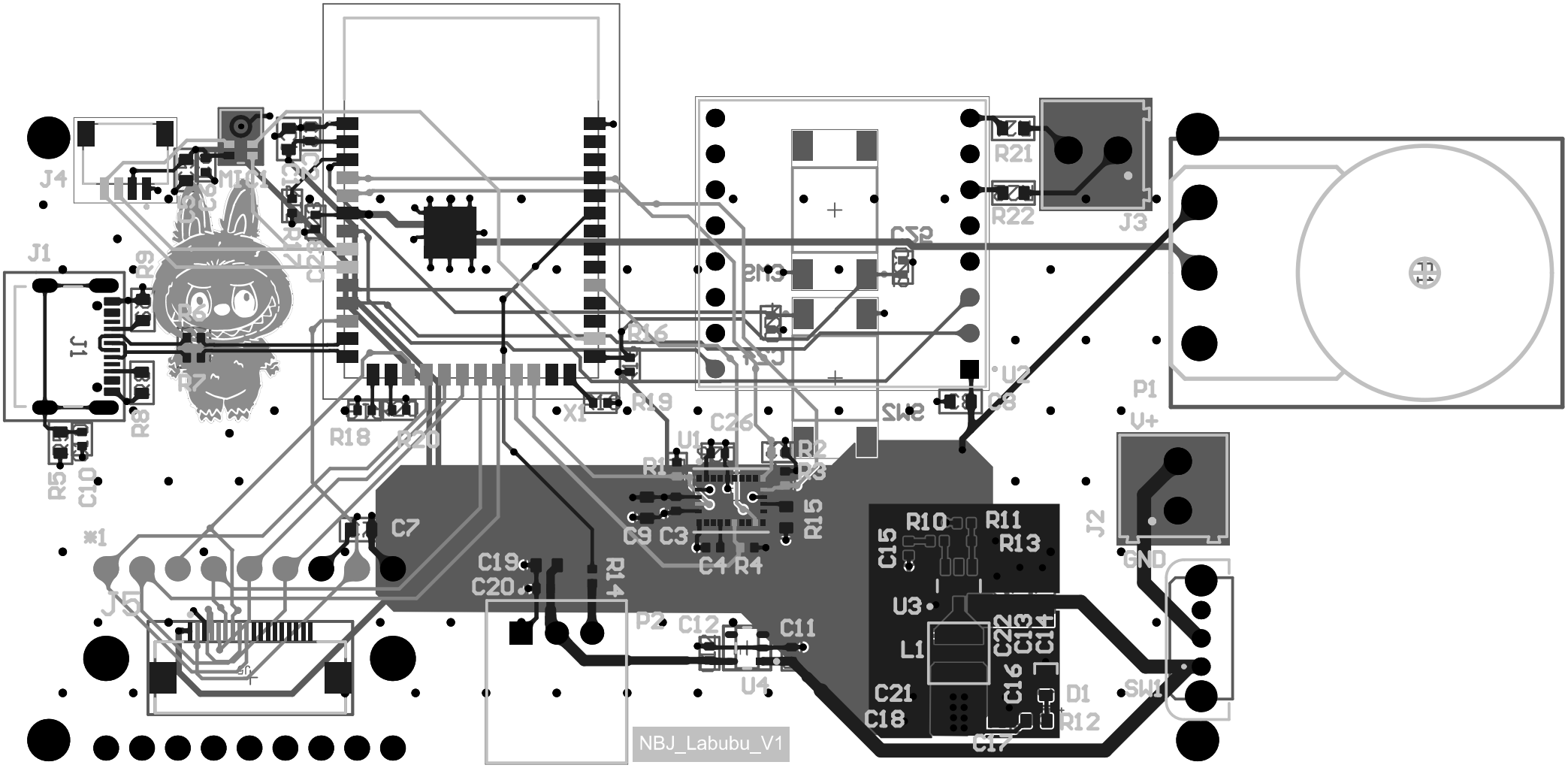
J4
J1
J1
R9
R6
R7
R8
R5
C10
MIC1
C2
R18
R20
C7
J5
C19
C20
R14
X1
R19
R16
C26
U1
R1
R2
R3
R15
C9
C3
C4
R4
P2
C12
C11
U4
R21
R22
J3
C32
U2
C8
P1
V+
J2
GND
SW1
R10
R11
R13
C15
U3
L1
C22
C13
C14
C16
C21
C18
C17
D1
R12
NBJ_Labubu_V1