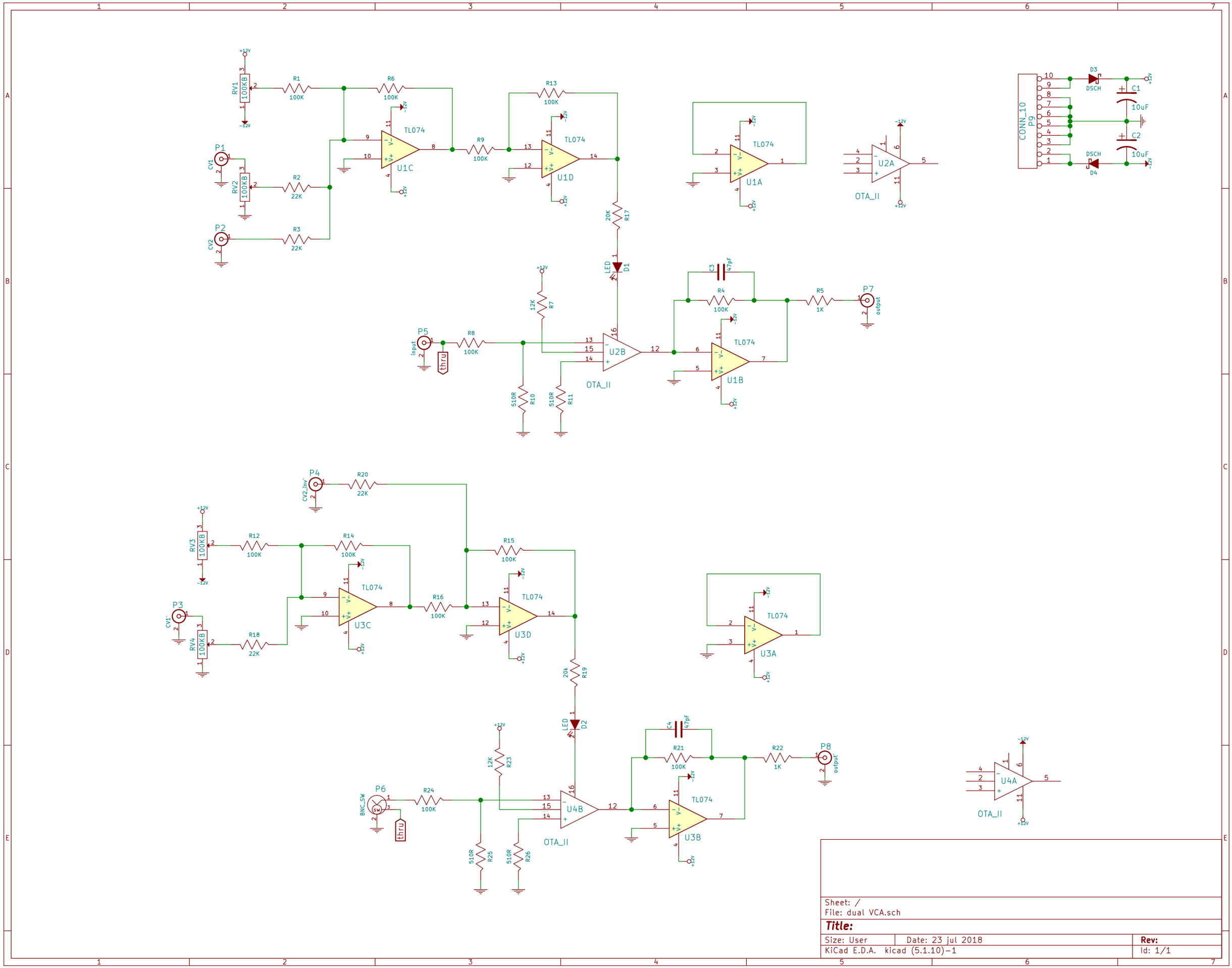

Sheet: /
File: dual VCA.sch

Title:

Size: User	Date: 23 jul 2018	Rev:
KiCad E.D.A. kicad (5.1.10)-1		Id: 1/1