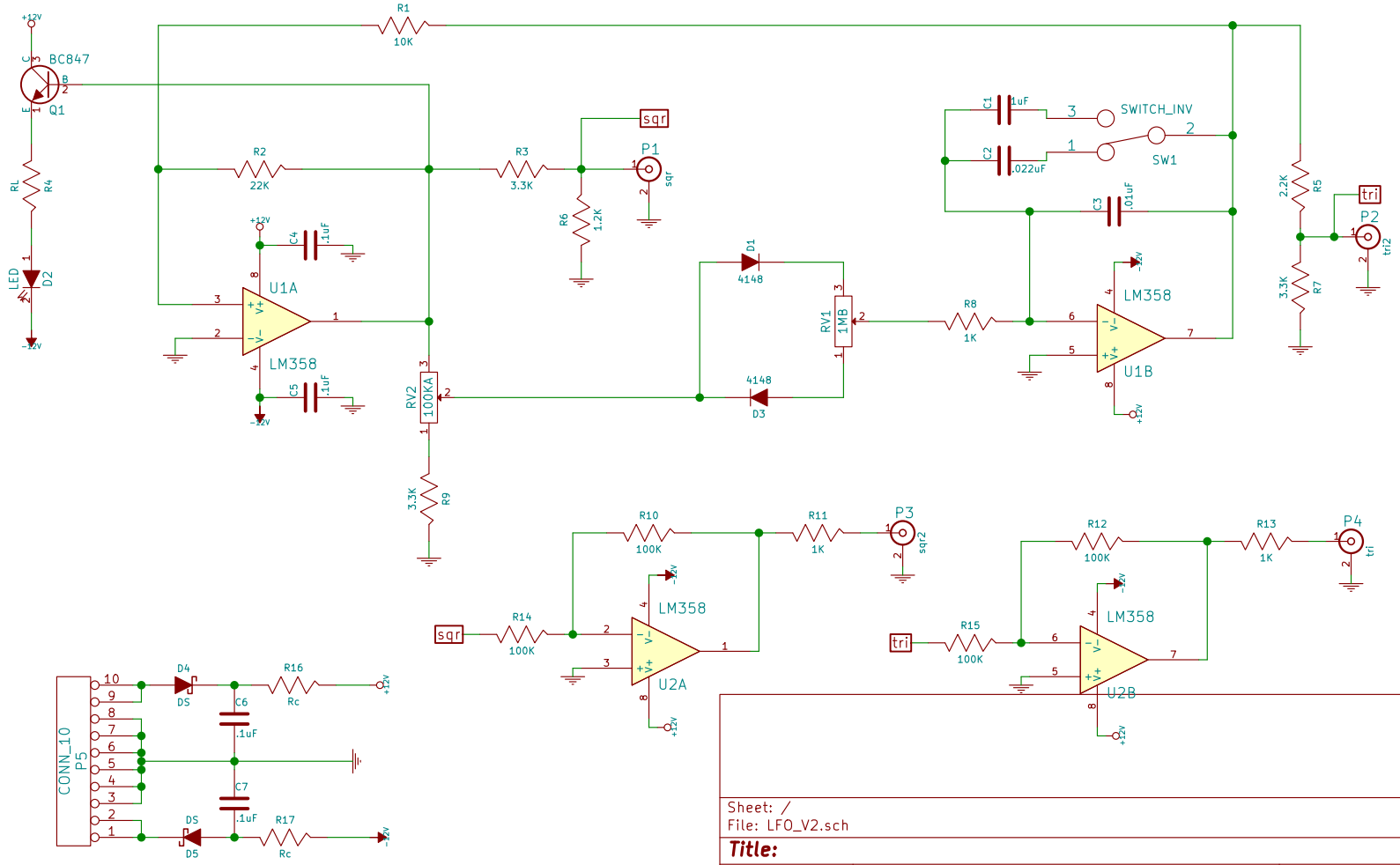

Sheet: /
File: LFO_V2.sch

Title:

Size: User	Date: 3 apr 2017	Rev:
KiCad E.D.A. kicad (5.1.10)-1		Id: 1/1